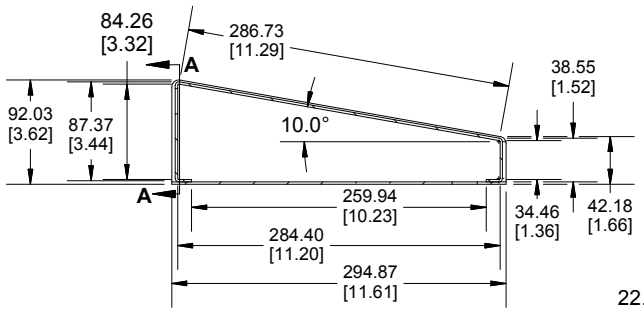

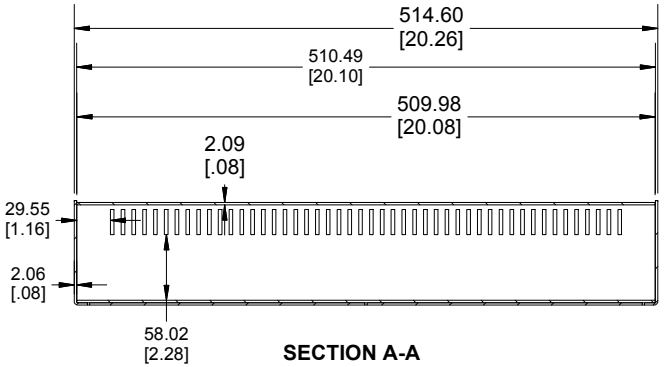

SECTION A-A

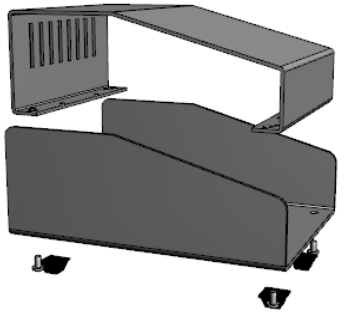

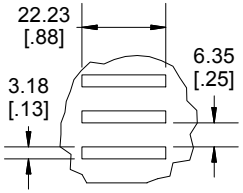

DETAIL B

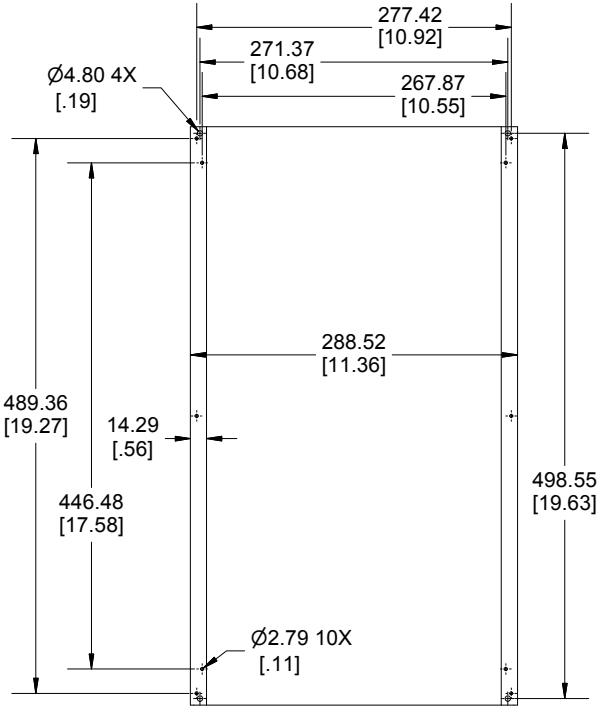

TOP PANEL - BOTTOM VIEW

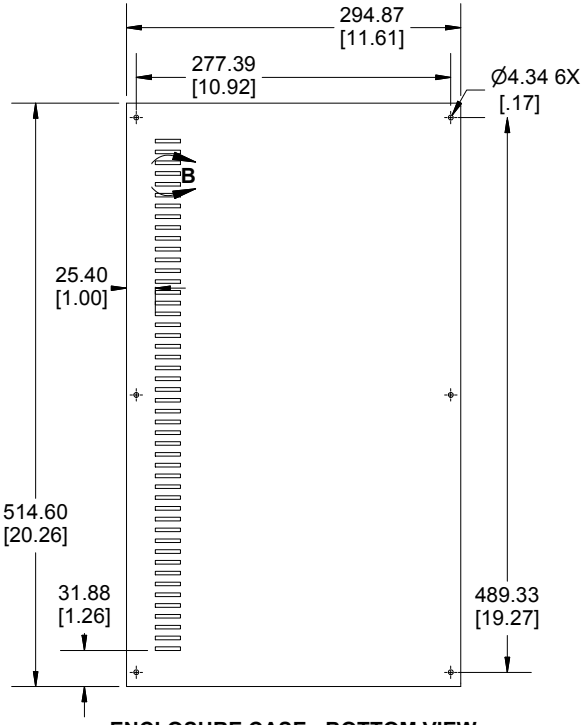

ENCLOSURE CASE - BOTTOM VIEW

Enclosures can be Factory Modified (Milling, Drilling, Printing etc.)
Contact Factory mjm@hammondmfg.com for quotes
Solid models of this enclosure available in STEP or IGES.
(Part number and text placement/orientation on our products are subject to change, we do not recommend using them as a locating reference for modification purposes)

NOTE
Purchased assembly includes case, cover, 6 cover screws, and 4 rubber feet. Case made from 12 Gauge aluminum (.081"),Top made from 12 Gauge aluminum (.081").
Recommended screw torque 150-175 cN-m (13.3-15.5 lbf-in)

1456	
1456WL1 Regular Enclosure	
Beige Top / Blue Case	1456WL1WHBU
Black Top / Blue Case	1456WL1BKBU
Black Top / Black Case	1456WL1BKBK
ACCESSORIES	
Natural Finish Cover Screws (Pkg 6) [6-32 x 1/4" Self-Tapping Screws]	1421J6
Black Cover Screws (Pkg 6) [6-32 x 1/4" Self-Tapping Screws]	1421J6BK
Rubber Feet [0.5 x 0.5" Self-adhesive] (Pkg 24)	1421T3

Dimensions:
mm
[inches]

HAMMOND MANUFACTURING®

1456WL1

www.hammondmfg.com