FAST MOVING TECHNOLOGY

Branch connector MC4-Evo 2

Solarline | Connectors for renewable energy

EN



Branch connector MC4-Evo 2

World's first dual certified DC 1500 V branch connector

- Plug-and-play: no crimping or torqueing necessary
- Versatility and compact dimensions
- Mating compatibility with original MC4 and MC4-Evo 2 cable connectors
- DC 1500 V according to IEC 62852 and UL 6703
- Resistance to salt mist spray
- Proven MULTILAM Technology with high long-term stability which ensures consistently low performance loss throughout the entire service life of the connector

PV-AZB4-EVO 2-UR



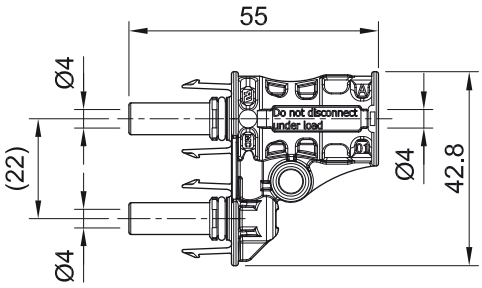

PV-AZS4-EVO 2-UR



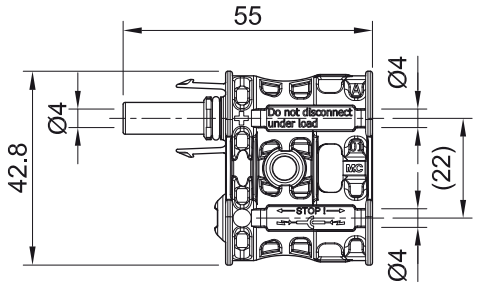

Order No.	Type	Description
32.0196	PV-AZB4-EVO 2-UR	Branch socket MC4-Evo 2
32.0197	PV-AZS4-EVO 2-UR	Branch plug MC4-Evo 2

Accessories

32.0716	PV-BVK4	Sealing cap, suitable for socket side
32.0717	PV-SVK4	Sealing cap, suitable for plug side
32.6066	PV-MS-MC4-EVO	Unlocking tool

MA

Assembly Instructions MA292

www.staubli.com/electrical

Technical data	
Rated voltage	**DC 1500 V (according to IEC 62852: 2014 + AMD1:2020)** **DC 1500 V (according to UL 6703)**
Test voltage	**8 kV** [2)]
Rated impulse voltage	**16 kV**
Rated current IEC	**60 A** [1)]
Rated current UL	**50 A** [1)]
Ambient temperature range (IEC) Ambient temperature range (UL)	**-40 °C ... + 85 °C** **-40 °C ... + 90 °C**
Upper limiting temperature IEC	**115 °C** [1)]
Degree of protection, mated unmated	**IP65 / IP68 (1 m , 1 h)** **IP2X**
Pollution degree	**3**
Contact resistance of plug connectors	**< 0,5 mΩ**
Safety class	**II**
Contact system	**MULTILAM**
Contact material	**Copper, tin plated**
Insulation material	**PA**
Locking system	**Locking type**
Flame class	**UL94-V0**
Salt mist spray test, degree of severity 6, according to IEC 60068-2-52	**Yes**
UV resistance (according to ISO 4892-2/3)	**Yes**
TÜV Rheinland certified according IEC62852:2014+AMD1:2020	**R 60149724**
UL certified according UL6703	**E343181**
Compatible with connector type	**Original MC4** **Original MC4-Evo 2**
Maximum altitude above sea level for operation	**5000 m; AK 60159400**
CE	**CE declaration of conformity**

1) The voltage and current rating, as well as the upper limiting temperature are limited to the MC4-Evo 2 branch connector. For detailed specification refer to MA292.

2) Rated voltage 1000 V and test voltage 6 kV
Rated voltage 1500 V and test voltage 8 kV

Application example with MC4-Evo 2 branch connectors [3)]

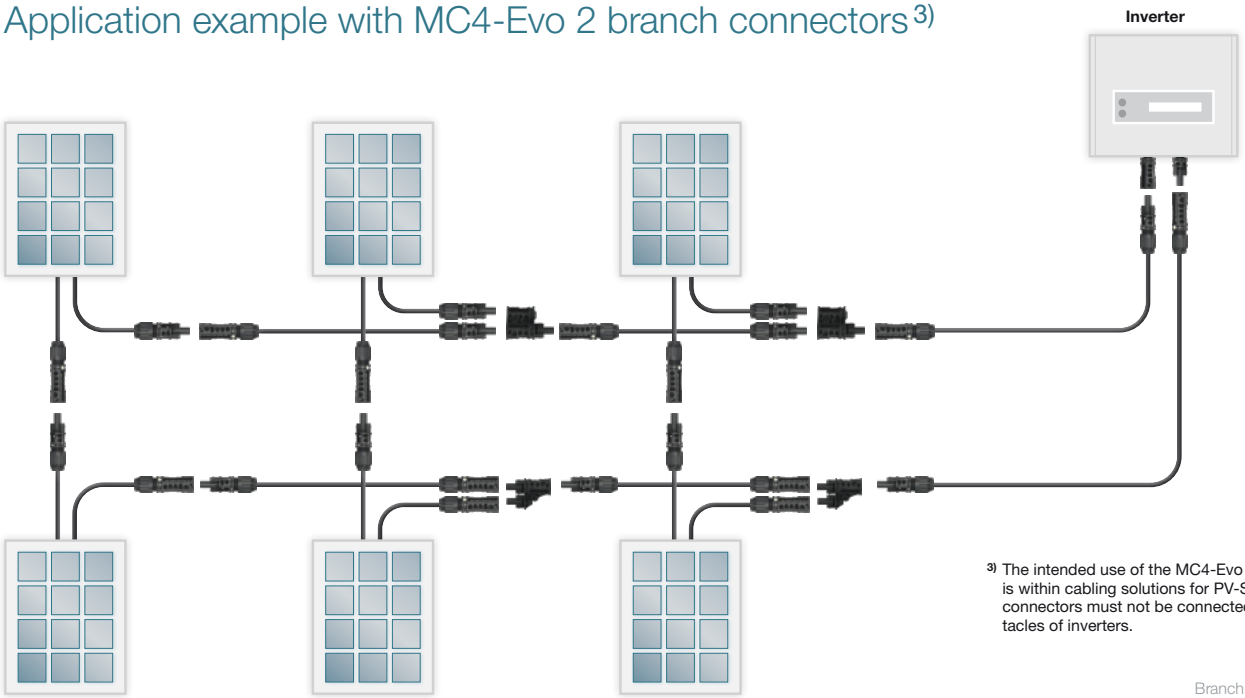

3) The intended use of the MC4-Evo 2 branch connector is within cabling solutions for PV-Systems. Yet, branch connectors must not be connected directly to panel receptacles of inverters.

PV Sol Branch Connector MC4-Evo 2 11014100-en C 06.2022



● Stäubli Units ○ Representatives/Agents

Global presence of the Stäubli Group

www.staubli.com

Staubli is a trademark of Stäubli International AG, registered in Switzerland and other countries.
We reserve the right to modify product specifications without prior notice. © Stäubli 2022.
ec.marcom@staubli.com | Photo credits: Stäubli

STÄUBLI