Top View of Assembly

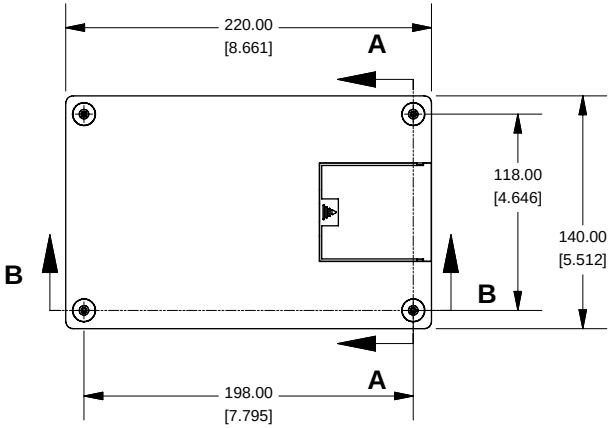

SECTION A-A
End View of Assembly

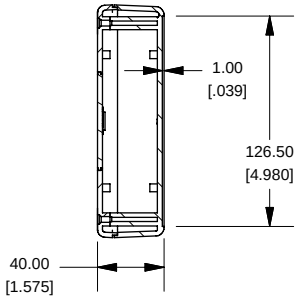

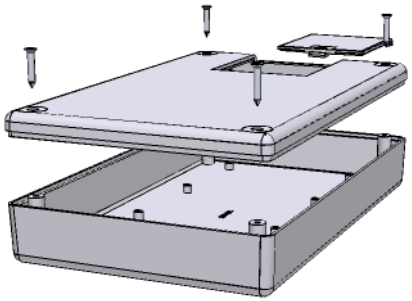

SECTION B-B
Side View of Assembly

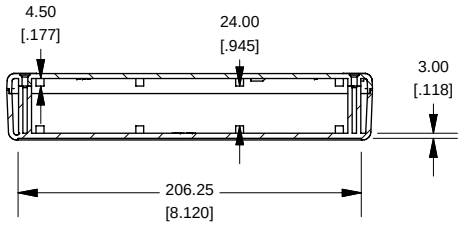

Top View Looking Inside Box

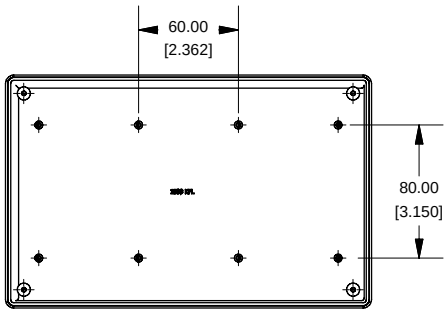

Lid

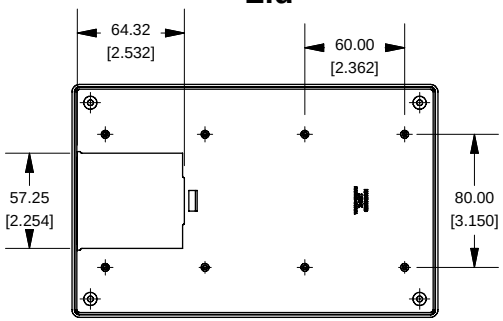

Maximum P.C. Board Size

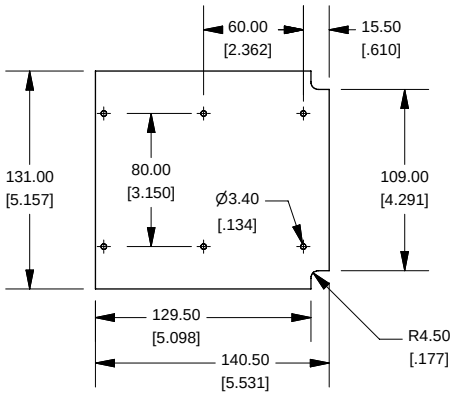

Enclosures can be Factory Modified (Milling, Drilling, Printing etc.)
Contact Factory mjm@hammondmfg.com for quotes
Solid models of this enclosure available in STEP or IGES.

NOTE
Purchased assembly includes box, lid and 4 cover screws. Flame retardant ABS carries UL flammability rating of 94 V-0. Various Battery holder kits available.

PART NUMBERS	
1599K Fire Retardant ABS	
Black FR-ABS	1599KBKBAT
Grey FR-ABS	1599KGYBAT
1599K High Impact Polystyrene	
Black GP-ABS	1599KSBKBAT
Grey GP-ABS	1599KSGYBAT
ACCESSORIES	
Cover Screws for FR-ABS (Pkg 100) [M3 - 0.5 x 20mm Nickel Plated Machine Screws]	1591MS100
Cover Screws for GP-ABS (Pkg 100) [#4 x 3/4" Stainless Steel Self Tapping Screws]	1598TS100
P.C Board Mounting Screws (Pkg of 50 or 100) [#4 x 1/4" Self Tapping Screws]	1593ATS50 1593ATS100

HAMMOND MANUFACTURING™

1599KBAT

www.hammondmfg.com