

Breakers and Switches

Switches
Switch-disconnectors
OT, OETL, OTDC and OTM

Power and productivity
for a better world™

Switch-disconnectors
OT 16...2500, OETL 3150, OTDC16...32 and OTM160...2500

Contents

4 Product overview, features

8 Technical data

19 Ordering information, manual operation
19 Front operated switch-disconnectors OT, OETL, OTDC
32 Side operated switch-disconnectors OT
33 Earthing switches OT

35 Ordering information, motorized operation
35 Motorized switch-disconnectors OTM

37 Accessories, selection overview

40 Ordering information, accessories
40 Optional handles and handle accessories
50 Shafts and shaft accessories
54 Auxiliary contacts
58 Fourth poles and neutral/earth links
60 Terminal shrouds
62 Phase barriers and spare handle/fuse storage (for OTM)
63 Connecting accessories
66 Conversion kits
69 Motor operator, locking and mounting accessories
70 Interlocking

73 Dimension drawings
73 Manual operation
95 Motorized operation
99 Accessories

106 Contact functions

108 Index

Switch-disconnectors 16...3150 Amperes
High performance, compact solution

Manual operation



IEC	OTDC16F	OT16F	OT63F	OT100F	OT160EV		OT315E
	OTDC25F	OT25F	OT80F	OT125F	OT200E		OT400E
	OTDC32F	OT40F			OT250E		
UL		OT16F	OT63F	OT30F		OT200U	
		OT25F	OT80F	OT60F			
		OT40F		OT100F			

Switch size	**16 25 32**	**16 25 40**	**63 80**	**30 60 100 125**	**160 200 250**	**200**	**315 400**
IEC I_{th} [A]	25 32 45	25 32 40	63 80	115 125	160 200 250		315 400
I_e /AC22A, 415V [A]		16 25 40	63 80	100 125	160 200 250		315 400
I_e /AC23A, 415V [A]		16 20 23	45 75	80 90	160 200 250		315 400
I_e /DC21, 660V [A]	16 25 32	16 25 25			160 200 250		
I_e /DC21, 1000V [A]	16 25 32				160 200 250		315 400
I_e /DC21, 1200V [A]	16 25 32						
UL Ampere rating [A]		20 30 40	60 80	30 60 100		200	

Motor operation



IEC	OTM160E	OTM315E
	OTM200E	OTM400E
	OTM250E	

Switch size [A]	**160 200 250**	**315 400**

Accessories

Optional handles	N & PE terminals
Extended shafts	Terminal shrouds
Legend plates	Connecting accessories
Auxiliary contacts	Conversion kits
Fourth poles	Locking accessories



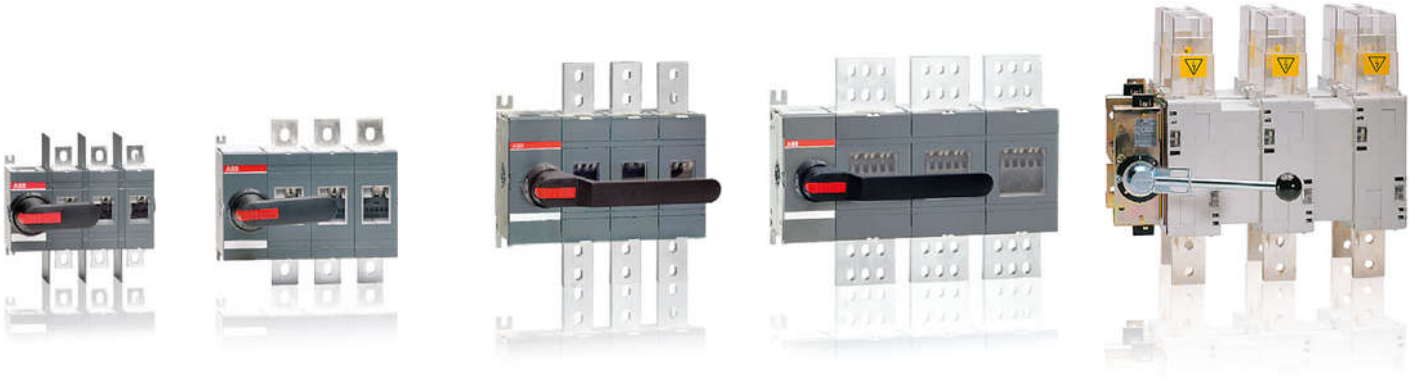

	OT630E	OT1000E	OT2000E	OETL3150K
	OT800E	OT1250E	OT2500E	
		OT1600E		
OT400U	OT600U	OT800U		OETL-NF1600
		OT1200U		OETL-NF2000

400		**600**	**630**	**800**	**800**	**1000**	**1200**	**1250**	**1600**	**2000**	**2500**	**1600**	**2000**	**3150**
			630	800		1000		1250	1600	2000	2500			3150
			630	800		1000		1250	1600	2000	2500			
			630	800		1000		1250	1600					
			600											

400	600	800	1200			1600 2000

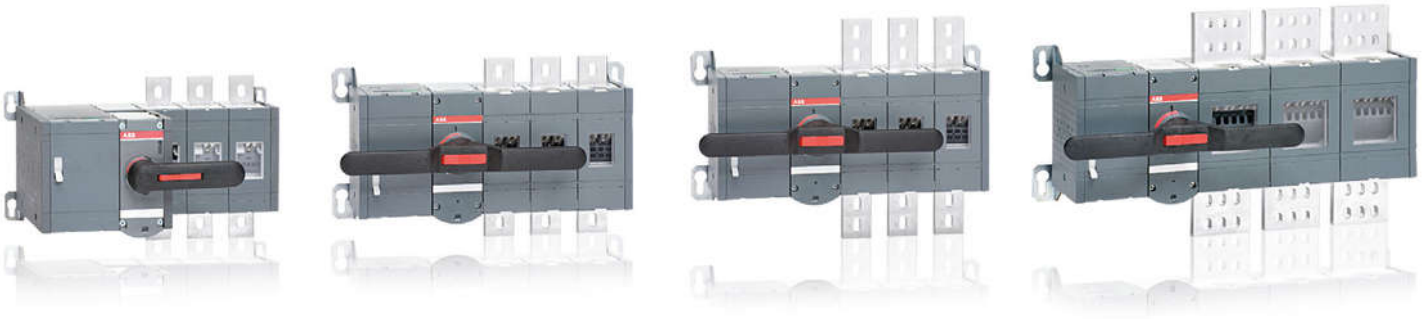

OTM630E	OTM1000E	OTM1600E	OTM2000E	
OTM800E	OTM1250E		OTM2500E	

630 800	**1000 1250**	**1600**	**2000 2500**

Switch-disconnectors 16 to 3150 Amperes
High performance, compact solution



The most compact solution

Possible thanks to a uniquely short current path and a double-sided spring construction combined with a small amount of components. ABB's switches therefore have a small footprint area, allowing installation in confined spaces.

- Space savings mean cost reduction

Quick and perfect installation every time

- Base, door or DIN rail mounted
- Installation in any direction: horizontal, vertical or even at the ceiling
- A wide variety of accessories to customize the installation such as handles shafts, auxiliary contacts, cabling accessories and additional power poles.
- Flexibility to plan your installation

Switches from 16 to 125 Amperes can be snap-on or screw-mounted and switches from 160 to 2500 Amperes have adjustable feet that allow top or side mounting. Snap-on accessories available.

- Easy to install



ABB offers AC and DC rated switch-disconnectors suitable for diverse applications such as machinery, power distribution, switchboards, motor control centers or photovoltaic installations.

High performance

ABB switch-disconnectors have a powerful construction and quick-make/ quick-break operation features that enhance performance.

Full I_{th} ratings can be used in both open air and enclosures.

- There is no need of derating or increasing the size of the enclosure.

AC switch-disconnectors have full AC-23A current ratings for voltage levels up to 690/1000 V

- Suitable for diverse applications

Thanks to their modular design, the rated operational voltage of the DC switch-disconnectors can be scaled up to 1000 V.

- Designed for rising voltages in PV applications

ABB's offering includes manual and motorized switches from 16 to 3150 Amperes.



Technical data
Switch-disconnectors OT16...160

Technical data according to IEC 60947-3		Size	A	16
		Switch type		OT16
Rated insulation voltage and rated operational voltage AC20/DC20	Pollution degree 3		V	750
Dielectric strength		50 Hz 1min.	kV	6
Rated impulse withstand voltage			kV	8
Rated thermal current and rated operational current AC20/DC20	ambient 40°C[2]	In open air	A	25
	ambient 40°C[2]	In enclosure	A	25
	ambient 60°C	In enclosure	A	20
..with minimum conductor cross section		Cu	mm^2	4
Rated operational current, AC-21A		up to 415 V	A	16
		440...690 V	A	16
Rated operational current, AC-22A		up to 415 V	A	16
		440...500 V	A	16
		690 V	A	16
Rated operational current, AC-23A		up to 415 V	A	16
		440 V	A	16
		500 V	A	16
		690 V	A	10
Rated operational current / poles in series, DC-21A		24...48 V[1]	A	16/1
		110 V	A	16/2
		220 V	A	16/3
		440 V	A	16/4
		500 V	A	16/4
		750 V	A	16/8
Rated operational current / poles in series, DC-22A		24...48 V[1]	A	16/1
		110 V	A	16/2
		220 V	A	16/3
		440 V	A	10/4
		750 V	A	16/8
Rated operational current / poles in series, DC-23A		24...48 V[1]	A	16/1
		110 V	A	16/2
		220 V	A	16/4
		440 V	A	10/4
		750 V	A	16/8
Rated operational power, AC-23A		220...240 V	kW	3
(These values are given		400...415 V	kW	7.5
for guidance and may vary		440 V	kW	7.5
acc. to the motor manufacturer)		500 V	kW	7.5
		690 V	kW	7.5
Rated breaking capacity, AC-23A		up to 415 V	A	128
		440 V	A	128
		500 V	A	128
		690 V	A	80
Rated breaking capacity/poles in series, DC-23A		24...48 V	A	64/1
		110 V	A	64/2
		220 V	A	64/3
		440 V	A	40/4
		750 V	A	64/8
Rated conditional short-circuit				
current I_p (r.m.s.) and corresponding	I_p (r.m.s.)	50 kA	kA	6.5
max. allowed cut-off current $\hat{i}_c$	Max. OFA_ fuse size gG/aM	≤ 415 V	A	40/32
	I_p(r.m.s.)	100 kA	kA	
	Max. OFA_ fuse size gG/aM	≤ 500 V	A	
The cut-off current $\hat{i}_c$ refers to values	I_p (r.m.s.)	10 kA	kA	
listed by fuse manufacturers	Max. OFA_ fuse size gG/aM	≤ 690 V	A	
(single phase test acc. to IEC60269)	I_p(r.m.s.)	50 kA	kA	4
	Max. OFA_ fuse size gG/aM	≤ 690 V	A	25/16
Rated short-time withstand current	r.m.s. -value I_{cw}	690 V, 0.25 s	kA	
	r.m.s. -value I_{cw}	690 V, 1 s	kA	0.5
Rated short circuit making capacity	Peak value I_{cm}	690 V/500 V	kA	0.705
Rated capacitor power				
(The capacitor ratings are limited by the fuse link.)		400...415 V	kVAr	6.5
Power loss / pole	At rated operational current		W	0.3
Mechanical endurance	Divide by two for operation cycles		Oper.	20 000
Weight without accessories	3-pole		kg	0.11
	4-pole		kg	0.15
Cable size	Cu-wire size suitable for terminal clamps		mm^2	0.75...10
			AWG	18-8
Terminal tightening torque	Counter torque required		Nm	0.8
Operating torque	3-pole switch-disconnector		Nm	1

[1] Below 48 V, two poles in parallel up to OT80 are recommended particularly in polluted atmosphere.
[2] Acc. to IEC 60947-1, § 6.1.1.

25	40	63	80	100	125
OT25	OT40	OT63	OT80	OT100	OT125
750	750	750	750	750	750
6	6	6	6	6	6
8	8	8	8	8	8
32	40	63	80	115	125
32	40	63	80	115	125
25	32	50	63	80	100
6	10	16	25	35	50
25	40	63	80	100	125
25	40	63	80	100	125
25	40	63	80	100	125
25	40	63	80	100	125
25	40	63	80	100	125
20	23	63	75	80	90
20	23	63	65	65	78
20	23	45	58	60	70
11	12	20	20	40	50
25/1	32/1	63/1	80/1	100/1	125/1
25/2	32/2	63/2	80/2	100/2	125/2
25/3	32/3	63/4	80/4	100/4	125/4
16/4	16/4	16/4	16/4		
16/4	16/4	16/4	16/4		
25/8	32/8				
25/1	32/1	63/1	80/1	100/1	125/1
25/2	32/2	63/2	80/2	100/2	125/2
25/3	32/4	45/4	45/4	63/4	80/4
10/4	10/4	10/4	10/4		
25/8	25/8				
25/1	32/1	63/1	80/1	100/1	125/1
25/2	32/2	63/2	80/2	100/2	125/2
25/4	32/4	45/4	45/4	63/4	63/4
10/4	10/4	10/4	10/4		
16/8	16/8				
4	5.5	11	22	22	22
9	11	22	37	37	45
9	11	22	37	37	45
9	11	22	37	37	45
9	11	15	18.5	37	45
160	184	360	640	640	720
160	184	360	448	520	624
160	184	360	464	480	560
88	96	160	160	320	40
100/1	128/1	180/1	252/1	400/1	500/1
100/2	128/2	180/2	252/2	400/2	500/2
100/4	128/4	180/4	180/4	252/4	252/4
40/4	40/4	40/4	40/4		
64/8	64/8				
6.5	6.5	13	13	16.5	16.5
40/32	40/32	100/80	100/80	125/125	125/125
		17	17		
		100/80	100/80		
				8.2	8.2
				125/100	125/100
4	4	11	11	10	10
25/16	25/16	80/63	80/63	63/63	63/63
0.5	0.5	1	1.5	2.5	2.5
0.705	0.705	1.4	2.1	3.6	3.6
10	15	25	30	40	50
0.6	1.6	2.8	4.5	4.0	6.3
20 000	20 000	20 000	20 000	20 000	20 000
0.11	0.11	0.27	0.27	0.36	0.36
0.15	0.15	0.35	0.35	0.50	0.50
0.75...10	0.75...10	1.5...35	1.5...35	10...70	10...70
18-8	18-8	14-4	14-4	8-00	8-00
0.8	0.8	2	2	6	6
1	1	1.2	1.2	2	2

Technical data
Switch-disconnectors OT160..800

Technical data according to IEC 60947-3		Size	A
		Switch type	
Rated insulation voltage and rated operational voltage AC-20, DC-20	Pollution degree 3		V
Dielectric strength		50 Hz 1min.	kV
Rated impulse withstand voltage			kV
Rated thermal current and rated operational current AC-20, DC-20			
in ambient 40 °C[4]	In open air		A
	In enclosure		A
...with minimum cable cross section		Cu	mm^2
Rated operational current, AC-21A		≤ 500 V	A
		690 V	A
		1000 V	A
Rated operational current, AC-22A		≤ 500 V	A
		690 V	A
		1000 V	A
Rated operational current, AC-23A		≤ 500 V	A
		690 V	A
		1000 V	A
Rated operational current / poles in series, DC-21A[1]		24...110 V	A
		220 V	A
		440 V	A
		660 V	A
Rated operational current / poles in series, DC-21B		800 V	A
		1000 V	A
Rated operational power, AC-23[3]		230 V	kW
		400 V	kW
		415 V	kW
		500 V	kW
		690 V	kW
Rated breaking capacity in		≤ 500 V	A
category AC-23		690 V	A
Rated conditional short-circuit	I_p (r.m.s.)	100 kA, 500 V	kA
current I_p (r.m.s.) and	Max. OFA_ fuse size	gG/aM	A
corresponding max. allowed			
cut-off current $\hat{i}_c$			
The cut-off current $\hat{i}_C$ refers to	I_p (r.m.s.)	80 kA, 690 V	kA
values listed by fuse	Max. OFA_ fuse size	gG/aM	A
manufacturers (single phase			
test acc. to IEC60269).			
Rated short-time withstand current	r.m.s. value I_{cw}	≤ 1000 V 0,15 s	kA
		≤ 1000 V 0,25 s	kA
		≤ 1000 V 1 s	kA
Rated short-time making capacity	Peak value I_{cm}	≤ 1000 V	kA
Rated capacitor power	The capacitor ratings	415 V	kVAr
When no initial charge on the capacitor	are limited by	500 V	kVAr
	the fuse links	690 V	kVAr
Power loss / pole	With rated current		W
Mechanical endurance	Divide by two for oper. cycles		Oper.
Weight without accessories	3-pole switch		kg
Terminal bolt size	Metric thread diameter x length		mm
Terminal tightening torque	Counter torque required		Nm
Operating torque	3-pole switch disconnector		Nm

[1] Further ratings on request.
[2] Category B.
[3] These values are given for guidance and may vary acc. to the motor manufacturer.
[4] Acc. to IEC 60947-1, § 6.1.1.

Placing options of the operating mechanism for OT160EV...800

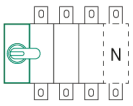

At the end of the switch fuse OT_03 or 04

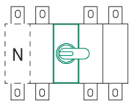

Between the poles OT_12 or 22

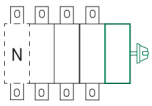

Side operated types OT_30 or 40 OT_03 or 04

160	200	250	315	400	630	800
OT160EV	OT200	OT250	OT315	OT400	OT630	OT800
1 000	1 000	1 000	1 000	1 000	1 000	1 000
10	10	10	10	10	10	10
12	12	12	12	12	12	12
200	200	250	315	400	630	800
160	200	250	315	400	630	800
70	95	120	185	240	2x185	2x240
200	200	250	315	400	630	800
160	200	250	315	400	630	800
160	200	250	315	400	630	800
200	200	250	315	400	630	800
160	200	250	315	400	630	800
160	200	250	315	400	630	800
160	200	250	315	400	630	800
160	200	250	315	400	630	800
135	135	135	200	200	400	400
160/2	200/2	250/2	315/1[2)]	400/1[2)]	630/1	800/1
160/2	200/2	250/2	315/2[2)]	400/2[2)]	630/1	800/1
160/3	200/3	250/3	315/3	360/3	630/2	800/2
160/4	200/4	230/4[2)]	315/4	360/4	630/4[2)]	650/4[2)]
160/5	200/5	250/5	315/5	400/5	600/5	600/5
160/6	200/6	250/6	315/6	400/6	600/6	600/6
48	60	75	100	132	200	250
80	110	140	160	220	355	450
88	110	145	180	230	355	450
112	132	170	220	280	400	560
144	200	250	315	400	630	800
1 280	1 600	2 000	2 520	3 200	5 040	6 400
1 280	1 600	2 000	2 520	3 200	5 040	6 400
40.5	40.5	40.5	61.5	61.5	90	90
315/315	315/315	315/315	500/450	500/450	800/1 000	800/1 000
40.5	40.5	40.5	59	59	83.5	83.5
355/315	355/315	355/315	500/500	500/500	800/1 000	800/1 000
15	15	15	31	31	38	38
15	15	15	24	24	36	36
8	8	8	15	15	20	20
30	30	30	65	65	80	80
80	100	115	145	180	250	310
96	120	135	175	215	300	375
128	160	190	250	325	450	550
3.2	4	6.5	6.5	10	25	40
20 000	20 000	20 000	16 000	16 000	10 000	10 000
1.2	1.2	1.2	2.2	2.2	5.2	5.2
M8x25	M8x25	M8x25	M10x30	M10x30	M12x40	M12x40
15-22	15-22	15-22	30-44	30-44	50-75	50-75
7	7	7	16	16	27	27

Technical data
Switch-disconnectors OT1000...2500 and OETL3150

Technical data according to IEC 60947-3		Size	A
		Switch type	
Rated insulation voltage and rated operational voltage AC20/DC20	Pollution degree 3		V
Dielectric strength		50 Hz 1min.	kV
Rated impulse withstand voltage			kV
Rated thermal current and			
rated operational current AC20/DC20	ambient 40°C[8]	In open air	A
	ambient 40°C[8]	In enclosure	A
	ambient 60°C	In enclosure	A
..with minimum conductor cross section	Cu		mm^2
Rated operational current, AC-21A		up to 690 V	A
		1000 V	A
Rated operational current, AC-22A		up to 500 V	A
		690 V	A
Rated operational current, AC-23A		up to 500 V	A
		690 V	A
Rated operational power, AC-23A		400...415 V	kW
(These values are given for guidance and		440 V	kW
may vary acc. to the motor manufacturer)		500 V	kW
		690 V	kW
Rated breaking capacity, AC-23A		up to 500 V	A
		690 V	A
Rated conditional short-circuit	I_p (r.m.s.)	80 kA	kA
current I_p (r.m.s.) and corresponding	Max. OFA_ fuse size gG/aM	≤ 415 V	A
max. allowed cut-off current $\hat{I}_c$	I_p (r.m.s.)	100 kA	kA
The cut-off current $\hat{I}_c$ refers to values	Max. OFA_ fuse size gG/aM	≤ 500 V	A
listed by fuse manufacturers	I_p (r.m.s.)	50 kA	kA
(single phase test acc. to IEC60269)	Max. OFA_ fuse size gG/aM	≤ 690 V	A
Rated short-time withstand current	r.m.s. -value I_{cw}	690 V 0.25 s	kA
		690 V 1 s	kA
Rated short circuit making capacity	Peak value I_{cm}	415 V	kA
		500 V	kA
		690 V	kA
	Max. distance from switch frame to nearest busbar/cable support		mm
Rated capacitor power	The capacitor ratings	415 V	kVAr
When no initial charge on the capacitor	are limited by	500 V	kVAr
	the fuse links	690 V	kVAr
Power loss / pole	At rated operational current		W
Mechanical endurance	Divide by two for operation cycles		Oper.
Weight without accessories	3-pole		kg
	4-pole		kg
Terminal bolt size	Metric thread diameter x length		mm
Terminal tightening torque	Counter torque required		Nm
Operating torque	3-pole switch-disconnector		Nm

[1] Extended phase distance (185 mm).
[2] IEC 947-3, utilization category B, infrequent operation.
[3] Phase barriers or terminal shrouds must be used on both sides of the switch at voltages ≥ 500 V.
[4] Pf. 0.65.
[5] Maximum distance between busbar support and switch terminal 70 mm.
[6] 690 V: 2500 A.
[7] The value is 92 kA for 4-pole switch-disconnectors.
[8] Acc. to IEC60947-1, § 6.1.1.

Placing options of the operating mechanism for OT1000...2500

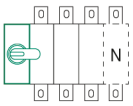

At the end of the switch fuse OT_03 or 04

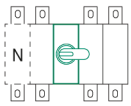

Between the poles OT_12 or 22

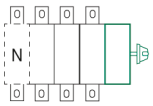

Side operated types OT_30 or 40 OT_03 or 04

1000	1250	1600	2000	2500	3150
OT1000	OT1250	OT1600	OT2000	OT2500	OETL3150
1 000	1 000	1 000	1 000	1 000	1 000
10	10	10	10	10	8
12	12	12	12	12	8
1 000	1 250	1 600	2 000	2 500	3 150
1 000	1 250	1 600			2 600
					2 300
2x300	2x400	2x500	3x500	4x500	3x(100x10)
1 000	1 250	1 600	2 000[2]	2 500[2]	3 150[2] [6]
1 000	1 250	1 600			1 000[2]
1 000	1 250	1 600	2 000[2] [3]	2 500[2] [3]	1 600[2]
1 000	1 250	1 600	2 000[2] [3]	2 500[2] [3]	
1 000	1 250	1 250			
1 000	1 250	1 250			
560	710	710			
630	800	800			
710	900	900			
1 000	1 200	1 200			
10 000	10 000	10 000			6 400
10 000	10 000	10 000			4 800[4]
100	100	100			140
1 250/1 250	1 250/1 250	1 250/1 250			
106	106	106			140
1 250/1 250	1 250/1 250	1 250/1 250			
					105
50	50	50	80	80	
50	50	50	55	55	80[5]
					176[1]
					140
110[7]	110[7]	110[7]	176	176	105
150	150	150	150	150	
460	575	575			
550	690	690			
750	950	950			
19	29	48	55	85	140
6 000	6 000	6 000	6 000	6 000	1 200
14.1	14.1	15.2	22	22	37
18	18	19.5	28	28	47
M12x50	M12x50	M12x60	M12x60	M12x60	M12x60
50...75	50...75	50...75	50...75	50...75	50...75
65	65	65	65	65	50

Technical data
Non fusible disconnect switches
OT16...600

			Size	A	20		30	
			Switch type		OT16		OT25	
			Approvals[1]	2 pole				
				3 pole	UL508 & IEC		UL508 & IEC	
				4 pole	UL508 & IEC		UL508 & IEC	
Technical data according to UL/CSA, AC ratings								
General purpose amp rating	pf= 0.7...0.8	-40° to 40 °C		A	20		30	
Max. oprerating voltage				V	600		600	
Max. horsepower rating	pf= 0.4...0.5	240 V		HP/A	5/15.2		7.5/22.0	
/motor FLA current	Three phase	480 V		HP/A	10/14.0		15/21.0	
		600 V		HP/A	10/11		20/22.0	
	Single phase	120 V		HP/A	1/16.0		1.5/20.0	
		240 V		HP/A	2/13.2		3/18.7	
Short circuit rating with fuse	Maximum fuse size			A	30	60[2]	30	60[2]
	Fuse type	CC		kA	10		10	
	Fuse type	J		kA	10	10	10	10
	Fuse type	T		kA	10	10	10	10
	Fuse type	RK1		kA	10		10	
	Fuse type	RK5		kA	5	5	5	5
	Fuse type	L		kA				
	Fuse type	H		kA				
Maximum General Use, DC ratings								
Current rating			at 250 VDC	A				
			at 600 VDC	A				
DC horsepower rating for 4-pole switch			at 600 VDC	HP				
DC horsepower rating for 2-pole switch			at 125 VDC	HP				
			at 250 VDC	HP				
DC short circuit rating for 4-pole switch			with circuit breaker	kA				
DC short circuit rating for 2-pole switch			with circuit breaker at 250 VDC	kA				
			with circuit breaker at 600 VDC	kA				
			with class J fuse at 250 VDC	kA				
			... with fuse size	A				
Endurances								
Min. electrical endurance, pf. 0.75...0.8				oper. cycles	6 000		6 000	
Mechanical endurance				operations	20 000		20 000	
Terminal lug kits					integral		integral	
Wire range				AWG	18-8		18-8	
Torque			Wire tightening	lb.in	7		7	
			Lug mounting					
Technical data according to IEC 60947-3								
Rated insulation voltage and rated operational voltage AC20/DC20	Pollution degree 3			V	750		750	
Dielectric strength		50 Hz 1min.		kV	6		6	
Rated impulse withstand voltage				kV	8		8	
Rated operational current, AC-22A		up to 415 V		A	16		25	
		440...500 V		A	16		25	
		690 V		A	16		25	
Rated operational current, AC-23A		up to 415 V		A	16		20	
		440 V		A	16		20	
		500 V		A	16		20	
		690 V		A	10		11	
Rated conditional short-circuit current I_p (r.m.s.) and corresponding max. allowed cut-off current $\hat{i}_c$	I_p (r.m.s.)	50 kA		kA	6.5		6.5	
	Max. OFA_ fuse size gG/aM	415 V		A	40/32		40/32	
The cut-off current $\hat{i}_c$ refers to values listed by fuse manufacturers	I_p (r.m.s.)	10 kA		kA				
	Max. OFA_ fuse size gG/aM	690 V		A				
(single phase test acc. to IEC60269)	I_p (r.m.s.)	50 kA		kA	4		4	
	Max. OFA_ fuse size gG/aM	690 V		A	25/16		25/16	
	at prospective SC-current	80 kA		kA				
	Max. OFA_fuse size gG/aM	690 V		A				
Rated short-time withstand current	r.m.s. -value I_{cw}	690 V, 1 s		kA	0.5		0.5	
Rated short circuit making capacity	Peak value I_{cm}	690 V/500 V		kA	0.705		0.705	
Power loss / pole		At rated operational current		W	0.3		0.6	
Mechanical endurance		Divide by two for operation cycles		Oper.	20 000		20 000	
Weight without accessories		3-pole		kg	0.11		0.11	
		4-pole		kg	0.15		0.15	

[1] UL Listed switches are also CSA Approved.
[2] Fuse size 70A for RK5.

Placing options of the operating mechanism for OT200...600

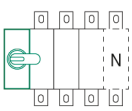

At the end of the switch fuse OT_03 or 04

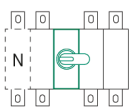

Between the poles OT_12 or 22

40	60	80	30	60	100	200	400	600
OT40	OT63	OT80	OT30	OT60	OT100	OT200_U	OT400_U	OT600_U
						UL 98 & IEC	UL 98 & IEC	UL 98 & IEC
UL508 & IEC	UL508 & IEC	UL508 & IEC	UL 98 & IEC	UL 98 & IEC	UL 98 & IEC	UL 98 & IEC	UL 98 & IEC	UL 98 & IEC
UL508 & IEC	UL508 & IEC	UL508 & IEC	UL 98 & IEC	UL 98 & IEC	UL 98 & IEC	UL 98 & IEC	UL 98 & IEC	UL 98 & IEC
40	60	80	30	60	100	200	400	600
600	600	600	600	600	600	600	600	600
10/28.0	15/42.0	20/54.0	10/28.0	20/54.0	30/80.0	75/192.0	125/312.0	200/480.0
20/27.0	30/40.0	40/52.0	20/27.0	40/52.0	50/65.0	150/180.0	250/302.0	450/515.0
25/27.0	30/32.0	40/41.0	30/32.0	40/41.0	50/52.0	200/192.0	350/336.0	500/472.0
2/24.0	2/24.0	2/24.0	2/24.0	3/34.0	5/56.0			
5/30.8	7.5/40.0	10/57.5	5/28.0	7.5/40.0	15/68.0			
30	60[2)]	100	150	100	150	60	150	150	200	400	600	600	800
10													
10	10	100		100		50	50	50	200	65	100		100
10	10	100		100		50	50	50					100
10													
5	5	10	5	10	5							100	
													100
			5		5								
									200	400	600		
									100	200	200		
									50	50	-		
									20	40	-		
									-	50	50		
									10	10	10		
									14	14	18		
									10	10	10		
									100	100	100		
									200	400	600		
6 000	6 000	6 000	6 000	6 000	6 000	6 000	1 000	1 000					
20 000	20 000	20 000	20 000	20 000	20 000	20 000	16 000	10 000					
integral	integral	integral	integral	integral	integral	OZXA-200	OZXA-400	OZXA-800					
18-8	14-4	14-4	14-4	14-4	8-1/0	4-300MCM	2-600MCM	2x2-600MCM					
7	18	18	55	55	55	275	375	500					
						72	240	480					
750	750	750	750	750	750	1 000	1 000	1 000					
6	6	6	6	6	6	10	10	10					
8	8	8	8	8	8	12	12	12					
40	63	80	40	63	100	250	400	800					
40	63	80	40	63	100	250	400	800					
40	63	80	40	63	100	250	400	800					
23	45	75	40	63	80	250	400	800					
23	45	65	40	63	65	250	400	800					
23	45	58	40	63	60	250	400	800					
12	20	20	40	40	40	250	400	800					
6.5	13	13	16.5	16.5	16.5								
40/32	100/80	100/80	125/125	125/125	125/125								
			8.2	8.2	8.2								
			125/100	125/100	125/100								
4	11	11	10	10	10	35	50.5	71.5					
25/16	80/63	80/63	63/63	63/63	63/63	355/315	500/500	800/1 000					
						40.5	59	83.5					
						355/315	500/500	800/1 000					
0.5	1	1.5	2.5	2.5	2.5	8	15	20					
0.705	1.4	2.1	3.6	3.6	3.6	30	65	80					
1.6	2.8	4.5	0.7	1.6	4.0	6.5	10	40					
20 000	20 000	20 000	20 000	20 000	20 000	20 000	16 000	10 000					
0.11	0.27	0.27	0.36	0.36	0.36	1.2	2.2	5.2					
0.15	0.35	0.35	0.50	0.50	0.50	1.5	2.8	6.4					

Technical data
Non fusible disconnect switches
OT800...1200 and OETL-NF1600...2000

				Size	A	800	1200	1600	2000
				Switch type		OT800U	OT1200U	OETL -NF1600P	OETL -NF2000P
				Approvals[1]	2 pole			UL 98 & IEC	UL 98 & IEC
					3 pole	UL 98 & IEC	UL 98 & IEC	UL 98 & IEC	UL 98 & IEC
					4 pole	UL 98 & IEC	UL 98 & IEC	IEC	IEC
Technical data according to UL/CSA AC Ratings									
General purpose amp rating	pf= 0.7...0.8		-40° to 40 °C		A	800	1200	1600	2000
Max. oprerating voltage					V	600	600	600	480
Max. horsepower rating	pf= 0.4...0.5		240 V		HP/A	200/602			
/max. motor FLA current	Three phase		480 V		HP/A	500/590			
			600 V		HP/A	500/472			
Short circuit rating with fuse	Fuse type		L		kA	100	100	100	100
Maximum fuse size					A	800	1200	2000	2000
Endurances									
Min. electrical endurance, pf. 0.75...0.8			oper. cycles			500	500	500	500
Mechanical endurance			operations			6 000	6 000	4 000	4 000
Terminal lug kits						OZXA-800	OZXA-1200	OZXA28	OZXA28/2
Wire range					AWG	2x2-600MCM	4x2-600MCM	4x2-600MCM	8x2-600MCM
Torque			Wire tightening		lb.in	500	500	375	375
			Lug mounting		lb.in	480	450-670	230	230
Technical data according to IEC 60947									
Rated insulation voltage and rated operational voltage AC20/DC20	Pollution degree 3				V	1000	1000	1000	1000
Dielectric strength	50 Hz 1min.				kV	10	10	8	8
Rated impulse withstand voltage					kV	12	12	8	8
Rated operational current, AC-22A			up to 415 V		A	1600	1600	1600	1600[3]
			440...500 V		A	1600	1600	1600	1600[3]
			690 V		A	1600	1600		
Rated operational current, AC-23A			up to 415 V		A	1250	1250	800	
			440 V		A	1250	1250	800	
			500 V		A	1250	1250	800	
			690 V		A	1250	1250		
Rated conditional short-circuit		I_p (r.m.s.)	50 kA		kA			105	140
current I_p (r.m.s.) and corresponding	Max. OFA_ fuse size gG/aM		415 V		A				
max. allowed cut-off current $\hat{I}_c$		I_p (r.m.s.)	50 kA		kA			105	140
The cut-off current $\hat{I}_c$ refers to values	Max. OFA_ fuse size gG/aM		500 V		A				
listed by fuse manufacturers		I_p (r.m.s.)	50 kA		kA			105	105
(single phase test acc. to IEC60269)	Max. OFA_ fuse size gG/aM		690 V		A				
Rated short-time withstand current		R.M.S. -value I_{cw}	690 V	1 s	kA	50	50	50[2]	80[2]
Rated short circuit making capacity		Peak value I_{cm}	500/690 V		kA	110[4]	110[4]	105	140/105
Power loss / pole			At rated operational current		W	29	48	67	90
Weight without accessories			3-pole		kg	15.2	15.2	17.5	37
			4-pole		kg	19.5	19.5	22.5	47
Terminal bolt size			Metric thread diameter x length		mm	M12x50	M12x60	M12x60	M12x60

[1] UL Listed switches are also CSA Approved.
[2] Max. distance between busbar support and switch terminal 70 mm.
[3] IEC60947-3 category B.
[4] The value is 92 kA for 4-pole switch disconnector.

Placing options of the operating mechanism for OT800...1200

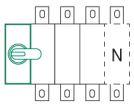

At the end of the switch fuse OS_03 or 04

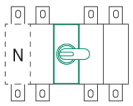

Between the poles OS_12 or 22

Technical data
DC-switch-disconnectors OTDC16...32

Technical data according to IEC 60947	Size	A	16	25	32
	Switch type		OTDC16	OTDC25	OTDC32
Rated insulation voltage U_i[1]	Pollution degree 2	V	1250	1250	1250
	Pollution degree 3	V	1000	1000	1000
Dielectric strength	50 Hz 1min.	kV	6	6	6
Rated impulse withstand voltage		kV	8	8	8
Rated thermal current I_{th} DC-20	open air, normal conditions[2]	A	25	32	45
	enclosure 40°C	A	25	32	45
	enclosure 60°C	A	25	32	32
...with minimum cable or bar cross section	Cu	mm^2	4	6	10
Suitable wire size	Cu	mm^2	2.5...16	2.5...16	2.5...16
Rated operational current / poles in series	660 V	A	16/2	25/2	32/2
DC-21B	1000 V	A	16/3	25/3	32/3
	1000 V / 2 x 660 V[3]	A	16/4	25/4	32/4
Rated short-time withstand current, 1000 V, 1 s	R.M.S. -value / I_{cw}	A	400	600	800
Power loss / pole	At rated current	W	0.15	0.3	0.5

[1] When used with external handle. For use with direct mounted handle, see installation instructions for restrictions.
[2] Normal conditions defined in IEC 60947-1-6.1.
[3] 1000 V with all the poles connected in series, 600 V with 2 poles in series

Technical data
Motor operators OTM160...2500

Data for motor operator of switch-diconnectors		Size	A	160...250	315...400	600...800	1000...2500
OTM according to IEC 60947		Switch type		OTM	OTM	OTM	OTM
Rated operational voltage U_e	Pollution degree 3						
	50/60 Hz		V AC	220...240	220...240	220...240	220...240
Operating voltage range				0.85...1.1 x U_e	0.85...1.1 x U_e	0.85...1.1 x U_e	0.85...1.1 x U_e
Operating time[1]	90° I - 0, 0 - I	220-240 VAC	s	0.5...1.0	0.5...1.0	0.5...1.5	1.0...2.0
Nominal current I_n[1]		220-240 VAC	A	0.3	0.5	0.9	1.4
Current inrush[1]		220-240 VAC	A	1.5	2.5	4.0	10
Overload fuse	Type / I_n / Capacity	220-240 VAC	mA	T / 315 / H	T / 500 / H	T / 1000 / H	T / 2000 / H
	Size		mm	5x20	5x20	5x20	5x20
Operating rate	Cycle 0 - I - 0						
	Max. continuous	220-240 VAC	cycles / min	1	1	1	0.5
	Max. short-time ≤ 10 cycles	220-240 VAC	cycles / min	10	10	10	5
Overvoltage category				III	III	III	III
Rated impulse withstand voltage U_{imp}			kV	4	4	4	4
Dielectric strength		50 Hz 1 min.	kV	1.5	1.5	1.5	1.5
Impulse command		Min. impulse duration	ms	100	100	100	100
Terminals	Voltage supply wiring for U_e			PE - N - L	PE - N - L	PE - N - L	PE - N - L
	Cross section	solid/stranded	mm^2	1.5...2.5	1.5...2.5	1.5...2.5	1.5...2.5
	Short-circuit protection device	max.fuse size	A	16	16	16	16
	Push-button control	C - I - O		no SELV	no SELV	no SELV	no SELV
	Cross section	solid/stranded	mm^2	1.5 - 2.5	1.5...2.5	1.5...2.5	1.5...2.5
	Maximum cable length		m	100	100	100	100
State information of locking				no SELV	no SELV	no SELV	no SELV
	Handle attached or motor operator locked	11-12-14 (C/O)	cosφ=1	5A/250V	5A/250V	5A/250V	5A/250V
	Locking motor operator	23-24 (NO)	cosφ=1	5A/250V	5A/250V	5A/250V	5A/250V
	Short-circuit protection device	MCB type and size		C/2A	C/2A	C/2A	C/2A
Protection degree				IP20	IP20	IP20	IP20
Operating temperature			°C	-25...+55	-25...+55	-25...+55	-25...+55
Transportation and storage temperature			°C	-40...+70	-40...+70	-40...+70	-40...+70
Max. altitude			m	2000	2000	2000	2000

[1] Under nominal conditions.

Ordering information
Front operated switch-disconnectors

OT16...40F3
S04049



OT63...80F3
S04050



OT100...125F3
S04051



OT125FLB3
S07089



Switch-disconnectors, base and DIN-rail mounting

Including protected terminal clamps IP20, except OT125FL_ types.
The type and the ordering numbers are for one piece.

No. of poles	I_{th} (open) [A]	Cable cross section [mm²]	Rated operat. currents AC22A/ AC23A 400V [A/A]	Type	Order number	Delivery batch [pcs]	Weight/ unit [kg]
Shaft and handle need to be ordered separately							
3	25	0.75...10	16/16	OT16F3	1SCA104811R1001	10	0.11
4	25	0.75...10	16/16	OT16F4N2	1SCA104829R1001	10	0.14
3	32	0.75...10	25/20	OT25F3	1SCA104857R1001	10	0.11
4	32	0.75...10	25/20	OT25F4N2	1SCA104886R1001	10	0.14
3	40	0.75...10	40/23	OT40F3	1SCA104902R1001	10	0.11
4	40	0.75...10	40/23	OT40F4N2	1SCA104932R1001	10	0.14
3	63	1.5...35	63/45	OT63F3	1SCA105332R1001	10	0.27
4	63	1.5...35	63/45	OT63F4N2	1SCA105365R1001	10	0.30
3	80	1.5...35	80/75	OT80F3	1SCA105798R1001	10	0.27
4	80	1.5...35	80/75	OT80F4N2	1SCA105413R1001	10	0.30
3	115	10...70	100/80	OT100F3	1SCA105004R1001	10	0.36
4	115	10...70	100/80	OT100F4N2	1SCA105018R1001	10	0.50
3	125	10...70	125/90	OT125F3	1SCA105033R1001	10	0.36
4	125	10...70	125/90	OT125F4N2	1SCA105051R1001	10	0.50
3	125		125/90	OT125FL3[1)]	1SCA112372R1001	1	0.43
3	125		125/90	OT125FLA3[2)]	1SCA114832R1001	1	0.43
3	125		125/90	OT125FLB3[3)]	1SCA114833R1001	1	0.43

[1)] Extended terminals on both sides of the switch
[2)] Extended terminals on top side only
[3)] Extended terminals on bottom side only

Ordering information
Front operated switch-disconnectors

OT16...40F6
S04052



6- and 8-pole switch-disconnectors, base and DIN-rail mounting

Including protected terminal clamps, IP20.

Number of poles	I_{th} (open) [A]	Cable cross section [mm²]	Rated operat. currents AC22A/ AC23A 400V [A/A]	Type	Order number	Units/ type [pcs]	Weight/ unit [kg]
Shaft and handle need to be ordered separately							
6	25	0.75...10	16/16	OT16F6	1SCA104834R1001	1	0.25
6	32	0.75...10	25/20	OT25F6	1SCA104880R1001	1	0.25
6	40	0.75...10	40/23	OT40F6	1SCA104936R1001	1	0.25
6	63	1.5...35	63/45	OT63F6	1SCA105379R1001	1	0.61
6	80	1.5...35	80/75	OT80F6	1SCA105427R1001	1	0.61
6	115	10...70	100/80	OT100F6	1SCA105021R1001	1	0.81
6	125	10...70	125/90	OT125F6	1SCA105057R1001	1	0.81
8	25	0.75...10	16/16	OT16F8	1SCA104836R1001	1	0.31
8	32	0.75...10	25/20	OT25F8	1SCA104882R1001	1	0.31
8	40	0.75...10	40/23	OT40F8	1SCA104938R1001	1	0.31
8	63	1.5...35	63/45	OT63F8	1SCA105381R1001	1	0.67
8	80	1.5...35	80/75	OT80F8	1SCA105429R1001	1	0.67
8	115	10...70	100/80	OT100F8	1SCA105022R1001	1	1.10
8	125	10...70	125/90	OT125F8	1SCA105059R1001	1	1.10

Ordering information
Front operated switch-disconnectors

OT16...40FT3
S00260A



OT63...80FT3
S00690A



OT100...125FT3
S01341A



Switch-disconnectors, door mounting

Include protected terminal clamps, IP20.
The type and ordering numbers are for one piece.

Number of poles	I_{th} (open) [A]	Cable cross section [mm²]	Rated operat. currents AC22A/ AC23A 400V [A/A]	Type	Order number	Delivery batch [pcs]	Weight/ unit [kg]
Shaft and handle need to be ordered separately							
3	25	0.75...10	16/16	OT16FT3	1SCA104838R1001	10	0.13
4	25	0.75...10	16/16	OT16FT4N2	1SCA105711R1001	10	0.16
3	32	0.75...10	25/20	OT25FT3	1SCA104884R1001	10	0.13
4	32	0.75...10	25/20	OT25FT4N2	1SCA104900R1001	10	0.16
3	40	0.75...10	40/23	OT40FT3	1SCA104940R1001	10	0.13
4	40	0.75...10	40/23	OT40FT4N2	1SCA104956R1001	10	0.16
3	63	1.5...35	63/45	OT63FT3	1SCA105382R1001	10	0.28
4	63	1.5...35	63/45	OT63FT4N2	1SCA105393R1001	10	0.35
3	80	1.5...35	80/75	OT80FT3	1SCA105431R1001	10	0.28
4	80	1.5...35	80/75	OT80FT4N2	1SCA105499R1001	10	0.35
3	115	10...70	100/80	OT100FT3	1SCA105023R1001	10	0.40
4	115	10...70	100/80	OT100FT4N2	1SCA105031R1001	10	0.54
3	125	10...70	125/90	OT125FT3	1SCA105060R1001	10	0.40
4	125	10...70	125/90	OT125FT4N2	1SCA105066R1001	10	0.54

Ordering information
Front operated switch-disconnectors

OT160EV...250E03P
S02101A



OT200...250E04P
S02102A



OT315...400E03P
S02103A



OT315...400E04P
S02104A



OT630...800E03P
S02105A



OT630...800E04P
S02106A



Switch-disconnectors, with pistol handle, base mounting

Including a black ON-OFF plastic handle and shaft as standard. The handle is IP65 protected, padlockable in the OFF-position and with door interlock in the ON-position. The shaft is adjustable for a range of installation depths.

Number of poles	I_{th} (open) [A]	Rated operat. currents AC22A/ AC23A 400V [A/A]	Type	Order number	Units/ type [pcs]	Weight/ unit [kg]
3	200	200/160	OT160EV03P	1SCA120514R1001	1	1.6
4	200	200/160	OT160EV04P	1SCA120521R1001	1	2.0
3	200	200/160	OT160EV12P	1SCA120529R1001	1	1.6
4	200	200/160	OT160EV22P	1SCA120537R1001	1	2.0
3	200	200/200	OT200E03P	1SCA022712R0800	1	1.6
4	200	200/200	OT200E04P	1SCA022713R4930	1	2.0
3	200	200/200	OT200E12P	1SCA022721R3990	1	1.6
4	200	200/200	OT200E22P	1SCA022721R4020	1	2.0
3	250	250/250	OT250E03P	1SCA022710R0100	1	1.6
4	250	250/250	OT250E04P	1SCA022710R0520	1	2.0
3	250	250/250	OT250E12P	1SCA022721R4110	1	1.6
4	250	250/250	OT250E22P	1SCA022721R4290	1	2.0
3	315	315/315	OT315E03P	1SCA022718R8510	1	3.1
4	315	315/315	OT315E04P	1SCA022719R1730	1	3.7
3	315	315/315	OT315E12P	1SCA022727R4190	1	3.1
4	315	315/315	OT315E22P	1SCA022727R4270	1	3.7
3	400	400/400	OT400E03P	1SCA022718R8780	1	3.1
4	400	400/400	OT400E04P	1SCA022719R1810	1	3.7
3	400	400/400	OT400E12P	1SCA022727R5750	1	3.1
4	400	400/400	OT400E22P	1SCA022727R5830	1	3.7
3	630	630/630	OT630E03P	1SCA022718R8940	1	6.3
3+N[1)]	630	630/630	OT630E03N3P	1SCA022779R4860	1	6.7
4	630	630/630	OT630E04P	1SCA022719R2030	1	7.5
3	630	630/630	OT630E12P	1SCA022753R4790	1	6.3
4	630	630/630	OT630E22P	1SCA022753R4870	1	7.5
3	800	800/800	OT800E03P	1SCA022718R9410	1	6.3
3+N[1)]	800	800/800	OT800E03N3P	1SCA022779R4780	1	6.7
4	800	800/800	OT800E04P	1SCA022719R2110	1	7.5
3	800	800/800	OT800E12P	1SCA022753R5170	1	6.3
4	800	800/800	OT800E22P	1SCA022753R5250	1	7.5

[1)] Include a detachable neutral link integrated into the mechanism.

Shafts and handles included as standard

Suitable for switches	Included shaft	Included handle	Included terminal bolts
OT160EV…250_P	OXP6X210	OHB65J6	M8x25
OT315…400_P	OXP12X185	OHB95J12	M10x30
OT630…800_P	OXP12X185	OHB125J12	M12x40

Ordering information
Front operated switch-disconnectors

OT1000...1250_03P
S07079



OT1600_03P
S07080



OT2000...2500E03P
S07081



Switch-disconnectors, with pistol handle, base mounting

Including terminal bolt kit, a black ON-OFF plastic handle and shaft as standard. The handle is IP65 protected, padlockable in the OFF-position and with door interlock in the ON-position. The shaft is adjustable for a range of installation depths.

Number of poles	I_{th} (open) [A]	Rated operat. currents AC22A/ AC23A 400V [A/A]	Type	Order number	Units/ type [pcs]	Weight/ unit [kg]
3	1000	1000/1000	OT1000E03P	1SCA022860R5930	1	17.0
3+N[1)]	1000	1000/1000	OT1000E03N3P	1SCA100761R1001	1	17.9
4	1000	1000/1000	OT1000E04P	1SCA022860R6150	1	19.5
3	1000	1000/1000	OT1000E12P	1SCA022871R5520	1	17.0
4	1000	1000/1000	OT1000E22P	1SCA022871R5610	1	19.5
3	1250	1250/1250	OT1250E03P	1SCA022860R6230	1	17.0
3+N[1)]	1250	1250/1250	OT1250E03N3P	1SCA022865R7060	1	17.9
4	1250	1250/1250	OT1250E04P	1SCA022860R6310	1	19.5
3	1250	1250/1250	OT1250E12P	1SCA022871R5790	1	17.0
4	1250	1250/1250	OT1250E22P	1SCA022871R5870	1	19.5
3	1600	1600/1250	OT1600E03P	1SCA022860R6580	1	19.0
3+N[1)]	1600[2)]	1600/1250	OT1600E03N3P	1SCA022865R6920	1	19.9
4	1600	1600/1250	OT1600E04P	1SCA022860R6740	1	22.0
3	1600	1600/1250	OT1600E12P	1SCA022871R5950	1	19.0
4	1600	1600/1250	OT1600E22P	1SCA022871R6090	1	22.0
3	2000	2000/-	OT2000E03P	1SCA108036R1001	1	42.0
3+N[1)]	2000[2)]	2000/-	OT2000E03N3P	1SCA108037R1001	1	42.0
4	2000	2000/-	OT2000E04P	1SCA108038R1001	1	48.0
3	2000	2000/-	OT2000E12P	1SCA108039R1001	1	42.0
4	2000	2000/-	OT2000E22P	1SCA108041R1001	1	48.0
3	2500	2500/-	OT2500E03P	1SCA104972R1001	1	42.0
3+N[1)]	2500[2)]	2500/-	OT2500E03N3P	1SCA108035R1001	1	42.0
4	2500	2500/-	OT2500E04P	1SCA105140R1001	1	49.0
3	2500	2500/-	OT2500E12P	1SCA104978R1001	1	42.0
4	2500	2500/-	OT2500E22P	1SCA105156R1001	1	49.0

[1)] Include a detachable neutral link integrated into the mechanism.
[2)] I_{th} for N-pole =1250A

Shafts and handles included as standard

Suitable for switches	Included shaft	Included handle	Included terminal bolts
OT1000...1250_P	OXP12X280	OHB274J12	M12x50
OT1600_P	OXP12X280	OHB274J12	M12x60
OT2000…2500_P	OXP12X280	OHB274J12	M12x60

Ordering information
Front operated switch-disconnectors

OETL3150K3
S00011A

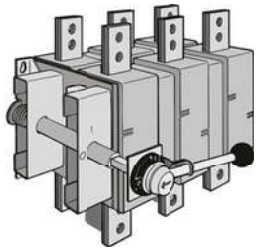

Switch-disconnectors, base mounting

Number of poles	I_{th} (open) [A]	Rated operat. currents AC22A/ AC23A 400V [A/A]	Type	Order number	Units/ type [pcs]	Weight/ unit [kg]
Including a I-O metallic handle and shaft as standard						
The handle is IP54 protected, padlockable in the O-position. The shaft is adjustable for a range of installation depths.						
3	3150	1600/-	OETL3150K3[3)]	1SCA022115R6340	1	37.0
3	3150	1600/-	OETL3150K185[2)3)]	1SCA022136R7550	1	38.0
4	3150	1600/-	OETL3150K4[3)]	1SCA022115R6510	1	47.0
3	3150	1600/-	OETL3150K3-H20[3)1)]	1SCA022163R8090	1	37.0
3	3150	1600/-	OETL3150KV12	1SCA022290R3390	1	37.0
4	3150	1600/-	OETL3150KV22	1SCA022293R8260	1	47.0
Handle and shaft have to be ordered separately						
3	3150	1600/-	OETL3150K3-2[3)]	1SCA022157R4260	1	37.0

[1)] Extra thick (20 µm) silver coating on the contacts.
[2)] With extended phase distances: OETL3150K185:185 mm
[3)] The busbar connections for different busbar arrangements have to be ordered separately.

Shafts and handles included as standard

Suitable for switches	Included shaft	Included handle	Included terminal bolts
OETL3150	OXP12X325	YASDA7	M12x60

Ordering information
Front operated switch-disconnectors

OT160EV...250E03K
S01981A



OT315...400E03K
S01981A



OT630...800E03K
S02116A



OT1000...1600E03K
S04047



OT2000...2500E03K
S04048



Switch-disconnectors with direct mounted handle, base mounting

Including a black Test-OFF-ON plastic handle and shaft as standard. The handle is padlockable in the OFF-position.

Number of poles	I_{th} (open) [A]	Rated operat. currents AC22A/ AC23A 400V [A/A]	Type	Order number	Units/ type [pcs]	Weight/ unit [kg]
3	200	200/160	OT160EV03K	1SCA120513R1001	1	1.5
4	200	200/160	OT160EV04K	1SCA120520R1001	1	1.9
3	200	200/200	OT200E03K	1SCA022763R4820	1	1.5
4	200	200/200	OT200E04K	1SCA022763R4910	1	1.9
3	250	250/250	OT250E03K	1SCA022763R5040	1	1.5
4	250	250/250	OT250E04K	1SCA022763R5210	1	1.9
3	315	315/315	OT315E03K	1SCA022763R5630	1	2.9
4	315	315/315	OT315E04K	1SCA022763R5710	1	3.5
3	400	400/400	OT400E03K	1SCA022763R5390	1	2.9
4	400	400/400	OT400E04K	1SCA022763R5550	1	3.5
3	630	630/630	OT630E03K	1SCA022779R4940	1	6.3
4	630	630/630	OT630E04K	1SCA022779R5080	1	7.5
3	800	800/800	OT800E03K	1SCA022779R5160	1	6.3
4	800	800/800	OT800E04K	1SCA022779R5240	1	7.5
3	1000	1000/1000	OT1000E03K	1SCA108353R1001	1	17.5
4	1000	1000/1000	OT1000E04K	1SCA108355R1001	1	21.5
3	1250	1250/1250	OT1250E03K	1SCA108356R1001	1	17.5
4	1250	1250/1250	OT1250E04K	1SCA108357R1001	1	21.5
3	1600	1600/1250	OT1600E03K	1SCA108352R1001	1	18.5
4	1600	1600/1250	OT1600E04K	1SCA108358R1001	1	21.5
3	2000	2000/-	OT2000E03K	1SCA108359R1001	1	42.3
4	2000	2000/-	OT2000E04K	1SCA108362R1001	1	47.8
3	2500	2500/-	OT2500E03K	1SCA108361R1001	1	42.3
4	2500	2500/-	OT2500E04K	1SCA108363R1001	1	48.8

Shafts and handles included as standard

Suitable for switches	Included handle	Included terminal bolts
OT160EV…250_K	OTV250EK	M8x25
OT315…400_K	OTV400EK	M10x30
OT630…800_K	OTV800EK	M12x40
OT1000…1250_K	OTV1000EK	M12x50
OT1600_K	OTV1000EK	M12X60
OT2000…2500_K	OTV1000EK	M12x60

Ordering information
Front operated switch-disconnectors

OT200...250E03W
S02113A



OT315...400E03W
S02115A

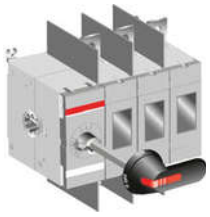

Switch-disconnectors with wide phase distance, base mounting

The phase barriers are mounted as standard. Including a black ON-OFF plastic handle and shaft as standard. The handle is IP65 protected, padlockable in the OFF-position and with door interlock in the ON-position. The shaft is adjustable for a range of installation depths.

Number of poles	I_{th} (open) [A]	Rated operat. currents AC22A/ AC23A 400V [A/A]	Type	Order number	Units/ type [pcs]	Weight/ unit [kg]
3	200	200/160	OT160EV03WP	1SCA120517R1001	1	1.8
4	200	200/160	OT160EV04WP	1SCA120523R1001	1	2.2
3	200	200/160	OT160EV12WP	1SCA120606R1001	1	1.8
4	200	200/160	OT160EV22WP	1SCA120539R1001	1	2.2
3	200	200/200	OT200E03WP	1SCA022744R2670	1	1.8
4	200	200/200	OT200E04WP	1SCA022744R3130	1	2.2
3	200	200/200	OT200E12WP	1SCA022744R2910	1	1.8
4	200	200/200	OT200E22WP	1SCA022744R3300	1	2.2
3	250	250/250	OT250E03WP	1SCA022744R3560	1	1.8
4	250	250/250	OT250E04WP	1SCA022744R3810	1	2.2
3	250	250/250	OT250E12WP	1SCA022745R0000	1	1.8
4	250	250/250	OT250E22WP	1SCA022745R0180	1	2.2
3	315	315/315	OT315E03WP	1SCA022809R8650	1	3.4
4	315	315/315	OT315E04WP	1SCA022809R8900	1	4.0
3	315	315/315	OT315E12WP	1SCA022809R9380	1	3.4
4	315	315/315	OT315E22WP	1SCA022810R0900	1	4.0
3	400	400/400	OT400E03WP	1SCA022809R8310	1	3.4
4	400	400/400	OT400E04WP	1SCA022809R8810	1	4.0
3	400	400/400	OT400E12WP	1SCA022809R9200	1	3.4
4	400	400/400	OT400E22WP	1SCA022810R0570	1	4.0

Shafts and handles included as standard

Suitable for switches	Included shaft	Included handle	Included terminal bolts
OT200…250_P	OXP6X210	OHB65J6	M8x25
OT315…400_P	OXP12X185	OHB95J12	M10x30

Ordering information
Front operated switch-disconnectors

OT1000...1600E03W4P
S07084

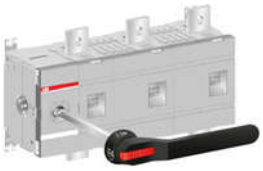

OT1000...1600E03W8P
S07085



OT2000...2500E03W4P
S07086



OT2000...2500E03W8P
S07087



Switch-disconnectors with wide phase distance, base mounting

Including a black ON-OFF plastic handle and shaft as standard. The handle is IP65 protected, padlockable in the OFF-position and with door interlock in the ON-position. The shaft is adjustable for a range of installation depths.

Number of poles	I_{th} (open) [A]	Rated operat. currents AC22A/ AC23A 400V [A/A]	Type	Order number	Units/ type [pcs]	Weight/ unit [kg]
3	1000	1000/1000	OT1000E03W4P	1SCA022871R7310	1	19.8
4	1000	1000/1000	OT1000E04W4P	1SCA100762R1001	1	24.0
3	1000	1000/1000	OT1000E03W8P	1SCA022871R8110	1	22.0
3	1250	1250/1250	OT1250E03W4P	1SCA022866R1920	1	19.8
4	1250	1250/1250	OT1250E04W4P	1SCA022866R2220	1	24.0
3	1250	1250/1250	OT1250E03W8P	1SCA022871R8540	1	22.0
3	1600	1600/1250	OT1600E03W4P	1SCA022865R9860	1	22.0
4	1600	1600/1250	OT1600E04W4P	1SCA022866R1090	1	26.0
3	1600	1600/1250	OT1600E03W8P	1SCA022871R8970	1	24.0
3	2000	2000/-	OT2000E03W4P	1SCA108042R1001	1	42.0
4	2000	2000/-	OT2000E13W4P	1SCA109284R1001	1	48.0
3	2000	2000/-	OT2000E03W8P	1SCA108045R1001	1	42.0
4	2000	2000/-	OT2000E13W8P	1SCA109283R1001	1	48.0
3	2500	2500/-	OT2500E03W4P	1SCA108047R1001	1	49.0
4	2500	2500/-	OT2500E13W4P	1SCA109285R1001	1	49.0
3	2500	2500/-	OT2500E03W8P	1SCA108049R1001	1	49.0
4	2500	2500/-	OT2500E13W8P	1SCA109286R1001	1	49.0

W4 = Phase distance 140 mm
W8 = Phase distance 185 mm

Shafts and handles included as standard

Suitable for switches	Included shaft	Included handle	Included terminal bolts
OT1000...1250_P	OXP12X280	OHB274J12	M12X50
OT1600_P	OXP12X280	OHB274J12	M12X60
OT2000...2500_P	OXP12X280	OHB274J12	M12X60

Ordering information
Front operated, non-fusible disconnect switches

OT16...40F3
S04049



OT16...40FT3
S00260A



OT63...80F3
S04050



OT63...80FT3
S00690A



OT30...100F3
S04051



UL/CSA non-fusible disconnect switches, base/DIN-rail mounting and door mounting

The type and ordering numbers are for one piece.
_F_ -types = base and DIN-rail mounting, _FT_ -types = door mounting

Number of poles	Ampere rating [A]	Horsepower rating 3-phase [HP] 240V	480V	600V	Type	Order number	Delivery batch [pcs]	Weight/ unit [kg]
Shafts and handles need to be ordered separetely.								
3	20	5	10	10	OT16F3	1SCA104811R1001	10	0.11
4	20	5	10	10	OT16F4N2	1SCA104829R1001	10	0.14
3	20	5	10	10	OT16FT3	1SCA104838R1001	10	0.13
4	20	5	10	10	OT16FT4N2	1SCA105711R1001	10	0.16
3	30	7,5	15	20	OT25F3	1SCA104857R1001	10	0.11
4	30	7,5	15	20	OT25F4N2	1SCA104886R1001	10	0.14
3	30	7,5	15	20	OT25FT3	1SCA104884R1001	10	0.13
4	30	7,5	15	20	OT25FT4N2	1SCA104900R1001	10	0.16
3	40	10	20	25	OT40F3	1SCA104902R1001	10	0.11
4	40	10	20	25	OT40F4N2	1SCA104932R1001	10	0.14
3	40	10	20	25	OT40FT3	1SCA104940R1001	10	0.13
4	40	10	20	25	OT40FT4N2	1SCA104956R1001	10	0.16
3	60	15	30	30	OT63F3	1SCA105332R1001	10	0.27
4	60	15	30	30	OT63F4N2	1SCA105365R1001	10	0.30
3	60	15	30	30	OT63FT3	1SCA105382R1001	10	0.28
4	60	15	30	30	OT63FT4N2	1SCA105393R1001	10	0.35
3	80	20	40	40	OT80F3	1SCA105798R1001	10	0.27
4	80	20	40	40	OT80F4N2	1SCA105413R1001	10	0.30
3	80	20	40	40	OT80FT3	1SCA105431R1001	10	0.28
4	80	20	40	40	OT80FT4N2	1SCA105499R1001	10	0.35
3	30	10	20	30	OT30F3	1SCA105068R1001	10	0.36
4	30	10	20	30	OT30F4N2	1SCA108347R1001	10	0.50
3	60	20	40	40	OT60F3	1SCA105076R1001	10	0.36
4	60	20	40	40	OT60F4N2	1SCA108348R1001	10	0.50
3	100	30	50	50	OT100F3	1SCA105004R1001	10	0.36
4	100	30	50	50	OT100F4N2	1SCA105018R1001	10	0.50

Approvals:
- OT16...80: UL 508, CSA 22-2 # 14
- OT30...100: UL 98, CSA 22-2 # 4
- IEC 60947-3

Ordering information
Front operated, non-fusible disconnect switches

OT200U03P
S01632A



OT400U03P
S01838A

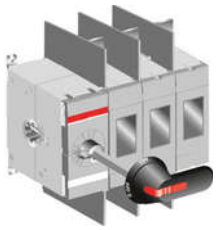

OT600U03P
S02105A



OT800...1200U03P
S07080



OETL-NF1600...2000P
S00948A

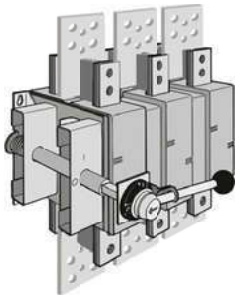

UL/CSA non-fusible disconnect switches, base mounting

Number of poles	Ampere rating [A]	Horsepower rating 3-phase [HP] 240V	480V	600V	Type	Order number	Units/ type [pcs]	Weight/ unit [kg]
Including handle: NEMA 1, 3R, 12, IP65 and shaft								
3	200	75	150	200	OT200U03P	1SCA022709R9920	1	1.8
4	200	75	150	200	OT200U04P	1SCA022710R0610	1	2.2
3	200	75	150	200	OT200U12P	1SCA022752R2010	1	1.8
4	200	75	150	200	OT200U22P	1SCA022741R8880	1	2.2
3	400	125	250	350	OT400U03P	1SCA022718R9670	1	3.4
4	400	125	250	350	OT400U04P	1SCA022719R1900	1	4.0
3	400	125	250	350	OT400U12P	1SCA022754R6960	1	3.4
4	400	125	250	350	OT400U22P	1SCA022762R7290	1	4.0
3	600	200	450	500	OT600U03P	1SCA022718R9830	1	6.5
4	600	200	450	500	OT600U04P	1SCA022719R2200	1	7.7
3	600	200	450	500	OT600U12P	1SCA022753R7710	1	6.4
4	600	200	450	500	OT600U22P	1SCA022753R7890	1	7.7
3	800	250	500	500	OT800U03P	1SCA105665R1001	1	19.0
4	800	250	500	500	OT800U04P	1SCA105667R1001	1	22.0
3	800	250	500	500	OT800U12P	1SCA106128R1001	1	19.0
4	800	250	500	500	OT800U22P	1SCA106125R1001	1	22.0
3	1200		-	-	OT1200U03P	1SCA022860R6910	1	19.0
4	1200		-	-	OT1200U04P	1SCA022860R7120	1	22.0
3	1200		-	-	OT1200U12P	1SCA022871R9270	1	19.0
4	1200		-	-	OT1200U22P	1SCA105654R1001	1	22.0
Including handle, NEMA 1, 3R, 4, 4x, 12, IP65, shaft and busbar connections								
3	1600	-	-	-	OETL-NF1600P	1SCA022282R0690	1	65.0
3	2000[1)]	-	-	-	OETL-NF2000P	1SCA022282R0850	1	65.0

[1)] 480 VAC max.

Approvals:
- OT160...1200: UL 98, CSA 22-2 # 4
- OETL-NF: UL98, CSA 22-22 #4
- IEC 60947-3

Shafts and handles included as standard

Suitable for switches	Included shaft	Included handle	Included terminal bolts
OT200U_P	OXP6X210	OHB65J6	M8x25
OT400U_P	OXP12X185	OHB95J12	M10x30
OT600U_P	OXP12X185	OHB125J12	M12x40
OT800…1200U_P	OXP12X280	OHB274J12	M12x60
OETL-NF1600…2000	OXP12X325	YASDA8	M12x60

Ordering information
Front operated DC switch-disconnectors

OTDC16...32F2
S07111



OTDC16...32F3
S07110



OTDC16...32F4
S07109



DC switch-disconnectors, base and DIN-rail mounting

Include protected terminal clamps, IP20. Shafts and handles need to be ordered separately. The type and the ordering numbers are for one piece.

Up to 660 VDC

Number of poles	I_{th} (open) [A]	Rated operat. current [A] DC21B/ 660V	Type	Order number	Delivery batch [pcs]	Weight/ unit [kg]
2	25	16	OTDC16F2	1SCA121454R1001	10	0.15
2	32	25	OTDC25F2	1SCA121455R1001	10	0.15
2	45	32	OTDC32F2	1SCA121456R1001	10	0.15

Up to 1000 VDC

Number of poles	I_{th} (open) [A]	Rated operat. current [A] DC21B/ 1000V	Type	Order number	Delivery batch [pcs]	Weight/ unit [kg]
3	25	16	OTDC16F3	1SCA121457R1001	10	0.20
3	32	25	OTDC25F3	1SCA121458R1001	10	0.20
3	45	32	OTDC32F3	1SCA121459R1001	10	0.20

Up to 1000 VDC or 2x660 VDC[1)]

Number of poles	I_{th} (open) [A]	Rated operat. current [A] DC21B/ 1000V	Type	Order number	Delivery batch [pcs]	Weight/ unit [kg]
4	25	16	OTDC16F4	1SCA121461R1001	10	0.25
4	32	25	OTDC25F4	1SCA121462R1001	10	0.25
4	45	32	OTDC32F4	1SCA121463R1001	10	0.25

[1)] 1000V with all poles in series, 660V with 2 poles in series

Ordering information
Front operated DC switch-disconnectors

OTDC16...32FT2



OTDC16...32FT3



OTDC16...32FT4



DC switch-disconnectors, door mounting

Include protected terminal clamps, IP20. Shafts and handles need to be ordered separately. The type and the ordering numbers are for one piece.

Up to 660 VDC

Number of poles	I_{th} (open) [A]	Rated operat. current [A] DC21B/ 660V	Type	Order number	Delivery batch [pcs]	Weight/ unit [kg]
2	25	16	OTDC16FT2	1SCA123839R1001		0.15
2	32	25	OTDC25FT2	1SCA123842R1001		0.15
2	45	32	OTDC32FT2	1SCA123845R1001		0.15

Up to 1000 VDC

Number of poles	I_{th} (open) [A]	Rated operat. current [A] DC21B/ 1000V	Type	Order number	Delivery batch [pcs]	Weight/ unit [kg]
3	25	16	OTDC16FT3	1SCA123840R1001		0.20
3	32	25	OTDC25FT3	1SCA123843R1001		0.20
3	45	32	OTDC32FT3	1SCA123846R1001		0.20

Up to 1000 VDC or 2x660 VDC[1)]

Number of poles	I_{th} (open) [A]	Rated operat. current [A] DC21B/ 1000V	Type	Order number	Delivery batch [pcs]	Weight/ unit [kg]
4	25	16	OTDC16FT4	1SCA123841R1001		0.25
4	32	25	OTDC25FT4	1SCA123844R1001		0.25
4	45	32	OTDC32FT4	1SCA123847R1001		0.25

[1)] 1000V with all poles in series, 660V with 2 poles in series

Ordering information
Side operated switch-disconnectors

OT200ES03
S02200A



OT200ES03K
S02201A



Side operated switch-disconnectors, base mounting

Number of poles	I_{th} (open) [A]	Rated operat. currents AC22A/ AC23A 400V [A/A]	Type	Order number	Units/ type [pcs]	Weight/ unit [kg]
Handle and shaft have to be ordered separately						
3	200	200/160	OT160EVS03	1SCA120563R1001	1	1.8
4	200	200/160	OT160EVS04	1SCA120564R1001	1	2.2
3	200	200/200	OT200ES03	1SCA022860R0200	1	1.8
4	200	200/200	OT200ES04	1SCA022860R0540	1	2.2
3	250	250/250	OT250ES03	1SCA022860R0890	1	1.8
4	250	250/250	OT250ES04	1SCA022860R1010	1	2.2
3	315	315/315	OT315ES03	1SCA022860R1270	1	3.4
4	315	315/315	OT315ES04	1SCA022860R1510	1	4.0
3	400	400/400	OT400ES03	1SCA022860R1780	1	3.4
4	400	400/400	OT400ES04	1SCA022860R1940	1	4.0
3	630	630/630	OT630ES03	1SCA022860R2240	1	7.0
4	630	630/630	OT630ES04	1SCA022860R2410	1	8.2
3	800	800/800	OT800ES03	1SCA022860R2670	1	7.0
4	800	800/800	OT800ES04	1SCA022860R2830	1	8.2
Including a black Test-ON-OFF direct mounting plastic handle and shaft as standard						
The handle is padlockable in the OFF-position.						
3	200	200/160	OT160EVS03K	1SCA120570R1001	1	1.9
4	200	200/160	OT160EVS04K	1SCA120565R1001	1	2.3
3	200	200/200	OT200ES03K	1SCA022860R0620	1	1.9
4	200	200/200	OT200ES04K	1SCA022860R0710	1	2.3
3	250	250/250	OT250ES03K	1SCA022860R0970	1	1.9
4	250	250/250	OT250ES04K	1SCA022860R1190	1	2.3
3	315	315/315	OT315ES03K	1SCA022860R1350	1	3.5
4	315	315/315	OT315ES04K	1SCA022860R1600	1	4.1
3	400	400/400	OT400ES03K	1SCA022860R1860	1	3.5
4	400	400/400	OT400ES04K	1SCA022860R2080	1	4.1
3	630	630/630	OT630ES03K	1SCA022860R2320	1	7.0
4	630	630/630	OT630ES04K	1SCA022860R2590	1	8.4
3	800	800/800	OT800ES03K	1SCA022860R2750	1	7.2
4	800	800/800	OT800ES04K	1SCA022860R2910	1	8.4

Terminal bolt kits included as standard

Suitable for switches	Included terminal bolts
OT160EV...250	M8x25
OT315...400	M10x30
OT630..800	M12x40

Ordering information
Earthing switches

OT1000...1250EM
S07065



OT1600EM
S07051



OT2000...2500EM
S07052



Earthing switches, bottom mounted

The mechanism is turned 90 degrees for space saving
Including terminal bolt kit, a black OFF - ⏚ plastic handle and shaft as standard. The handle is padlockable in OFF- and ⏚ -position.

Number of poles	I_{cw} / 1 s [kA]	I_{cw} / 0,25 s [kA]	I_{cm} peak [kA]	Type	Order number	Unit/ type [pcs]	Weight/ unit [kg]
I_{cw} / 1 s = 50 kA, I_{cm} = 110 kA (peak)							
3	50	50	110	OT1000EM03P	1SCA118937R1001	1	17.5
4	50	50	92	OT1000EM04P	1SCA118950R1001	1	20.0
3	50	50	110	OT1250EM03P	1SCA115708R1001	1	17.5
4	50	50	92	OT1250EM04P	1SCA118949R1001	1	20.0
3	50	50	110	OT1600EM03P	1SCA115815R1001	1	19.5
4	50	50	92	OT1600EM04P	1SCA118948R1001	1	22.5
I_{cw} / 1 s = 55 kA, I_{cw} / 0,25 s = 80 kA, I_{cm} = 176 kA (peak)							
3	55	80	176	OT2000EM03P	1SCA118939R1001	1	42.5
4	55	80	176	OT2000EM04P	1SCA118947R1001	1	49.5
3	55	80	176	OT2500EM03P	1SCA115835R1001	1	42.5
4	55	80	176	OT2500EM04P	1SCA118946R1001	1	49.5

Earthing switches with wide phase distances, bottom mounted

The mechanism is turned 90 degrees for space saving
Including terminal bolt kit, a black OFF - ⏚ plastic handle and shaft as standard. The handle is padlockable in OFF- and ⏚ -position. W4=140mm, W8=185mm.

Number of poles	I_{cw} / 1 s [kA]	I_{cw} / 0,25 s [kA]	I_{cm} peak [kA]	Type	Order number	Unit/ type [pcs]	Weight/ unit [kg]
I_{cw} / 1 s = 50 kA, I_{cm} = 110 kA (peak)							
3	50	50	110	OT1250EM03W4P	1SCA115805R1001	1	20.5
3	50	50	110	OT1250EM03W8P	1SCA115810R1001	1	22.5
4	50	50	92	OT1250EM04W4P	1SCA118940R1001	1	24.5
4	50	50	92	OT1250EM04W8P	1SCA118941R1001	1	26.5
3	50	50	110	OT1600EM03W4P	1SCA115822R1001	1	20.5
3	50	50	110	OT1600EM03W8P	1SCA115827R1001	1	22.5
4	50	50	92	OT1600EM04W4P	1SCA118942R1001	1	24.5
4	50	50	92	OT1600EM04W8P	1SCA118944R1001	1	26.5
I_{cw} / 1 s = 55 kA, I_{cw} / 0,25 s = 80 kA, I_{cm} = 176 kA (peak)							
3	55	80	176	OT2500EM03W4P	1SCA115840R1001	1	45.0
3	55	80	176	OT2500EM03W8P	1SCA115843R1001	1	47.0
4	55	80	176	OT2500EM04W4P	1SCA118943R1001	1	52.0
4	55	80	176	OT2500EM04W8P	1SCA118945R1001	1	54.0

Ordering information
Earthing switches

OT1000...1250EP_
S07053



OT1600EP_
S07054



OT2000...2500EP_
S07055



Earthing switches, base mounted

Including terminal bolt kit, a black OFF - ⏚ plastic handle and shaft as standard.
The handle is padlockable in OFF- and ⏚ -position

Number of poles	I_{cw} / 1 s [kA]	I_{cw} / 0,25 s [kA]	I_{cm} peak [kA]	Type	Order number	Unit/ type [pcs]	Weight/ unit [kg]
I_{cw} / 1 s = 50 kA, I_{cm} = 110 kA (peak)							
3	50	50	110	OT1000EP03P	1SCA118451R1001	1	17.0
4	50	50	92	OT1000EP04P	1SCA118452R1001	1	19.5
3	50	50	110	OT1250EP03P	1SCA118453R1001	1	17.0
4	50	50	92	OT1250EP04P	1SCA118454R1001	1	19.5
3	50	50	110	OT1600EP03P	1SCA118455R1001	1	19.0
4	50	50	92	OT1600EP04P	1SCA118456R1001	1	22.0
I_{cw} / 1 s = 55 kA, I_{cw} / 0,25 s = 80 kA, I_{cm} = 176 kA (peak)							
3	55	80	176	OT2000EP03P	1SCA118457R1001	1	42.0
4	55	80	176	OT2000EP04P	1SCA118458R1001	1	49.0
3	55	80	176	OT2500EP03P	1SCA118459R1001	1	42.0
4	55	80	176	OT2500EP04P	1SCA118460R1001	1	49.0

Ordering information
Motorized switch-disconnectors

OTM160...250_M_
S07049



OTM315...400_M_
S07006



OTM630...800_M_
S07050



OTM1000...1250_M_
S07048



OTM1600_M_
S07007



OTM2000...2500_M_
S07008



Motorized switch-disconnectors OTM

Including a handle for manual operation, bolt kit with nut and washers for all terminals, male connectors for control circuit and a handle and spare fuse storage clip. Type codes for motor voltage U_e = 220...240 VAC or VAC/DC, see table below. IEC type with standard phase distance.

Rated current AC-22A/AC-23A ≤ 690V [A]	Voltage U_e 220...240V	Number of poles	Type	Order number	Units/ type [pcs]	Weight/ unit [kg]
160/160	AC/DC	2	OTM160E2M230V	1SCA121183R1001	1	4.3
160/160	AC	3	OTM160E3M230C	1SCA115283R1001	1	4.6
160/160	AC	4	OTM160E4M230C	1SCA115293R1001	1	5.0
200/200	AC/DC	2	OTM200E2M230V	1SCA121184R1001	1	4.3
200/200	AC	3	OTM200E3M230C	1SCA115284R1001	1	4.6
200/200	AC	4	OTM200E4M230C	1SCA115292R1001	1	5.0
250/250	AC/DC	2	OTM250E2M230V	1SCA121185R1001	1	4.3
250/250	AC	3	OTM250E3M230C	1SCA115285R1001	1	4.6
250/250	AC	4	OTM250E4M230C	1SCA115290R1001	1	5.0
315/315	AC/DC	2	OTM315E2M230V	1SCA121189R1001	1	7.7
315/315	AC	3	OTM315E3M230C	1SCA115334R1001	1	8.4
315/315	AC	4	OTM315E4M230C	1SCA115335R1001	1	9.0
400/400	AC/DC	2	OTM400E2M230V	1SCA121199R1001	1	7.7
400/400	AC	3	OTM400E3M230C	1SCA115333R1001	1	8.4
400/400	AC	4	OTM400E4M230C	1SCA115336R1001	1	9.0
630/630	AC/DC	2	OTM630E2M230V	1SCA121190R1001	1	11.6
630/630	AC	3	OTM630E3M230C	1SCA115354R1001	1	17.4
630/630	AC	4	OTM630E4M230C	1SCA115357R1001	1	18.9
800/800	AC/DC	2	OTM800E2M230V	1SCA121197R1001	1	11.6
800/800	AC	3	OTM800E3M230C	1SCA115355R1001	1	17.4
800/800	AC	4	OTM800E4M230C	1SCA115356R1001	1	18.9
1000/1000	AC/DC	2	OTM1000E2M230V	1SCA121396R1001	1	32.4
1000/1000	AC	3	OTM1000E3M230C	1SCA115364R1001	1	37.0
1000/1000	AC	4	OTM1000E4M230C	1SCA115368R1001	1	42.0
1250/1250	AC/DC	2	OTM1250E2M230V	1SCA121193R1001	1	32.4
1250/1250	AC	3	OTM1250E3M230C	1SCA115365R1001	1	37.0
1250/1250	AC	4	OTM1250E4M230C	1SCA115367R1001	1	42.0
1600/1250	AC	3	OTM1600E3M230C	1SCA115366R1001	1	39.0
1600/1250	AC	4	OTM1600E4M230C	1SCA115369R1001	1	44.0
2000[1]/-	AC/DC	2	OTM2000E2M230V	1SCA121201R1001	1	32.4
2000[1]/-	AC	3	OTM2000E3M230C	1SCA115372R1001	1	47.0
2000[1]/-	AC	4	OTM2000E4M230C	1SCA115374R1001	1	55.0
2500[1]/-	AC/DC	2	OTM2500E2M230V	1SCA121195R1001	1	32.4
2500[1]/-	AC	3	OTM2500E3M230C	1SCA115373R1001	1	47.0
2500[1]/-	AC	4	OTM2500E4M230C	1SCA115375R1001	1	55.0

[1] Category B, infrequent operation

Handle and bolt kits included as standard

Suitable for switch disconnectors	Handle+shaft kit	Bolt kit
OTM160…250	OTV250EMK	M8x25
OTM315…400	OTV400EMK	M10X30
OTM630…800	OTV800EMK	M12X40
OTM1000…1250 / OTM1600…2500	OTV1000EMK	M12X50 / M12X60

Ordering information
Motorized switch-disconnectors

OTM160...250_WM_
S07220



Motorized switch-disconnectors OTM with wide phase distance

Including a handle for manual operation, bolt kit with nut and washers for all terminals, male connectors for control circuit and a handle and spare fuse storage clip. Type codes for motor voltage U_e = 220...240 VAC or VAC/DC, see table below.

Rated current AC-22A/ AC-23A ≤ 690V [A]	Voltage U_e 220...240V	Number of poles	Type	Order number	Units/ type [pcs]	Weight/ unit [kg]
160/160	AC/DC	2	OTM160E2WM230V	1SCA121186R1001	1	4.3
160/160	AC	3	OTM160E3WM230C	1SCA115286R1001	1	4.7
160/160	AC	4	OTM160E4WM230C	1SCA115295R1001	1	5.1
200/200	AC/DC	2	OTM200E2WM230V	1SCA121187R1001	1	4.3
200/200	AC	3	OTM200E3WM230C	1SCA115288R1001	1	4.7
200/200	AC	4	OTM200E4WM230C	1SCA115296R1001	1	5.1
250/250	AC/DC	2	OTM250E2WM230V	1SCA121188R1001	1	4.3
250/250	AC	3	OTM250E3WM230C	1SCA115289R1001	1	4.7
250/250	AC	4	OTM250E4WM230C	1SCA115297R1001	1	5.1

Handle and bolt kits included as standard

Suitable for switch disconnectors	Handle+shaft kit	Bolt kit
OTM160…250	OTV250EMK	M8x25

Accessories
Selection overview

OT16F...OT125F

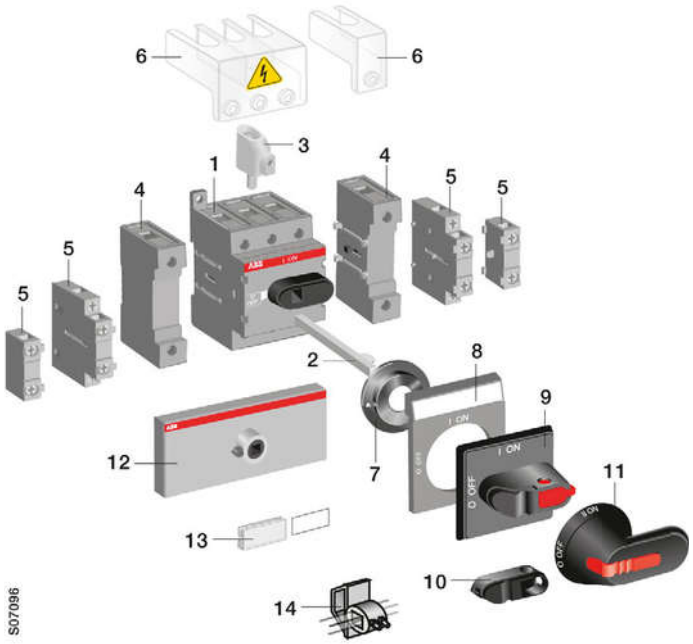

1 Switch-disconnector | 2 Extended shaft | 3 Terminal clamp | 4 Fourth pole, N- and PE-terminals | 5 Auxiliary contact | 6 Terminal shroud | 7 Shaft aligment ring | 8 Legend plate | 9 Selector type handle | 10 Handle knob | 11 Pistol type handle | 12 Conversion kit | 13 Labelling accessories | 14 Cam attachment for interlocking

OT16FT...OT125FT

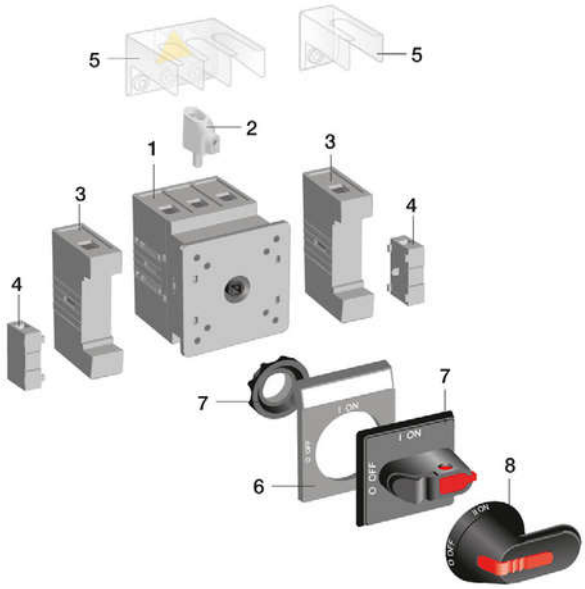

1 Switch-disconnector | 2 Terminal clamp | 3 Fourth pole, N- and PE-terminals | 4 Auxiliary contact | 5 Terminal shroud | 6 Legend plate | 7 Selector type handle | 8 Pistol type handle

Accessories
Selection overview

OTDC16...32

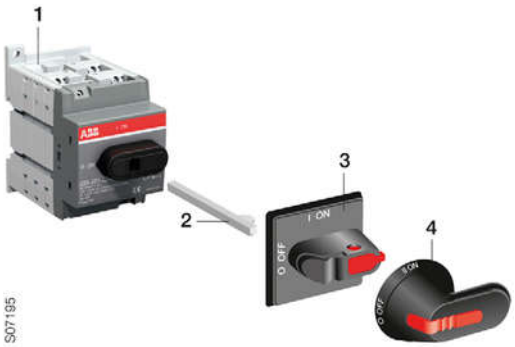

1 Switch-disconnector | 2 Extended shaft | 3 Selector type handle | 4 Pistol type handle

OTDC16...32FT



1 Switch-disconnector | 2 Legend plate | 3 Selector type handle | 4 Pistol type handle

OT160EV...OT2500

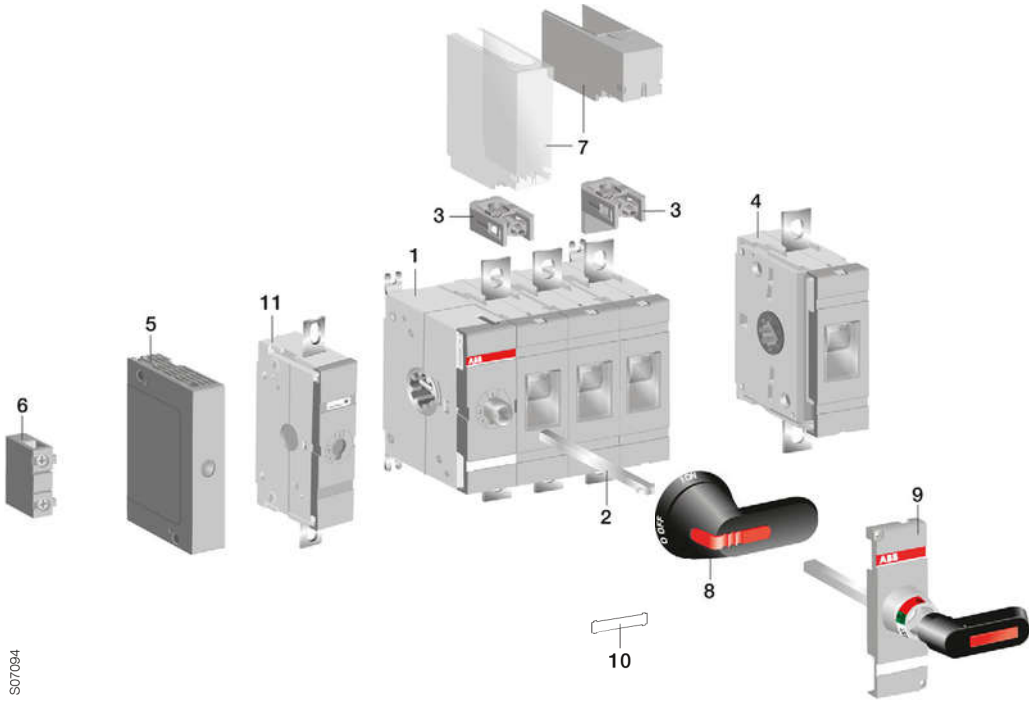

1 Switch-disconnector | 2 Extended shaft | 3 Terminal clamp | 4 Fourth pole | 5 Module for auxiliary contact | 6 Auxiliary contact | 7 Terminal shroud | 8 Pistol type handle | 9 Direct mounting type handle | 10 Labelling accessories | 11 Detachable neutral link

Accessories
Selection overview

OTM160...OTM2500

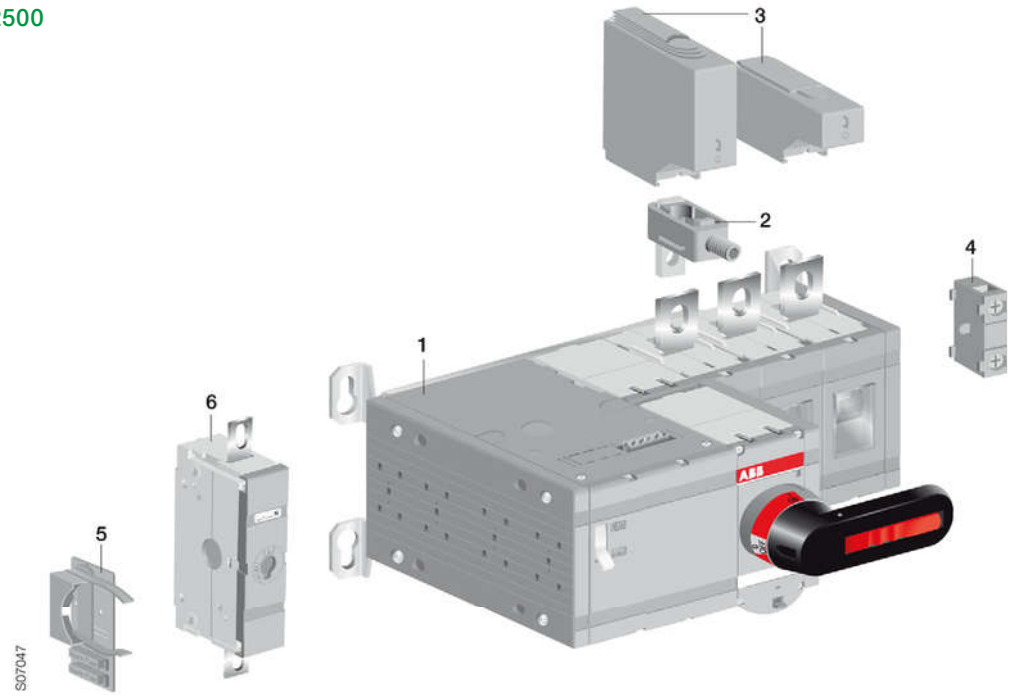

1 Motorized switch-disconnector | 2 Terminal clamp | 3 Terminal shroud | 4 Auxiliary contact | 5 Storage for handle and fuses | 6 Detachable neutral link

Ordering information
Accessories

OHBS12
S01472A



OHRS2_
S01368A



OHBS1_
S00684A



OHRS3_
S01369A



OHBS9_
S00535A



Handle knobs, for base and DIN-rail mounted switches

Mounting directly to the switch, no shaft needed.

Colour	Handle length [mm]	Suitable for switches	Type	Order number	Units/ type [pcs]	Weight/ unit [kg]
Padlockable in 0-position with one padlock with bail diameter 5 mm						
Black	37	OT16…40F3/F4	OHBS12	1SCA108252R1001	10	0.01
Red	37	OT16…40F3/F4	OHRS12	1SCA108253R1001	10	0.01
Black	40	OT63...125F3/F4, OT16...40F6/F8, OTDC16…32F	OHBS2	1SCA109089R1001	10	0.01
Black	40	OT63...125F3/F4, OT16...40F6/F8, OTDC16…32F	OHBS2/1	1SCA109090R1001	1	0.01
Red	40	OT63...125F3/F4, OT16...40F6/F8, OTDC16…32F	OHRS2	1SCA108598R1001	10	0.01
Red	40	OT63...125F3/F4, OT16...40F6/F8, OTDC16…32F	OHRS2/1	1SCA108599R1001	1	0.01
Non-padlockable						
Black	31	OT16...80F3/F4, OTDC16…32F	OHBS1	1SCA109087R1001	10	0.01
Black	31	OT16...80F3/F4, OTDC16…32F	OHBS1/1	1SCA109088R1001	1	0.01
Red	31	OT16...80F3/F4, OTDC16…32F	OHRS1	1SCA109095R1001	10	0.01
Red	31	OT16...80F3/F4, OTDC16…32F	OHRS1/1	1SCA109096R1001	1	0.01
Black	39	OT16...125F3/F4, OT16...40F6/F8, OTDC16…32F	OHBS3	1SCA108320R1001	10	0.01
Black	39	OT16...125F3/F4, OT16...40F6/F8, OTDC16…32F	OHBS3/1	1SCA108319R1001	1	0.01
Red	39	OT16...125F3/F4, OT16...40F6/F8, OTDC16…32F	OHRS3	1SCA108667R1001	10	0.01
Red	39	OT16...125F3/F4, OT16...40F6/F8, OTDC16…32F	OHRS3/1	1SCA108688R1001	1	0.01
Black	72	OT63...125F6/F8	OHBS9	1SCA108665R1001	10	0.01
Black	72	OT63...125F6/F8	OHBS9/1	1SCA108689R1001	1	0.01
Red	72	OT63...125F6/F8	OHRS9	1SCA108666R1001	10	0.01
Red	72	OT63...125F6/F8	OHRS9/1	1SCA108690R1001	1	0.01

Handle type	Shaft through the handle	45 mm cut-out enable*
OHBS1_ , OHRS1_	No	Yes
OHBS12, OHRS12	Yes	Yes
OHBS2_ , OHRS2_	No	Yes
OHBS3_ , OHRS3_	No	Yes
OHBS9_ , OHRS9_	No	No

* in I-position the handle shall remain within the cut-out height

Ordering information
Accessories

OH_1_
S00395A



OH_3_
S00687A



OH_2_
S00396A



OHBS2_AJEH



Selector type handles, for base and DIN-rail mounted switches

For shaft diameter 6 mm, door drilling 22.5 mm. The type and the ordering numbers are for one piece. Indication I-O and ON-OFF.

Colour	Suitable for switches	Type	Order number	Delivery batch [pcs]	Weight/ unit [kg]
IP54 handles, NEMA 1					
Black	OT16...80F, OTDC16...32F	OHBS1AH	1SCA102680R1001	150	0.05
Red-yellow	OT16...80F, OTDC16...32F	OHYS1AH	1SCA105290R1001	150	0.05
Silver	OT16...80F, OTDC16...32F	OHSS1AH	1SCA105274R1001	150	0.05
Grey	OT16...80F, OTDC16...32F	OHGS1AH	1SCA105261R1001	150	0.05
Door interlock in ON-position					
Black	OT16...80F, OTDC16...32F	OHBS1AH1	1SCA105210R1001	150	0.05
Red-yellow	OT16...80F, OTDC16...32F	OHYS1AH1	1SCA105291R1001	150	0.05
Silver	OT16...80F, OTDC16...32F	OHSS1AH1	1SCA105275R1001	150	0.05
Grey	OT16...80F, OTDC16...32F	OHGS1AH1	1SCA105262R1001	150	0.05
Padlockable with one padlock with bail diameter 5...6.3 mm					
Black	OT16...125F, OTDC16...32F	OHBS3AH	1SCA105234R1001	150	0.05
Red-yellow	OT16...125F, OTDC16...32F	OHYS3AH	1SCA105325R1001	150	0.05
Silver	OT16...125F, OTDC16...32F	OHSS3AH	1SCA105283R1001	150	0.05
Grey	OT16...125F, OTDC16...32F	OHGS3AH	1SCA105270R1001	150	0.05
Padlockable with one padlock with bail diameter 5...6.3 mm, door interlock in ON-position					
Black	OT16...125F, OTDC16...32F	OHBS3AH1	1SCA105235R1001	150	0.05
Red-yellow	OT16...125F, OTDC16...32F	OHYS3AH1	1SCA105326R1001	150	0.05
Silver	OT16...125F, OTDC16...32F	OHSS3AH1	1SCA105284R1001	150	0.05
Grey	OT16...125F, OTDC16...32F	OHGS3AH1	1SCA105271R1001	150	0.05
IP65 handles, NEMA 1, 3R, 12					
Padlockable with max. 3 padlocks with bail diameter 5...8 mm, door interlock in ON-position, defeatable					
Black	OT16...125F, OTDC16...32F	OHBS2AJ	1SCA105213R1001	120	0.07
Red-yellow	OT16...125F, OTDC16...32F	OHYS2AJ	1SCA105296R1001	120	0.07
Silver	OT16...125F, OTDC16...32F	OHSS2AJ	1SCA105278R1001	120	0.07
Grey	OT16...125F, OTDC16...32F	OHGS2AJ	1SCA105265R1001	120	0.07
Padlockable with max. 3 padlocks with bail diameter 5...8 mm, door interlock in ON-position					
Black	OT16...125F, OTDC16...32F	OHBS2AJ1	1SCA105215R1001	120	0.07
Red-yellow	OT16...125F, OTDC16...32F	OHYS2AJ1	1SCA105297R1001	120	0.07
Silver	OT16...125F, OTDC16...32F	OHSS2AJ1	1SCA105279R1001	120	0.07
Grey	OT16...125F, OTDC16...32F	OHGS2AJ1	1SCA105266R1001	120	0.07

Selector type handle with metal hasp

Colour	Suitable for switches	Type	Order number	Delivery batch [pcs]	Weight/ unit [kg]
IP65 handles, NEMA 1, 3R, 12					
Padlockable with max. 3 padlocks, door interlock in the ON-position, defeatable					
Black	OT16...125F, OTDC16...32F	OHBS2AJEH	1SCA108230R1001	120	0.07

- Door interlocking in ON-position means that the door can not be opened, when the handle is in ON-position. This can be defeated in IP65 types to allow authorized personnel access for inspection.

Ordering information
Accessories

OH_1_
S00395A



OH_3_
S00687A



OH_2_
S00396A



Snap-on mounting
S00268A

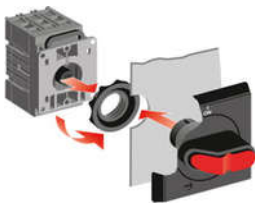

Screw mounting
S00267A

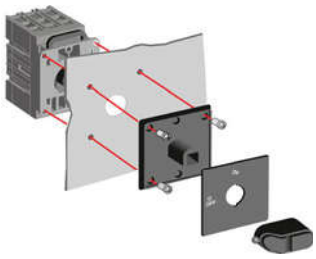

OHZX6
S01612A



Selector type handles, for door mounted switches

Indication I-O and ON-OFF. No separate shaft needed.
The type and the ordering numbers are for one piece.

Colour	Suitable for switches	Type	Order number	Units/ type [pcs]	Weight/ unit [kg]
Snap-on mounting, door drilling 22,5 mm					
No padlocking, IP54, NEMA 1					
Black	OT16...40FT, OTDC16...32FT	OHBS1PH	1SCA105211R1001	150	0.05
Red-yellow	OT16...40FT, OTDC16...32FT	OHYS1PH	1SCA105294R1001	150	0.05
Silver	OT16...40FT, OTDC16...32FT	OHSS1PH	1SCA105276R1001	150	0.05
Grey	OT16...40FT, OTDC16...32FT	OHGS1PH	1SCA105263R1001	150	0.05
Padlockable with one padlock, IP54, NEMA 1					
Black	OT16...40FT, OTDC16...32FT	OHBS3PH	1SCA105236R1001	150	0.05
Red-yellow	OT16...40FT, OTDC16...32FT	OHYS3PH	1SCA105327R1001	150	0.05
Silver	OT16...40FT, OTDC16...32FT	OHSS3PH	1SCA105285R1001	150	0.05
Grey	OT16...40FT, OTDC16...32FT	OHGS3PH	1SCA105272R1001	150	0.05
Padlockable with max. 3 padlocks, IP65, NEMA 1, 3R, 12					
Black	OT16...40FT, OTDC16...32FT	OHBS2PJ	1SCA105231R1001	120	0.07
Red-yellow	OT16...40FT, OTDC16...32FT	OHYS2PJ	1SCA105322R1001	120	0.07
Silver	OT16...40FT, OTDC16...32FT	OHSS2PJ	1SCA105280R1001	120	0.07
Grey	OT16...40FT, OTDC16...32FT	OHGS2PJ	1SCA105268R1001	120	0.07
Screw mounting, hole distance 36 mm					
No padlocking, IP54, NEMA 1					
Black	OT16...80FT, OTDC16...32FT	OHBS1RH	1SCA105212R1001	150	0.05
Red-yellow	OT16...80FT, OTDC16...32FT	OHYS1RH	1SCA105295R1001	150	0.05
Silver	OT16...80FT, OTDC16...32FT	OHSS1RH	1SCA105277R1001	150	0.05
Grey	OT16...80FT, OTDC16...32FT	OHGS1RH	1SCA105264R1001	150	0.05
Padlockable with one padlock, IP54, NEMA 1					
Black	OT16...80FT, OTDC16...32FT	OHBS3RH	1SCA105237R1001	150	0.05
Red-yellow	OT16...80FT, OTDC16...32FT	OHYS3RH	1SCA105328R1001	150	0.05
Silver	OT16...80FT, OTDC16...32FT	OHSS3RH	1SCA105286R1001	150	0.05
Grey	OT16...80FT, OTDC16...32FT	OHGS3RH	1SCA105273R1001	150	0.05
Padlockable with max. 3 padlocks, IP65, hole distance 36/48 mm, NEMA 1, 3R, 12					
Black	OT16...125FT, OTDC16...32FT	OHBS2RJ	1SCA105232R1001	120	0.07
Red-yellow	OT16...125FT, OTDC16...32FT	OHYS2RJ	1SCA105323R1001	120	0.07
Silver	OT16...125FT, OTDC16...32FT	OHSS2RJ	1SCA105281R1001	120	0.07
Grey	OT16...125FT, OTDC16...32FT	OHGS2RJ	1SCA105269R1001	120	0.07

Pistol handle mounting kit for OT 100...125 FT_ switches

Pistol handle is not included

Black	OHZX6	1SCA022559R5670	10	0.01

- Door interlocking in ON-position means that the door can not be opened, when the handle is in ON-position. This can be defeated in IP65 types to allow authorized personnel access for inspection.

Ordering information
Accessories

OZ331_B



OZ331_RY



OZ371PB



Round padlockable handles, for base and DIN-rail mounted switches

Padlockable in 0-position, max 3 padlocks with max 8 mm hasp diameter. Indication I-O and ON-OFF

Colour	Suitable for switches	Type	Order number	Delivery batch [pcs]	Weight/ unit [kg]
One hole mounting handle, IP65, NEMA 4X outdoor, size 66x66					
Black	OT16...125F_	OZ331SPB	1SCA112983R1001	10	0.05
Red-yellow	OT16...125F_	OZ331SPRY	1SCA113097R1001	10	0.05
IP67, IP69K, NEMA 4X, size 66x66					
Black	OT16...125F_	OZ331P67B	1SCA111427R1001	10	0.04
Red-yellow	OT16...125F_	OZ331P67RY	1SCA111429R1001	10	0.04
Handles with door coupling in ON-position, not defeatable, IP65, NEMA 4X, size 66x66					
Shaft alignment ring for OZ371P_ handle, see page 53.					
Black	OT16...125F_	OZ371PB	1SCA111684R1001	10	0.05
Red-yellow	OT16...125F_	OZ371PRY	1SCA111685R1001	10	0.05

Ordering information
Accessories

OHY_
S00836A



OHB_
S00601A



OHB_
S00469A



OHB274J12
S07078



OHB_P
S02195A



Pistol type handles, for base and DIN-rail mounted switches

IP65, NEMA 1, 3R, 12, padlockable with three padlocks in OFF-position, door interlock in ON-position. Screw fixing from the back side of the handle. No screws on the front ensures double insulation. The type and the ordering numbers are for one piece.

Colour	Handle length [mm]	Suitable for switches	Type	Order number	Delivery batch [pcs]	Weight/ unit [kg]
For shaft diameter 6 mm, indication in types OHB and OHY: I-0, ON-OFF, in types OHG: I-0						
Black	45	OT16...125F	OHB45J6	1SCA022380R8770	100	0.10
Red-yellow	45	OT16...125F	OHY45J6	1SCA022380R8930	100	0.10
Grey	45	OT16...125F	OHG45J6	1SCA022380R8850	100	0.10
Black	65	OT160EV...250	OHB65J6	1SCA022380R9660	100	0.12
Red-yellow	65	OT160EV...250	OHY65J6	1SCA022380R9820	100	0.12
Grey	65	OT160EV...250	OHG65J6	1SCA022380R9740	100	0.12
Black	80	OT160EV...250	OHB80J6	1SCA022381R0240	100	0.14
Red-yellow	80	OT160EV...250	OHY80J6	1SCA022381R0410	100	0.14
Grey	80	OT160EV...250	OHG80J6	1SCA022381R0320	100	0.14
For shaft diameter 6 mm, indication: Test-OFF-ON/Test-0-I						
Black	65	OT160EV...250	OHB65J6T	1SCA022399R8110	100	0.12
Red-yellow	65	OT160EV...250	OHY65J6T	1SCA022456R9540	100	0.12
For shaft diameter 12 mm, indication OHB and OHY: I-0, ON-OFF, in types OHG: I-0						
Black	95	OT315...400	OHB95J12	1SCA022381R0830	90	0.16
Red-yellow	95	OT315...400	OHY95J12	1SCA022381R1050	90	0.16
Grey	95	OT315...400	OHG95J12	1SCA022381R0910	90	0.16
Black	125	OT630...800	OHB125J12	1SCA022381R1560	90	0.17
Red-yellow	125	OT630...800	OHY125J12	1SCA022381R1720	90	0.17
Grey	125	OT630...800	OHG125J12	1SCA022381R1640	90	0.17
Black	145	OT630...800	OHB145J12	1SCA022381R2110	90	0.17
Red-yellow	145	OT630...800	OHY145J12	1SCA022381R2370	90	0.17
Grey	145	OT630...800	OHG145J12	1SCA022381R2290	90	0.17
Black	274	OT1000...2500	OHB274J12	1SCA115920R1001	25	0.54
Red-yellow	274	OT1000...2500	OHY274J12	1SCA115919R1001	25	0.54
Black	330	OT1000...2500	OHB330J12	1SCA115922R1001	25	0.58
Red-yellow	330	OT1000...2500	OHY330J12	1SCA115921R1001	25	0.58
Black	2x150	OT1000...2500	OHB150J12P	1SCA022865R9430	50	0.17
Red-yellow	2x150	OT1000...2500	OHY150J12P	1SCA101586R1001	50	0.17
Black	2x200	OT1000...2500	OHB200J12P	1SCA022865R9510	50	0.40
Red-yellow	2x200	OT1000...2500	OHY200J12P	1SCA101587R1001	50	0.4
Black	275	OETL3150	OHB275J12	1SCA022381R2960	90	0.2
Red-yellow	275	OETL3150	OHY275J12	1SCA022381R3180	90	0.2
Grey	275	OETL3150	OHG275J12	1SCA022381R3000	90	0.2

- Door interlocking in ON-position means that the door can not be opened, when the handle is in ON-position. This can be defeated in IP65 types to allow authorized personnel access for inspection.
- NEMA 4, 4x pistol handles available on request.
- Handles padlockable in all positions available on request.

Ordering information
Accessories

Pistol type handles, for base and DIN-rail mounted switches

OHY_
S00836A



OHB_
S00601A



OHB_
S00469A



OHB274J12T
S07078



IP65, NEMA 1, 3R, 12, padlockable with three padlocks in OFF-position, door interlock in ON-position. Screw fixing from the back side of the handle. No screws on the front ensures double insulation. The type and the ordering numbers are for one piece.

Colour	Handle length [mm]	Suitable for switches	Type	Order number	Delivery batch [pcs]	Weight/ unit [kg]
For shaft diameter 12 mm, indication: Test-OFF-ON/Test-0-I						
Black	95	OT315...400	OHB95J12T	1SCA022736R1750	90	0.16
Red-yellow	95	OT315...400	OHY95J12T	1SCA022736R1910	90	0.16
Black	125	OT630...800	OHB125J12T	1SCA022652R2220	90	0.17
Red-yellow	125	OT630...800	OHY125J12T	1SCA022652R2310	90	0.17
Black	145	OT630...800	OHB145J12T	1SCA022652R2570	90	0.17
Red-yellow	145	OT630...800	OHY145J12T	1SCA022652R2650	90	0.17
Black	175	OT630...800	OHB175J12T	1SCA022708R0740	90	0.18
Red-yellow	175	OT630...800	OHY175J12T	1SCA111508R1001	90	0.18
Black	274	OT1000...2500	OHB274J12T	1SCA120250R1001	25	0.54
Black	330	OT1000...2500	OHB330J12T	1SCA120252R1001	25	0.58
Black	2x200	OT1000...2500	OHB200J12PT	1SCA106510R1001	50	0.4
Red-yellow	2x200	OT1000...2500	OHY200J12PT	1SCA111512R1001	50	0.4

- Door interlocking in ON-position means that the door can not be opened, when the handle is in ON-position. This can be defeated in IP65 types to allow authorized personnel access for inspection.
- NEMA 4, 4x pistol handles available on request.
- Handles padlockable in all positions available on request.

Ordering information
Accessories

OTV_
S01997A



Direct mounting handles for base mounted switches

Includes a shaft and a mechanism cover. Indication Test-OFF-ON/Test-O-I. Padlockable with three padlocks in OFF-position.

Colour	Handle length [mm]	Suitable for switches	Type	Order number	Units/ type [pcs]	Weight/ unit [kg]
Black	65	OT160EV…250	OTV250EK	1SCA022763R2700	1	0.10
Red-yellow	65	OT160EV…250	OTVY250EK	1SCA022772R7910	1	0.10
Black	95	OT315…400	OTV400EK	1SCA022763R2960	1	0.20
Red-yellow	95	OT315…400	OTVY400EK	1SCA022772R7830	1	0.20
Black	125	OT630…800	OTV800EK	1SCA022804R6340	1	0.30
Red-yellow	125	OT630...800	OTVY800EK	1SCA022810R2780	1	0.30
Black	274	OT1000…2500	OTV1000EK	1SCA106608R1001	1	0.75
Black	2x200	OT1000...2500	OTV1000EPK	1SCA121085R1001	1	0.90

OTV1000EK
S07100



OTV1000EPK
S07114



Metallic handles, for base mounted switches

Colour	Handle length [mm]	Suitable for switches	Type	Order number	Units/ type [pcs]	Weight/ unit [kg]
For shaft diameter 12 mm, IP65, NEMA 1, 3R, 4, 4x, 12						
Indication I-0, padlockable with 3 padlocks in OFF-position, door interlock in ON-position.						
Black	220	OETL3150	YASDA7	1SCA022071R3010	1	0.68
Black	320	OT1000…2500	YASDA35	1SCA104400R1001	1	0.80
Indication ON-OFF, padlockable with 3 padlocks in OFF-position, door interlock in ON-position.						
Black	220	OETL3150	YASDA8	1SCA022071R3270	1	0.68
For shaft diameter 12 mm, IP44						
Indication I-0-II, padlockable with 3 padlocks in OFF-position, door interlock in I- and II-position.						
Black	220	OETL3150	YASDA21	1SCA022098R9420	1	0.68
Black	320	OETL3150	YASDA6	1SCA022071R2890	1	0.80

YASDA_
S00097A



OHM_
S02140A



Stainless steel handles, for base mounted switches

Stainless steel handles, indication I-O/ON-OFF, padlockable with 3 padlocks in the OFF-position, door interlock in the ON-position, IP66 (NEMA 4X).

Colour	Handle length [mm]	Type	Order number	Units/ type [pcs]	Weight/ unit [kg]
For shaft diameter 6 mm					
Grey	65	OHM65L6	1SCA022739R1070	1	0.73
For shaft diameter 12 mm					
Grey	125	OHM125L12	1SCA022739R1150	1	0.76
Grey	175	OHM175L12	1SCA022739R1230	1	0.83
Grey	275	OHM275L12	1SCA022832R4840	1	0.96
Grey	2x200	OHM200L12P	1SCA104439R1001	1	2.00

OHM_P
S03010A



- Door interlocking in ON-position means that the door can not be opened, when the handle is in ON-position. This can be defeated in IP65 types to allow authorized personnel access for inspection.

Ordering information
Accessories

OH_E00S
S07004A



Handles for side operated switch-disconnectors

For mounting on the side of the enclosure. Padlockable with three padlocks in the OFF-position, door interlock in the ON-position, IP65. The position indications are rotated 90°.

Colour	Handle length [mm]	Type	Order number	Units/ type [pcs]	Weight/ unit [kg]
For shaft diameter 6 mm, IP65, Nema type 1, 3R, 12					
Plastic handles, black and red-yellow: I-O/ON-OFF, grey: I-O.					
Black	65	OHB65J6E00S	1SCA022382R9850	1	0.12
Red-yellow	65	OHY65J6E00S	1SCA022382R9930	1	0.12
Grey	65	OHG65J6E00S	1SCA022383R4510	1	0.12
Plastic handles, black and red-yellow: Test/I-O/ON-OFF, grey: Test/I-O.					
Black	65	OHB65J6TE00S	1SCA109016R1001	1	0.12
Red-yellow	65	OHY65J6TE00S	1SCA022688R0140	1	0.12
Grey	65	OHG65J6TE00S	1SCA109014R1001	1	0.12
For shaft diameter 12 mm, IP65, Nema type 1, 3R, 12					
Plastic handles, indication I-O/ON-OFF					
Black	145	OHB145J12E00S	1SCA022679R9700	1	0.17

- Door interlocking in ON-position means that the door can not be opened, when the handle is in ON-position. This can be defeated in IP65 types to allow authorized personnel access for inspection.

Ordering information
Accessories

OPY_
S00657A

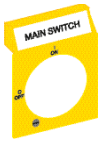

OPB3I, OPY3
S01433A



OPX3
S01434A



OPB3 + OPX3 + OH_
S01435A



Legend plates

Legend plates for selector type handles

Colour	Type	Order number	Units/ type [pcs]	Weight/ unit [kg]
Plain plates for OH 1_ and OH 3_handles.				
Black	OPBS1	1SCA111519R1001	1	0.01
Yellow	OPYS1	1SCA111528R1001	1	0.01
Silver	OPSS1	1SCA111523R1001	1	0.01
Grey	OPGS1	1SCA111563R1001	1	0.01
Plain plates for OH 2_ handles.				
Black	OPB2	1SCA022353R4110	1	0.01
Yellow	OPY2	1SCA022353R4200	1	0.01
Silver	OPS2	1SCA022353R4460	1	0.01
Grey	OPG2	1SCA022353R4380	1	0.01
Printed plates for OH 1_ and OH3_ handles. Text: MAIN SWITCH.				
Black	OPBS1EN1	1SCA111520R1001	1	0.01
Yellow	OPYS1EN1	1SCA111530R1001	1	0.01
Silver	OPSS1EN1	1SCA111525R1001	1	0.01
Grey	OPGS1EN1	1SCA111526R1001	1	0.01
Printed plates for OH 2_ handles. Text: MAIN SWITCH.				
Black	OPB2EN1	1SCA022400R2070	1	0.01
Yellow	OPY2EN1	1SCA022400R2740	1	0.01
Silver	OPS2EN1	1SCA022400R2230	1	0.01
Grey	OPG2EN1	1SCA022400R2310	1	0.01

Legend plates for pistol type handles

Colour	Text	Type	Order number	Units/ type [pcs]	Weight/ unit [kg]
Holder					
Black		OPB3	1SCA022679R3410	1	0.01
Yellow		OPY3	1SCA022695R0450	1	0.01
Lettering plate suitable for holder					
Silver	Blanco	OPX3	1SCA022679R3500	1	0.01
Silver	Pääkytkin	OPX3FI1	1SCA022695R0530	1	0.01
Silver	Main Switch	OPX3EN1	1SCA022695R0610	1	0.01
Silver	Hauptschalter	OPX3DE1	1SCA022695R0700	1	0.01
Silver	Huvudbrytare	OPX3SE1	1SCA022695R0880	1	0.01
Silver	Customer`s own text	OPX3/TEXT	1SCA022696R6370	1	0.01

Ordering information
Accessories

ST
S00681A



Handle support bracket for OETL3150

For direct mounting the handles on the switch mechanism. The shaft delivered with the switch can be used.

Suitable for switches	Type	Order number	Units/ type [pcs]	Weight/ unit [kg]
OETL3150	OETLZX71	1SCA022068R2700	1	0.40

Labelling accessories

Suitable for OT63F, OT80F, OT100F and OT125F.

Description	Type	Order number	Units/ type [pcs]	Weight/ unit [kg]
Label carrier, snap-on fixing	ST	1SCA022407R8210	10	0.01
Description label, in a sheet 250 labels	ST-E	1SCA022407R8300	1	0.01

Ordering information
Accessories

OXS6X_
S01026A



OX6X_
S04118



OXP6X_
S00050A



Shafts

The type and ordering numbers are for one piece

Shaft length [mm]	H [mm]	Suitable for switches	Type	Order number	Delivery batch [pcs]	Weight/ unit [kg]
For selector type handles, shaft diameter 6 mm						
85	See	OT16...125F, OTDC16...32F	OXS6X85	1SCA101647R1001	10	0.02
105	dimension	OT16...125F, OTDC16...32F	OXS6X105	1SCA108043R1001	10	0.02
120	drawings	OT16...125F, OTDC16...32F	OXS6X120	1SCA101654R1001	10	0.03
130		OT16...125F, OTDC16...32F	OXS6X130	1SCA101655R1001	10	0.03
160		OT16...125F, OTDC16...32F	OXS6X160	1SCA101656R1001	10	0.04
180		OT16...125F	OXS6X180	1SCA101659R1001	10	0.04
250		OT16...125F	OXS6X250	1SCA101660R1001	10	0.05
330		OT16...125F	OXS6X330	1SCA101661R1001	10	0.05
For round padlockable type handles, shaft diameter 6 mm						
60	See	OT16...125F	OX6X60	1SCA111459R1001	10	0.02
85	dimension	OT16...125F	OX6X85	1SCA111274R1001	10	0.02
105	drawings	OT16...125F	OX6X105	1SCA111930R1001	10	0.02
115		OT16...125F	OX6X115	1SCA111931R1001	10	0.03
130		OT16...125F	OX6X130	1SCA111460R1001	10	0.03
155		OT16...125F	OX6X155	1SCA111275R1001	10	0.04
200		OT16...125F	OX6X200	1SCA111932R1001	10	0.04
300		OT16...125F	OX6X300	1SCA111933R1001	10	0.05
For pistol type handles, shaft diameter 6 mm.						
150	See	OT16...125F	OXP6X150	1SCA022295R5600	10	0.05
170	dimension	OT16...125F	OXP6X170	1SCA108224R1001	10	0.05
265	drawings	OT16...125F	OXP6X265	1SCA108225R1001	10	0.08
400		OT16...125F	OXP6X400	1SCA108226R1001	10	0.12
Shaft diameter 6 mm [1)]						
130	109...174	OT160EV...250	OXP6X130	1SCA022057R0570	10	0.04
150	129...194	OT160EV...250	OXP6X150	1SCA022295R5600	10	0.05
161	140...205	OT160EV...250	OXP6X161	1SCA022067R1760	10	0.05
210	189...254	OT160EV...250	OXP6X210	1SCA022295R6080	10	0.06
290	269...334	OT160EV...250	OXP6X290	1SCA022042R6370	10	0.08

[1)] Longer shafts on request

Ordering information
Accessories

OXP12X_
S00047A



Shafts

The type and ordering numbers are for one piece

Shaft length [mm]	H [mm]	Suitable for switches	Type	Order number	Delivery batch [pcs]	Weight/ unit [kg]
Shaft diameter 12 mm						
166	146...226	OT315...400	OXP12X166	1SCA022325R7100	1	0.20
185	165...245	OT315...400	OXP12X185	1SCA022325R6710	1	0.20
250	230...310	OT315...400	OXP12X250	1SCA022325R6980	1	0.28
280	260...340	OT315...400	OXP12X280	1SCA022137R5140	1	0.30
325	305...385	OT315...400	OXP12X325	1SCA022042R5810	1	0.36
395	375...455	OT315...400	OXP12X395	1SCA022042R5990	1	0.43
465	445...525	OT315...400	OXP12X465	1SCA022042R6020	1	0.51
535	515...595	OT315...400	OXP12X535	1SCA022042R6110	1	0.59
250	230...345	OT630...800	OXP12X250	1SCA022325R6980	1	0.28
280	260...375	OT630...800	OXP12X280	1SCA022137R5140	1	0.30
325	305...420	OT630...800	OXP12X325	1SCA022042R5810	1	0.36
395	375...490	OT630...800	OXP12X395	1SCA022042R5990	1	0.43
465	445...560	OT630...800	OXP12X465	1SCA022042R6020	1	0.51
535	515...630	OT630...800	OXP12X535	1SCA022042R6110	1	0.59
250	221...350	OT1000...2500	OXP12X250	1SCA022325R6980	1	0.28
280	251...380	OT1000...2500[1)]	OXP12X280	1SCA022137R5140	1	0.30
325	296...425	OT1000...2500[1)]	OXP12X325	1SCA022042R5810	1	0.36
395	366...495	OT1000...2500[1)]	OXP12X395	1SCA022042R5990	1	0.43
465	436...565	OT1000...2500[1)]	OXP12X465	1SCA022042R6020	1	0.51
535	506...635	OT1000...2500[1)]	OXP12X535	1SCA022042R6110	1	0.59
325	340...535	OETL3150	OXP12X325	1SCA022042R5810	1	0.36
395	410...605	OETL3150	OXP12X395	1SCA022042R5990	1	0.43
465	480...675	OETL3150	OXP12X465	1SCA022042R6020	1	0.51
535	550...745	OETL3150	OXP12X535	1SCA022042R6110	1	0.59

[1)] Wide versions OT1000-2500W_: with shafts over 280 mm, shaft tube OXT20X210X must be used, see page 53

Ordering information
Accessories

OXP_x_-45
S00669A



Shafts

Twisted shafts for pistol type handles, the shaft position is rotated 45 degrees.
The type and the ordering numbers are for one piece.

Shaft length [mm]	H [mm]	Suitable for switches	Type	Order number	Delivery batch [pcs]	Weight/ unit [kg]
For pistol type handles, shaft diameter 6 mm						
150	See	OT16...125F	OXP6X150-45	1SCA022294R4400	10	0.05
170	dimension	OT16...125F	OXP6X170-45	1SCA108227R1001	10	0.05
265	drawings	OT16...125F	OXP6X265-45	1SCA108228R1001	10	0.08
400		OT16...125F	OXP6X400-45	1SCA108229R1001	10	0.12
130	109...174	OT160EV...250	OXP6X130-45	1SCA022355R9110	10	0.04
150	129...194	OT160EV...250	OXP6X150-45	1SCA022294R4400	10	0.05
210	189...254	OT160EV...250	OXP6X210-45	1SCA022294R4230	10	0.06
290	269...334	OT160EV...250	OXP6X290-45	1SCA022304R4290	10	0.08
Shaft diameter 12 mm						
250	230...310	OT315...400	OXP12X250-45	1SCA022293R9400	1	0.28
280	260...340	OT315...400	OXP12X280-45	1SCA022382R0800	1	0.30
325	305...385	OT315...400	OXP12X325-45	1SCA022304R4450	1	0.36
395	445...525	OT315...400	OXP12X395-45	1SCA022749R0640	1	0.43
465	439...519	OT315...400	OXP12X465-45	1SCA022423R1770	1	0.51
535	515...595	OT315...400	OXP12X535-45	1SCA022723R2940	1	0.59
250	226...355	OT1000...2500	OXP12X250-45	1SCA022293R9400	1	0.28
280	256...385	OT1000...2500	OXP12X280-45	1SCA022382R0800	1	0.30
325	301...430	OT1000...2500	OXP12X325-45	1SCA022304R4450	1	0.36
395	371...500	OT1000...2500	OXP12X395-45	1SCA022749R0640	1	0.43
465	441...570	OT1000...2500	OXP12X465-45	1SCA022423R1770	1	0.51
535	511...640	OT1000...2500	OXP12X535-45	1SCA022723R2940	1	0.59
325	340...535	OETL3150	OXP12X325-45	1SCA022304R4450	1	0.36
395	410...605	OETL3150	OXP12X395-45	1SCA022749R0640	1	0.43
465	480...675	OETL3150	OXP12X465-45	1SCA022423R1770	1	0.51
535	550...745	OETL3150	OXP12X535-45	1SCA022723R2940	1	0.59

Ordering information
Accessories

Shaft accessories

The type and the ordering numbers are for one piece.

OHZX10
S01432A



Shaft alignment ring

Improves the handle operation if a handle and a shaft have been poorly aligned.

OZG71



Colour	Type	Order number	Delivery batch [pcs]	Weight/ unit [kg]
For pistol type handles OH_65...275J6...12				
Black	OHZX10	1SCA022661R3610	10	0.23
For selector type handles OH_1...3				
Black	OHZX11	1SCA022708R3170	10	0.23
For round padlockable handle OZ371P_				
Black	OZG71	1SCA111686R1001	10	0.05

OHZX14
S02194A



Extension ring for pistol type handles

Improves the handle operation if a handle and a shaft have been poorly aligned.

OETLZX58
S00074A

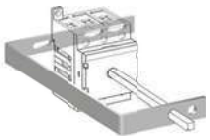

Colour	Suitable for handle	Type	Order number	Delivery batch [pcs]	Weight/ unit [kg]
Black	OHB_	OHZX14	1SCA022851R6590	1	0.06

Shaft support for long shafts

OXT20X210X
S02211A



Suitable for switches	Type	Order number	Delivery batch [pcs]	Weight/ unit [kg]
Shaft support				
OT16...125	OETLZX58	1SCA022068R8220	1	0.10
Shaft tube				
For switch-disconnectors with wide phase distance (140 mm or 185 mm). Supporting 12 mm shafts longer than 280 mm.				
OT1000…2500	OXT20X210X	1SCA103684R1001	1	1.50

Shaft extension socket

For extending the shaft of combination attachment.

OETLZX95
OESAZX167
S00080A

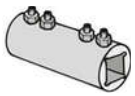

Shaft diameter [mm]	Type	Order number	Delivery batch [pcs]	Weight/ unit [kg]
6	OESAZX167	1SCA022190R1560	1	0.03
12	OETLZX95	1SCA022083R5620	1	0.04
Adapter for extension socket				
The adapter can be placed inside the extension socket OETLZX95.				
6	OETLZK19	1SCA022093R1850	1	0.02

OETLZK19
S00670C

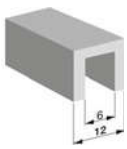

Ordering information
Accessories

OA1G_

OA3G01

S00261A



OA2G11

S01025A



Auxiliary contacts - mounted on both sides of the switch.

S00266A



1NC

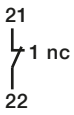

1NO

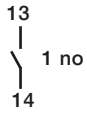

Auxiliary contact blocks, IP20

Contact numbering according to EN 50013.
The type and and the ordering numbers are for one piece.

Auxiliary contact blocks for OT 16...125

Snap-on mounting to the side of the switch.
I_{th} = 16A, cable cross section max. 2 x 2.5 mm^2. Early-break type OA1G10.

Suitable for switches	Function	Type	Order number	Delivery batch[4] [pcs]	Weight/ unit [kg]
Mountable on left side, max. 2 pcs					
OT16...125F_, FT_	1NC	OA1G01	1SCA022353R4890	10	0.03
OT16...125F_, FT_	1NC	OA1G01AU[1]	1SCA022436R7830	10	0.03
Mountable on the right side, max. 2 pcs					
OT16...125F_, FT_	1NO	OA1G10	1SCA022353R4970	10	0.03
OT16...125F_, FT_	1NO	OA1G10AU[1]	1SCA022436R7910	10	0.03
Mountable on both sides					
OT16...40: max. 2NO+2NC, OT63...125: max. 4NO+4NC[3]					
OT16...125F_	1NO+1NC	OA2G11[2]	1SCA022379R8100	10	0.03

[1] Types _AU are gold plated for extremely difficult circumstances and low voltages.
[2] Not mountable on the same side as the fourth pole.
[3] Contact numbering: (83) (43) (53) 13 21 (61) (31) (71)
(84) (44) (54) 14 22 (62) (32) (72)
[4] Auxiliary contacts OA1G_ are available in larger packing as well. A bulk package includes 50 switches.
Type number: add a suffix: /B, e.g. OA1G01/B.
- Early break type auxiliary contacts means that in the switches, the NO aux.contacts break before the main contacts open.
- Performance data of auxiliary contacts, see page 57.
- The contact timing: see the charts on page 106

Ordering information
Accessories

OA1G_
OA3G01
S00261A



1NC

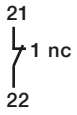

1NO

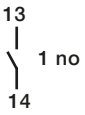

OZXK_
S01308A



1NO+1NC

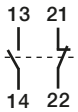

2NO+2NC

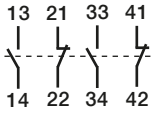

4NO+4NC

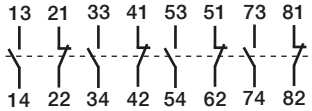

2NO

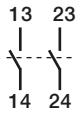

4NO

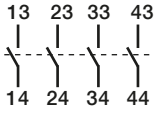

8NO

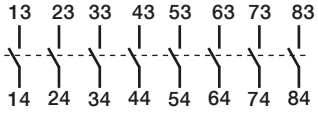

Auxiliary contact blocks, IP20

Contact numbering according to EN 50013.
The type and and the ordering numbers are for one piece.

Auxiliary contact blocks for OT160EV...2500

Suitable for switches	Function	Type	Order number	Delivery batch[2] [pcs]	Weight/ unit [kg]
OT160EV...2500	1NO	OA1G10	1SCA022353R4970	10	0.03
OT160EV...2500	1NO	OA1G10AU[1]	1SCA022436R7910	10	0.03
OT160EV...2500	1NC	OA3G01	1SCA022456R7410	10	0.03
OT160EV...2500	1NC	OA3G01AU[1]	1SCA022819R5260	10	0.03

Mounting under the mechanism cover

The "test" contacts operate in ON- and OFF-positions as well as when the handle is turned to TEST-position = 45 degrees over the OFF-position. The "test indication" contacts operate only when the handle is turned to TEST-position. See the function table below. The OA1G10 (N.O.) or OA3G01 (N.C.) auxiliary contact blocks can be used as standard auxiliary contacts, "test" or "test indication" contacts. The desired functions are achieved when an auxiliary contact block is installed in a specific place shown in the mounting instruction. In order to activate the "test" and "test indication" features a handle with test function is required. See the optional handles, from page 44.

OT160EV-250: Max. 4 test contacts or 2 test contacts + 2 test indication contacts.

OT315-800: Max. 4 test contacts + 4 test indication contacts.

OT1000-2500: Max 4 test indication contacts + 6 test contacts + 2 early operation test contacts.

The test contacts can be used as standard auxiliary contacts as well.

Function table of OT160EV...2500 auxiliary contacts

Handle position	Main contacts	Aux./Test contacts N.O.	Test indication contact N.O.
Test	open	closed	closed
0	open	open	open
I	closed	closed	open

Mounting on the left side of the switch

Max. 8 auxiliary contact blocks with the OEA28 module.

Auxiliary contact blocks for OETL3150

Suitable for switches	Function	Type	Order number	Delivery batch [pcs]	Weight/ unit [kg]
Mounting on the mechanism cover					
I_{th} = 10 A. Cable cross section 0.5 mm²...2 x 2.5 mm². Insulation voltage U 690 V. Early break type.					
OETL3150	1NO+1NC	OZXK1	1SCA022131R8690	1	0.12
OETL3150	2NO+2NC	OZXK2	1SCA022131R8850	1	0.12
OETL3150	4NO+4NC	OZXK3[3]	1SCA022131R9070	1	0.18
OETL3150	2NO	OZXK4	1SCA022131R9230	1	0.09
OETL3150	4NO	OZXK5	1SCA022131R9400	1	0.12
OETL3150	8NO	OZXK6[4]	1SCA022131R9660	1	0.18

[1] Types _AU are gold plated for extremely difficult circumstances and low voltages.
[2] Auxiliary contacts OA1G_ are available in larger packing as well. A bulk package includes 50 switches. Type number: add a suffix: /B, e.g. OA1G01/B.
[3] 8 NO + 8 NC auxiliary contacts = 2 x OZXK 3
[4] 16 NO auxiliary contacts = 2 x OZXK 6
- Early break type auxiliary contacts means that in the switches, the NO aux.contacts break before the main contacts open.
- Performance data of auxiliary contacts, see page 57.
- The contact timing: see the charts on page 106

Ordering information
Accessories

OA1G_
OA3G01
S00261A



Auxiliary contact blocks, IP20

Contact numbering according to EN 50013. The type and and the ordering numbers are for one piece.

Auxiliary contacts for OTM160...2500

Units/type = 1 piece. Types _AU have gold plated contacts for harsh environments and low operating voltages.

1NC

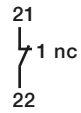

1NO

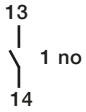

Suitable for switches	Function	Protection degree	Type	Order number	Delivery batch [pcs]	Weight/ unit [kg]
OTM	1NO	IP20	OA1G10	1SCA022353R4970	10	0.03
OTM	1NC	IP20	OA3G01	1SCA022456R7410	10	0.03
OTM	1NO	IP20	OA1G10AU	1SCA022436R7910	10	0.03
OTM	1NC	IP20	OA3G01AU	1SCA022819R5260	10	0.03

Mounting on the side

Mounting on the right side of the OTM motorized switch-disconnector:
Maximum 2+2 auxiliary contact blocks (N.O. or N.C.), snap-on mounting.

Mounting under the mechanism cover:

The “test” contacts operate in ON- and OFF-positions as well as when the handle is turned to TEST-position = 45 degrees over the OFF-position. The “test indication” contacts operate only when the handle is turned to TEST-position. See the function table below. The OA1G10 (N.O.) or OA3G01 (N.C.) auxiliary contact blocks can be used as standard auxiliary contacts, “test” or “test indication” contacts. The desired functions are achieved when an auxiliary contact block is installed in a specific place shown in the mounting instruction.

Function table of OTM auxiliary contacts

Handle position	Main contacts	Aux./Test contacts N.O.	Test indication contacts N.O.
Test	open	closed	closed
0	open	open	open
I	closed	closed	open

Maximum number of contact blocks, “Aux./test” contacts and “test indication” contacts under the mechanism cover of OTM

	OTM 160...250	OTM315...400	OTM630...800	OTM 1000...2500
Maximum number of contact blocks	2	4	4	6
Aux./Test contacts	2	-	-	2[1)]
Test indication contacts	-	4	4	4

[1)] Early operation test contact
- Early break type auxiliary contacts means that in the switches, the NO aux.contacts break before the main contacts open.
- Performance data of auxiliary contacts, see next page.
- The contact timing: see the charts on page 106.

Ordering information
Accessories

OEA28
S03009A



Mounting accessories for auxiliary contacts

Suitable for switches	Type	Order number	Units/ type [pcs]	Weight/ unit [kg]
Module for auxiliary contacts with OT160EV...2500				
Screw mounting to the left side of the switch				
OT160EV...2500	OEA28	1SCA022714R8810	1	0.04

Performance data of auxiliary contacts according to IEC 60947-5-1

For OA1G_, OA2G_, OA3G_							For OZXK_			
	AC15		DC12		DC13			AC12		DC12
U_e/[V]	I_e/[A]	U_e/[V]	I_e/[A]	P/[W]	I_e/[A]	P/[W]	U_e/[V]	I_e/[A]	U_e/[V]	I_e/[A]
230	6	24	10	240	2	50	120	8	125	1.1
400	4	72	4	290	0.8	60	240	6	250	0.55
415	4	125	2	250	0.55	70	400	4	440	0.31
690	2	250	0.55	140	0.27	70	415	4	500	0.27
		440	0.1	44			480	3	600	0.2
							500	3		
							690	2		

For OA1G_, OA2G_, OA3G_	
U_i/[V]	690
U_{imp}/[kV]	4
Pollution degree	3
I_{th}/[A]	16
Cable size	1...2 x 0.75...2.5 mm²
Maximum fuse	16A / gG
NEMA	A600, R300, wire size: 18 - 14 AWG, 1(2)

Ordering information
Accessories

OTP_40_
S00262A



OTP_80_
S00263A



OTP_125_
S01342A



OTZ_
S07222



Fourth poles

Mountable on the side of the switch. The type and the ordering numbers are for one piece.

Suitable for switches	Type	Order number	Delivery batch [pcs]	Weight/ unit [kg]
Simultaneous function with the main contacts				
OT16...40F3	OTPS40FPN1*)	1SCA105001R1001	10	0.03
OT16...40F3	OTPS40FPN2*)	1SCA105000R1001	10	0.06
OT63...80F3	OTPS80FP	1SCA105461R1001	10	0.14
OT100...125F3	OTPS125FP	1SCA105099R1001	10	0.03
OT16...40FT3	OTPS40FDN1*)	1SCA104999R1001	10	0.06
OT16...40FT3	OTPS40FDN2*)	1SCA104998R1001	10	0.14
OT63...80FT3	OTPS80FD	1SCA105458R1001	5	0.30
OT100...125FT3	OTPS125FD	1SCA105096R1001	1	0.30
OT160EV...250	OTZ250E	1SCA022735R9420	10	0.35
OT315...400	OTZ400E	1SCA022749R1960	10	0.59
OT630...800	OTZ800E	1SCA022807R5100	1	1.70
OT1000...1250	OTZ1250E	1SCA103765R1001	1	4.30
OT1600	OTZ1600E	1SCA100431R1001	1	4.54
OT2000...2500	OTZ2500E	1SCA107931R1001	1	4.30
Late-break and early-make				
OT16...40F3	OTPL40FP	1SCA105717R1001	10	0.03
OT63...80F3	OTPL80FP	1SCA105452R1001	10	0.06
OT100...125F3	OTPL125FP	1SCA105090R1001	10	0.14
OT16...40FT3	OTPL40FD	1SCA105716R1001	10	0.03
OT63...80FT3	OTPL80FD	1SCA105451R1001	10	0.06
OT100...125FT3	OTPL125FD	1SCA105088R1001	10	0.14

*) N1=On the left side of the switch
N2=On the right side of the switch

Ordering information
Accessories

OTP_40_
S00262A



OTP_80_
S00263A



OTP_125_
S01342A



OXN_
S01918A



OESAZX_
S01994A



Neutral and earth terminals

Mountable on the side of the switch. The type and the ordering numbers are for one piece.

Suitable for switches	Type	Order number	Delivery batch [pcs]	Weight/ unit [kg]
Fixed neutral				
OT16...40F3	OTPN40FP	1SCA104997R1001	10	0.03
OT63...80F3	OTPN80FP	1SCA105457R1001	10	0.06
OT100...125F3	OTPN125FP	1SCA105094R1001	10	0.14
OT16...40FT3	OTPN40FD	1SCA105718R1001	10	0.03
OT63...80FT3	OTPN80FD	1SCA105456R1001	10	0.06
OT100...125FT3	OTPN125FD	1SCA105092R1001	10	0.14
Detachable neutral				
OT16...40F3	OTPD40FP	1SCA104994R1001	10	0.03
OT63...80F3	OTPD80FP	1SCA105445R1001	10	0.06
OT100...125F3	OTPD125FP	1SCA105083R1001	10	0.14
OT63...80FT3	OTPD80FD	1SCA105444R1001	1	0.06
Protective earth				
OT16...40F3	OTPE40FP	1SCA104995R1001	10	0.03
OT63...80F3	OTPE80FP	1SCA105448R1001	10	0.06
OT100...125F	OTPE125FP	1SCA105128R1001	10	0.14
OT16...40FT3	OTPE40FD	1SCA109884R1001	10	0.03
OT63...80FT3	OTPE80FD	1SCA105446R1001	10	0.06
OT100...125FT3	OTPE125FD	1SCA105698R1001	10	0.14

Neutral links

Suitable for switches	I_{th} [A]	Type	Order number	Units/ type [pcs]	Weight/ unit [kg]
Detachable, mountable separately to the base plate					
OT160EV...250/OTM160...250	250	OXN250	1SCA022752R9950	1	0.26
OT/OTM315...400	400	OXN400	1SCA022770R3060	1	0.70
OT/OTM630...800	800	OXN800T	1SCA022829R0840	1	0.96
OT/OTM1000...1250	1250	OXN1250T	1SCA104162R1001	1	2.20
Mountable separately to the base plate					
	200	OESAZX162	1SCA022193R0400	1	0.12
	315	OESAZX164	1SCA022202R9520	1	0.10
	400	OESAZX165	1SCA022202R9790	1	0.12
	1000	OESAZX160	1SCA022186R3960	1	1.00

Ordering information
Accessories

OTS_T3
S00265A



OTS125T3L
S07090



OTS_T1
S00462A



Terminal shrouds

Snap-on mounting, transparent

The type and the ordering numbers are for one piece.

Suitable for switches	Type	Order number	Delivery batch [pcs]	Weight/ unit [kg]
For 3-pole switches				
OT16...40F3, -FT3	OTS40T3	1SCA105317R1001	10	0.01
OT63...80F3, -FT3	OTS63T3	1SCA022353R6750	10	0.01
OT100...125F3, FT3	OTS125T3	1SCA022379R9680	10	0.01
For 3-pole switches with terminal clamps OZXL1 or OZXT1				
OT100...125F3	OTS125T3P	1SCA022491R9890	10	0.01
For 1 to 4-pole switches, shroud for single pole and for fourth pole				
OTP_40F_	OTS40T1	1SCA105314R1001	10	0.01
OTP_80F_	OTS63T1	1SCA022353R6910	10	0.01
OTP_125F_	OTS125T1	1SCA022379R9760	10	0.01
For 1 to 4-pole switches with terminal clamps OZXL1 or OZXT1, shroud for single pole and for fourth pole				
OT100...125F_	OTS125T1P	1SCA022491R9970	10	0.01

Ordering information
Accessories

OTS_L_
S01638A



OTS_S_
S01637A



OZXB2K
S00215A S00216A

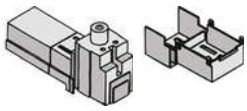

OZXB3K
S00217A S00220A
S00218A S00219A

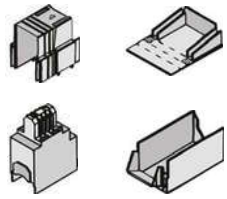

OZXB4K
S00221A S00222A

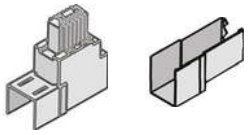

OZXB5K
S00233A S00224A

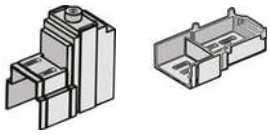

Terminal shrouds

Snap-on mounting, grey plastic

Pack of single pole shrouds, IP3X. Transparent shrouds available on request.

Suitable for switches	Description	Type	Order number	Units/ type [pcs]	Weight/ unit [kg]
For 3-pole switches					
OT160EV…250/OTM160…250	Long type	OTS250G1L/3	1SCA022731R8150	3	0.09
OT160EV…250/OTM160…250	Short type	OTS250G1S/3	1SCA022731R8310	3	0.06
OT/OTM315…400	Long type	OTS400G1L/3	1SCA022736R8840	3	0.15
OT/OTM315…400	Short type	OTS400G1S/3	1SCA022736R9060	3	0.09
OT/OTM630…800	Long type	OTS800G1L/3	1SCA022776R7890	3	0.32
OT/OTM630…800	Short type	OTS800G1S/3	1SCA022776R8190	3	0.17
OT/OTM1000…1600	Long type	OTS1600G1L/3	1SCA022871R9510	3	0.60
OT/OTM1000…1600	Short type	OTS1600G1S/3	1SCA022871R9600	3	0.40
OT/OTM2000…2500	Long type	OTS2500G1L/3	1SCA107261R1001	3	1.00
OT/OTM2000…2500	Short type	OTS2500G1S/3	1SCA107260R1001	3	0.50
For 4-pole switches					
OT160EV…250/OTM160…250	Long type	OTS250G1L/4	1SCA022731R8230	4	0.12
OT160EV…250/OTM160…250	Short type	OTS250G1S/4	1SCA022731R8400	4	0.08
OT/OTM315…400	Long type	OTS400G1L/4	1SCA022736R9490	4	0.20
OT/OTM315…400	Short type	OTS400G1S/4	1SCA022736R9650	4	0.12
OT/OTM630…800	Long type	OTS800G1L/4	1SCA022776R7970	4	0.42
OT/OTM630…800	Short type	OTS800G1S/4	1SCA022776R8270	4	0.26
OT/OTM1000…1600	Long type	OTS1600G1L/4	1SCA022871R9780	4	0.80
OT/OTM1000…1600	Short type	OTS1600G1S/4	1SCA022871R9860	4	0.5
OT/OTM2000…2500	Long type	OTS2500G1L/4	1SCA107262R1001	4	1.30
OT/OTM2000…2500	Short type	OTS2500G1S/4	1SCA107271R1001	4	0.70

Terminal shrouds for terminal clamps

Snap-on mounting, transparent plastic, IP2X.

Suitable for terminal clamps	Type	Order number	Units/ type [pcs]	Weight/ unit [kg]
OZXB2, 2L	OZXB2K	1SCA022264R0010	3	0.05
OZXB3, 4	OZXB3K	1SCA022264R0440	3	0.20
OZXB5, 6	OZXB4K	1SCA022199R2850	3	0.24
OZXB7, 7L	OZXB5K	1SCA022283R8040	3	0.13

Ordering information
Accessories

OTB_
KE00052



Phase separators

Grey plastic plate for maintaining 1" clearance between the phases without terminal shrouds. Snap-on mounting.

Suitable for switches	Type	Order number	Units/ type [pcs]	Weight/ type [kg]
OT600U, OT630...800E, 3- and 4-pole	OTB800/6	1SCA022821R7760	6	0.35
OT1000…2500, 3- and 4-pole	OTB1600/6	1SCA100768R1001	6	0.50

PB_

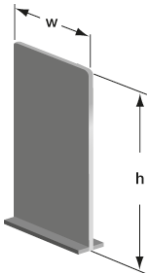

Phase barriers

The phase barriers designed for ABB Tmax T4-T5 MCCB's can also be used for OT200...800 switch disconnectors. 3-pole switch disconnectors need 4 barriers and 4-pole switch disconnectors need 6 barriers for full protection.

Suitable for switches	Number of poles	Height h [mm]	Cutting width w of the phase barrier [mm]	Type	Order number	Units/ type [pcs]	Weight/ type [kg]
OT160EV…250	3	100	55	PB100 low	1SDA054970R1	4	
OT160EV…250	3	200	55	PB200 high	1SDA054972R1	4	
OT160EV…250	4	100	55	PB100 low	1SDA054971R1	6	
OT160EV…250	4	200	55	PB200 high	1SDA054973R1	6	
OT315…400	3	100	67	PB100 low	1SDA054970R1	4	
OT315…400	3	200	67	PB200 high	1SDA054972R1	4	
OT315…400	4	100	67	PB100 low	1SDA054971R1	6	
OT315…400	4	200	67	PB200 high	1SDA054973R1	6	
OT600…800	3	100	90	PB100 low	1SDA054970R1	4	
OT600…800	3	200	90	PB200 high	1SDA054972R1	4	
OT600…800	4	100	90	PB100 low	1SDA054971R1	6	
OT600…800	4	200	90	PB200 high	1SDA054973R1	6	

OTVS_
S07017



Handle and spare fuse storage clip for OTM

Handle and two spare fuses (for motor operator) can be stored on the OTVS_. OTVS_ can be installed on the left side of the motorized switch-disconnector OTM. Snap-on mounting, no tools required. On OTM 1000...2500E_, the size of the handle prevents the installation onto the switch frame. However, the handle clip can be separately installed on the panel frame and the fuse holder clip onto the switch frame.

Suitable for switches	Type	Order number	Units/ type [pcs]	Weight/ type [kg]
OTM160...250E	OTVS1	1SCA111413R1001	1	0.02
OTM315...800E	OTVS2	1SCA111414R1001	1	0.04

Ordering information
Accessories

OZXT1
S00738A



Terminal clamps

Suitable for switches	Cable cross section [mm²]	Type	Order number	Units/ type [pcs]	Weight/ unit [kg]
Terminal clamp sets for Al- and Cu-cables Insulated versions					
OT63...125	16...50 Al, 2.5...50 Cu	OZXT1**)	1SCA022469R6310	3	0.05
OT100...125	16...120 Al/Cu	OZXT2	1SCA022620R7200	3	0.21
OT100...125	2x(16...50) Al/Cu	OZXT3	1SCA022639R0720	3	0.21

OZXT2...3
S01349A



OZXL1
S01361A



OZXB1L
S00177A



OZXB2
S00179A



OZXB2L, 7L
S00182A



OZXB8, 9
S01806A



OZXB3, 5
S00186A



OZXB4, 6
S00188A



Suitable for switches	Cable cross section [mm²]	Suitable shroud	Type	Order number	Units/ type [pcs]	Delivery batch [pcs]	Weight/ unit [kg]
Terminal clamp sets for Al- and Cu-cables							
OT100...125F	10...70Al/Cu		OZXL1	1SCA022439R6770	3	1	0.14
OT100...125F	10...70Al/Cu		OZXL1/1	1SCA022469R6220	1	50	0.05
OZXB type Al/Cu connectors made of stainless steel							
OT/OTM160*)...250	10...70	OTS250_L	OZXB1L	1SCA022169R2030	3	1	0.15
OT/OTM160*)...250	10...70	OTS250_L	OZXB1L/1	1SCA022194R0030	1	50	0.05
OT/OTM160*)...250	25...120	OZXB2K	OZXB2	1SCA022119R7610	3	1	0.34
OT/OTM160*)...250	25...120	OZXB2K	OZXB2/1	1SCA022194R0200	1	50	0.12
OT/OTM160*)...250	25...120	OZXB2K	OZXB2L	1SCA022158R7750	3	1	0.43
OT/OTM160*)...250	25...120	OZXB2K	OZXB2L/1	1SCA022194R0460	1	50	0.15
OT/OTM160*)...250	95...185	OTS250_L	OZXB8	1SCA022744R1510	3	1	0.50
OT/OTM160*)...250	95...185	OTS250_L	OZXB8/1	1SCA022744R1600	1	20	0.15
OT/OTM160*)...250	95...240	OTS250_L	OZXB9	1SCA022750R3210	3	1	0.50
OT/OTM160*)...250	95...240	OTS250_L	OZXB9/1	1SCA022750R3300	1	20	0.14
OT/OTM315...400	25...120	OZXB2K	OZXB2L	1SCA022158R7750	3	1	0.43
OT/OTM315...400	25...120	OZXB2K	OZXB2L/1	1SCA022194R0460	1	50	0.15
OT/OTM315...400	95...185	OZXB3K	OZXB3	1SCA022136R8100	3	1	1.28
OT/OTM315...400	95...185	OZXB3K	OZXB3/1	1SCA022194R0620	1	20	0.13
OT/OTM315...400	2x(95...185)	OZXB3K	OZXB4	1SCA022137R4760	3	1	1.71
OT/OTM315...400	2x(95...185)	OZXB3K	OZXB4/1	1SCA022194R0890	1	20	0.60
OT/OTM315...400	120...240	OZXB5K	OZXB7	1SCA022185R0040	3	1	1.00
OT/OTM315...400	120...240	OZXB5K	OZXB7/1	1SCA022194R1430	1	20	0.34
OT/OTM315...400	120...240	OZXB5K	OZXB7L	1SCA022185R7130	3	1	1.20
OT/OTM315...400	120...240	OZXB5K	OZXB7L/1	1SCA022194R1600	1	20	0.39
OT/OTM315...400	95...185	OTS400_L	OZXB8	1SCA022744R1510	3	1	0.50
OT/OTM315...400	95...185	OTS400_L	OZXB8/1	1SCA022744R1600	1	20	0.15
OT/OTM315...400	95...240	OTS400_L	OZXB9	1SCA022750R3210	3	1	0.50
OT/OTM315...400	95...240	OTS400_L	OZXB9/1	1SCA022750R3300	1	20	0.14
OT/OTM630...800	120...300	OZXB4K	OZXB5	1SCA022137R2470	3	1	2.22
OT/OTM630...800	120...300	OZXB4K	OZXB5/1	1SCA022194R1010	1	20	0.80
OT/OTM630...800	2x(120...300)	OZXB4K	OZXB6	1SCA022137R4920	3	1	3.03
OT/OTM630...800	2x(120...300)	OZXB4K	OZXB6/1	1SCA022194R1270	1	20	1.00

*) OT160EV_ type
**) I_n=63 A
- More information on Al/Cu terminal clamps, see the catalogue OZX1A GB.
- Included bolt sets:
  OT 160EV...250, OZXE51, M8x25, 6 pcs/package
  OT 315...400, OZXE54, M10x30, 6 pcs/package
  OT 630...800, OZXE3, M12x40, 6 pcs/package

Ordering information
Accessories

OZXB3, 5
S00186A



OZXB4, 6
S00188A



Terminal clamps

Terminal clamp sets for Al- and Cu-cables

Suitable for switches	Cable cross section [mm²]	Suitable shroud	Type	Order number	Units/ type [pcs]	Delivery batch [pcs]	Weight/ unit [kg]
OZXB type Al/Cu connectors made of stainless steel							
OT/OTM1000...1600	95…185	OTS1600_L	OZXB3	1SCA022136R8100	3	1	1.28
OT/OTM1000...1600	95…185	OTS1600_L	OZXB3/1	1SCA022194R0620	1	20	0.13
OT/OTM1000...1600	2x(95…185)	OTS1600_L	OZXB4	1SCA022137R4760	3	1	1.71
OT/OTM1000...1600	2x(95…185)	OTS1600_L	OZXB4/1	1SCA022194R0890	1	20	0.60
OT/OTM1000...1600	120…300	OTS1600_L	OZXB5	1SCA022137R2470	3	1	2.22
OT/OTM1000...1600	120…300	OTS1600_L	OZXB5/1	1SCA022194R1010	1	20	0.80
OT/OTM1000...1600	2x(120…300)	OTS1600_L	OZXB6	1SCA022137R4920	3	1	3.03
OT/OTM1000...1600	2x(120…300)	OTS1600_L	OZXB6/1	1SCA022194R1270	1	20	1.00
OT/OTM1000...1600	120…240	OTS1600_L	OZXB7L	1SCA022185R7130	3	1	1.20
OT/OTM1000...1600	120...240	OTS1600_L	OZXB7L/1	1SCA022194R1600	1	20	0.39
OT/OTM2000…2500	95…185	OTS2500_L	OZXB3	1SCA022136R8100	3	1	1.28
OT/OTM2000…2500	95…185	OTS2500_L	OZXB3/1	1SCA022194R0620	1	20	0.13
OT/OTM2000…2500	2x(95…185)	OTS2500_L	OZXB4	1SCA022137R4760	3	1	1.71
OT/OTM2000…2500	2x(95…185)	OTS2500_L	OZXB4/1	1SCA022194R0890	1	20	0.60
OT/OTM2000…2500	120…300	OTS2500_L	OZXB5	1SCA022137R2470	3	1	2.22
OT/OTM2000…2500	120…300	OTS2500_L	OZXB5/1	1SCA022194R1010	1	20	0.80
OT/OTM2000…2500	2x(120…300)	OTS2500_L	OZXB6	1SCA022137R4920	3	1	3.03
OT/OTM2000…2500	2x(120…300)	OTS2500_L	OZXB6/1	1SCA022194R1270	1	20	1.00
OT/OTM2000…2500	120…240	OTS2500_L	OZXB7L	1SCA022185R7130	3	1	1.20
OT/OTM2000…2500	120...240	OTS2500_L	OZXB7L/1	1SCA022194R1600	1	20	0.39
OETL3150	95…185	OZXB3K	OZXB3	1SCA022136R8100	3	1	1.28
OETL3150	95…185	OZXB3K	OZXB3/1	1SCA022194R0620	1	20	0.13
OETL3150	2x(95…185)	OZXB3K	OZXB4	1SCA022137R4760	3	1	1.71
OETL3150	2x(95…185)	OZXB3K	OZXB4/1	1SCA022194R0890	1	20	0.60
OETL3150	120…300	OZXB4K	OZXB5	1SCA022137R2470	3	1	2.22
OETL3150	120…300	OZXB4K	OZXB5/1	1SCA022194R1010	1	20	0.80
OETL3150	2x(120…300)	OZXB4K	OZXB6	1SCA022137R4920	3	1	3.03
OETL3150	2x(120…300)	OZXB4K	OZXB6/1	1SCA022194R1270	1	20	1.00

- More information on Al/Cu terminal clamps, see the catalogue OZX1A GB.
- Included bolt sets:
  OT1000...1250, OZXE11, M12x50, 6 pcs/package
  OT1600, OZXE14, M12x60, 6 pcs/package
  OT2000.2500, OZXE14, M12x60, 12 pcs/package
  OETL 3150, OZXE14, M12x60 mm, 12 pcs/package

Ordering information
Accessories

OZXR2X300
S03009A



OZXR240
S03012A



OZXP240
S03011A



OZXP2X240
S03010A



Terminal clamps

Terminal clamp sets for Al- and Cu-cables

Suitable for switches	Cable cross section [mm²]	Suitable shroud	Type	Order number	Units/ type [pcs]	Weight/ unit [kg]
OZXR type Al/Cu connectors made of stainless steel and copper						
OT160EV…250	25…95	OTS250_L	OZXR95	1SCA115530R1001	3	0.21
OT200…250	95…185	OTS250_L	OZXR185	1SCA115531R1001	3	0.45
OT315…400	2x(95…185)	-	OZXR2X185	1SCA115534R1001	3	0.66
OT315…400	185…300	-	OZXR300	1SCA115533R1001	3	0.87
OT630…800	2x(185…300)	-	OZXR2X300	1SCA115535R1001	3	1.59
OT315…400	95…240	OTS400_L	OZXR240	1SCA115532R1001	3	0.42
OZXP type Al/Cu connectors made of tin plated aluminium profile						
OT160EV…250	6…95	OTS250_L	OZXP95	1SCA115539R1001	3	0.03
OT315…400	35…240	-	OZXP240	1SCA115542R1001	3	0.27
OT630…800	2x(70…240)	OTS800_L	OZXP2X240	1SCA115544R1001	3	1.38

Busbar connections for OETL 3150

OETLZX115, vertical mounting
S00066A

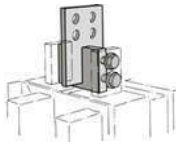

OETLZX114, vertical/back mounting
S00064A

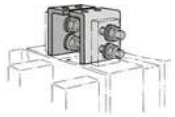

OETLZX114 Edgewise mounting
S00065A

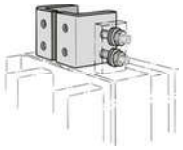

Busbar termination from different directions.

Suitable for switches	Type	Order number	Units/ type [pcs]	Weight/ unit [kg]
Vertical mounting				
3 pole	OETLZX115	1SCA022117R7770	6	21
4 pole	OETLZX115/1	1SCA022126R2110	8	28
Vertical- / back- or edgewise mounting				
3 pole	OETLZX114	1SCA022117R7510	6	14.1
4 pole	OETLZX114/1	1SCA022126R1990	8	18.8

Ordering information
Accessories

OW_6D40
S04055



OW_6D80
S01285A



OTZW8
S00061A



OESAZW2
S01246A



OETLZW9
S07221



OESAZW1
S01234A



OTZW25, OETLZW11
S00054B



OETLZW12
S00055A

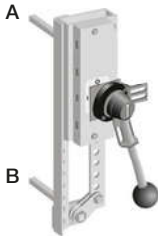

Conversion kits for front operated switch combinations

Suitable for switches	Shaft distance [mm]	Type	Order number	Units/ type [pcs]	Weight/ unit [kg]
6 and 8-pole switch mechanism					
Parallel attachment for connecting two 3- or 4-pole switches					
The switches work simultaneously. Mounting directly on the top of two switch-disconnectors, snap-on mounting. The switch size is printed on stickers for the different switch sizes. The fourth pole or auxiliary contacts can be mounted on the outer side of the combination.					
OT16...40		OWP6D40	1SCA022865R4800	1	0.03
OT63...80		OWP6D80	1SCA022865R5010	1	0.03
OT100...125		OWP6D125	1SCA022865R5100	1	0.03
Attachment levers for connecting two 3- or 4-pole switches					
Attachment levers provided with holes, enabling different shaft distances. The combination switches can be mounted either horizontally or vertically. Two 3 or 4-pole switches needed.					
OT16...40	45+(0...12)x15	OTZW8	1SCA022421R7600	1	0.17
OT63...80	60+(0...11)x15	OTZW8	1SCA022421R7600	1	0.17
OT100...125	75+(0...10)x15	OTZW8	1SCA022421R7600	1	0.17
OT160EV...250	45+(0...13)x15	OESAZW2	1SCA022078R1600	1	0.8
OT315...800	60+(0...19)x20	OETLZW9	1SCA022061R3300	1	1.1
Change-over switch mechanism					
Two switches connected with a mechanism operating into I-O-II -positions. Two 3 or 4-pole switches needed.					
Change-over kits					
The modular change-over switches can be built by adding a compact snap-on kit on the top of two switch-disconnectors. The kits do not require any additional foot print area, only the height is increased 12 mm.					
OT16...40	OXS6_, OXP6_	OWC6D40	1SCA022865R4550	1	0.03
OT63...80	OXS6_, OXP6_	OWC6D80	1SCA022865R4630	1	0.07
OT100...125	OXS6_, OXP6_	OWC6D125	1SCA104494R1001	1	0.09
Attachment levers					
OT16...125	90+(0...10)x15	OESAZW1	1SCA022064R3710	1	0.78
OT160EV...250	210+(0...18)x20	OTZW25	1SCA022778R6920	1	2.8
OT315...400	210+(0...11)x20	OETLZW11	1SCA022078R0030	1	3.0
OT630...800	210+(0...20)x20	OETLZW12	1SCA022078R0200	1	4.6

See the table of the handles and shafts included in the conversion kits on page 68.

Ordering information
Accessories

OTZW17
S01245A



Conversion kits for front operated switch combinations

Suitable for switches	Shaft distance [mm]	Type	Order number	Units/ type [pcs]	Weight/ unit [kg]
By-pass switch mechanism					
A combination of two switches in parallel with a third switch for change-over operation to by-pass, for example, a breaker for maintenance. The by-pass attachment can be used together with another combination attachment. Three 3 or 4-pole switches needed.					
OT16...125		OTZW17	1SCA022387R1620	1	0.88
Between 1 and 2: 90+(0...6)x15					
Between 1 and 3: 90+(0...10)x15					
OT160EV...250		OTZW26	1SCA022778R7060	1	3.3
Between 1 and 2: 210+(0...9)x20					
Between 1 and 3: 250+(0...9)x20					
OT315...800		OETLZW13	1SCA022078R0460	1	4.0
Between 1 and 2: 210+(0...18)x20					
Between 1 and 3: 250+(0...18)x20					

OTZW26
S00058B



OETLZW13
S00056A



Suitable for switches	Shaft distance [mm]	Type	Order number	Units/ type [pcs]	Weight/ unit [kg]
Mechanical interlock mechanism					
Prevents one switch from moving to ON-position, if the other is not in OFF-position. When mounted upside down, prevents one switch from moving to OFF-position, if the other is not in ON-position. (UPS-usage, make-before-break).					
OT16...125	100	OTZW24	1SCA022639R5610	1	0.08
OT160...250	190	OTZW10	1SCA022431R5280	1	0.40
OT315...400	250	OETLZW14	1SCA022077R3410	1	0.70
OT315...800	300	OETLZW3	1SCA022049R0380	1	0.80
OT315...2500 and OETL3150	500	OETLZW15	1SCA022081R9340	1	1.24

See the table of the handles and shafts included in the conversion kits on next page.

OTZW24, 10
S00938A



OETLZW14, 3, 15
S00053A



Ordering information
Accessories

Change-over switches
S01233A

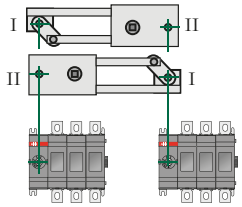

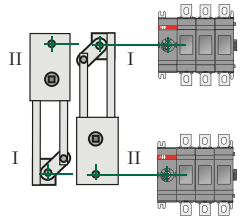

Bypass switches
S01233A

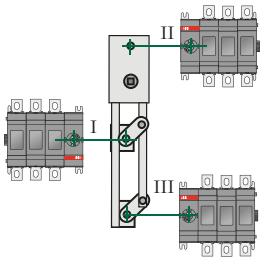

Mechanical interlock
S00372A

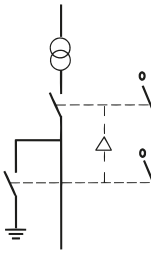

The shafts and handles for conversion kits

Conversion kit type	To be ordered separately		Included in conversion kit delivery		The standard handle / shaft of one of the combined switches can be used	
	Shaft	Handle	Shaft	Handle	Shaft	Handle
6 and 8-pole switches						
OWP6D40	x (shaft dia 6 mm)	OHBS1A_	-	-	-	-
OWP6D80	x (shaft dia 6 mm)	OHBS1A_	-	-	-	-
OWP6D125	x (shaft dia 6 mm)	OHBS1A_	-	-	-	-
OWP6D40	x (shaft dia 6 mm)	OHB45J6	-	-	-	-
OWP6D80	x (shaft dia 6 mm)	OHB45J6	-	-	-	-
OWP6D125	x (shaft dia 6 mm)	OHB45J6	-	-	-	-
OESAZW2	-	-	x (2 pcs)	OHB145J12	-	-
OETLZW9	-	-	-	-	x	x
OTZW8	x	x	-	-	-	-
Change-over switches						
OWC6D40	x (shaft dia 6 mm)	OHBS2AJE011	-	-	-	-
OWC6D80	x (shaft dia 6 mm)	OHBS2AJE011	-	-	-	-
OWC6D125	x (shaft dia 6 mm)	OHBS2AJE011	-	-	-	-
OWC6D40	x (shaft dia 6 mm)	OHB45J6E311	-	-	-	-
OWC6D80	x (shaft dia 6 mm)	OHB45J6E311	-	-	-	-
OWC6D125	x (shaft dia 6 mm)	OHB45J6E311	-	-	-	-
OESAZW1	-		x (2 pcs)	OHB80J6E011	-	-
OTZW25	-	-	x (2 pcs)	OHB95J12E011	-	-
OETLZW11	-	-	x (2 pcs)	OHB145J12E011	-	-
OETLZW12	-		x (2 pcs)	YASDA21	-	-
By-pass switches						
OTZW17	-	-	x (3 pcs)	OHB80J6E011		
OTZW26	-	-	x (3 pcs)	OHB95J12E011	-	-
OETLZW13	-	-	x (3 pcs)	YASDA 6	-	-
Mechanical interlock						
OTZW24	-	-	-	-	x	x
OTZW10	-	-	-	-	x	x
OETLZW14	-	-	-	-	x	x
OETLZW3	-	-	-	-	x	x
OETLZW15	-	-	-	-	x	x

Change-over switches

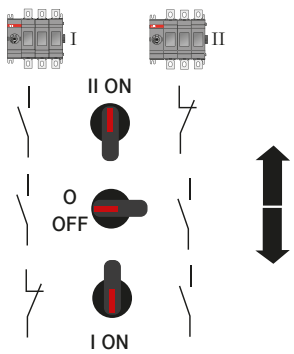

Bypass switches

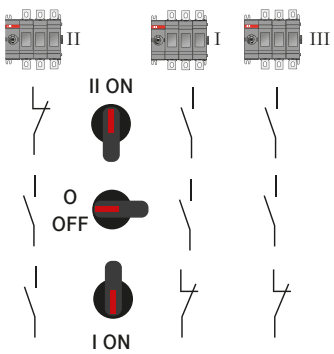

Ordering information
Accessories

OEMO_
S00039A

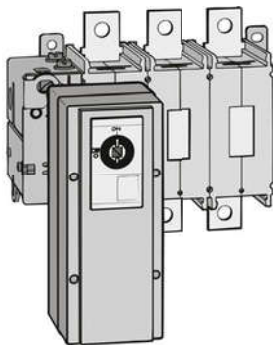

Motor operator

For remote control of the switch. The standard delivery includes complete control circuit; short cable and spare handle.

Suitable for switches	Voltage	Type	Order number	Units/ type [pcs]	Weight/ unit [kg]
Function I-0 (ON-OFF)					
OETL3150	110 VAC	OEMO004/110VAC	1SCA022182R0300	1	6.30
OETL3150	230 VAC	OEMO004/230VAC	1SCA022196R9010	1	6.30

OETLZX108
S00063A

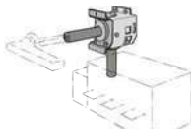

90° angle kit

A front operated switch can be converted to a side operated switch[1)]

OETL3150	OETLZX108	1SCA022087R8430	1	2.10

[1)] Mounting: OETL3150 on mounting plate, key hole fixing. The shaft delivered with the switch can be used.

Locking accessories

OETLZW16, 5
S00059A

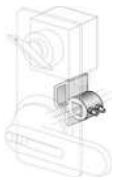

Suitable for switches	Type	Order number	Units/ type [pcs]	Weight/ unit [kg]
Cam attachment for Castell, Lowe & Fletcher and Ronis interlock				
Cam attachment for Castell, Lowe & Fletcher or Ronis interlock. Lock, handle or shaft not included. Mounting to OXP-shaft, works together with OH-door handle and a shaft. This accessory is mounted to the operating shaft of the switch and therefore only compatible with external handles.				
OT16...250	OETLZW16	1SCA022093R2070	1	0.17
OT315...2500, OETL3150	OETLZW5	1SCA022052R3900	1	0.14

SA1
S00683A



Padlocking adapter				
For a padlock with max. 3.5 mm bail.				
OT100...125	SA1	GJF1 101 903 R000	1	0.01

OHZX4
S01027A



Door interlock bracket				
Prevents defeating the door interlock.				
For pistol type handles OH_45...275	OHZX4	1SCA022467R2470	1	0.03

Ordering information
Accessories

OTZT1_
S04001



OTZT3_
S04003



OTZL4
S07057



1SDA062127R1
S07058



OT_EM_ + OTZL4
S07059

OT switch + OTZL4 or Emax, T7



Mechanical and electrical interlocks

Mechanism interlock kits and electrical interlocks

OT160EV…2500 switch-disconnectors can be interlocked in the OFF-position using padlocks or a mechanical interlock kit mounted on the mechanism. The diameter of the lock bail can be max 8 mm.

Suitable for switches	Type	Order number	Units/ type [pcs]	Weight/ unit [kg]
Interlocking in the OFF-position				
OT160EV…250	OTZT1A	1SCA106522R1001	1	0.21
OT315…400	OTZT2A	1SCA106523R1001	1	0.57
OT600U, OT630…800E	OTZT3A	1SCA106525R1001	1	0.75
OT800U, OT1000…2500	OTZT4A	1SCA106526R1001	1	1.15
Interlocking in the OFF- and ON-positions				
OT160EV…250	OTZT1L	1SCA106527R1001	1	0.21
OT315…400	OTZT2L	1SCA106529R1001	1	0.57
OT600U, OT630…800E	OTZT3L	1SCA106530R1001	1	0.75
OT800U, OT1000…2500	OTZT4L	1SCA106531R1001	1	1.15

Mechanical interlock between OT earthing switch and OT1000…2500 switch-disconnector or E-max / T7 breaker

The operation of both the earthing switch and the switch-disconnector / breaker into ON-position at the same time is mechanically prevented by using two cables between the earthing switch and main switch or breaker. Cable length 1370 mm.

Suitable for switches	Description	Type	Order number	Units/ type [pcs]	Weight/ unit [kg]
Mechanical interlock kit					
OT1000…2500		OTZL4	1SCA116554R1001	1	0.5
Cable set					
OT1000…2500, E-max/T7	Including 2 pcs 1370 mm long cables	-	1SDA062127R1	1	0.2

Electrical interlock kit

Suitable for switches	Description	Type	Order number	Units/ type [pcs]	Weight/ unit [kg]
OT1000...2500E	Locking in OFF-position	OTZM4A	1SCA118510R1001	1	0.85
OT1000…2500E	Locking in OFF- and ⏚ -position	OTZM4L	1SCA118511R1001	1	0.85

Ordering information
Accessories

OTZM4_
S07056



PDAL2_
S04005



Coils for OTZT_ and OTZM_ electrical interlocks

By installing a coil inside the housing of the interlock kit the switch can be interlocked electrically in the OFF-position or both in the OFF- and ON-positions. The electrical interlock works using the “closed circuit principle”, meaning that when the control voltage is not connected to the coil. The switches provided with A-type interlocks cannot be turned to the ON-position and switches with L-type interlocks cannot be turned to the ON- or OFF-positions.

Suitable for switches	Type	Order number	Units/ type [pcs]	Weight/ unit [kg]
AC coils				
24 VAC, 60Hz	PDAL2/24AC60Hz	1SCA111350R1001	1	0.15
110 VAC, 50Hz	PDAL2/110AC50Hz	1SCA106543R1001	1	0.15
110 VAC, 60Hz	PDAL2/110AC60Hz	1SCA107100R1001	1	0.15
120 VAC, 60 Hz	PDAL2/120AC60Hz	1SCA111353R1001	1	0.15
208 VAC, 60Hz	PDAL2/208AC60Hz	1SCA107101R1001	1	0.15
230 VAC, 50Hz	PDAL2/230AC50Hz	1SCA107102R1001	1	0.15
240 VAC, 60Hz	PDAL2/240AC60Hz	1SCA111356R1001	1	0.15
DC coils				
24 VDC	PDAL2/24DC	1SCA106542R1001	1	0.15
48 VDC	PDAL2/48DC	1SCA107103R1001	1	0.15
60 VDC	PDAL2/60DC	1SCA107104R1001	1	0.15
110 VDC	PDAL2/110DC	1SCA107105R1001	1	0.15
125 VDC	PDAL2/125DC	1SCA111338R1001	1	0.15
220 VDC	PDAL2/220DC	1SCA112503R1001	1	0.15
Technical data for the coil				
Operating voltage				U = 0.7...1.1 x U_n
Operating ambient temperature				- 40°C...+65°C
Power consumption			with AC	6.5 W
			with DC	9 VA

Ordering information
Accessories

OETLZT80_
S00052A

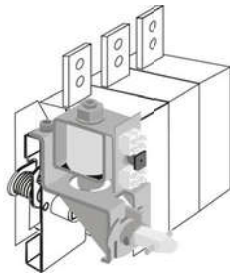

Electrical interlock for OETL3150

The electrical interlock works with the closed circuit principle: when the coil circuit is dead, A-types can not be switched to ON-position and L-types to ON- or OFF-position. Auxiliary contacts are mountable on the top of the mechanism.

Coil voltage	Type	Order number	Units/ type [pcs]	Weight/ unit [kg]
OETLZT80_/_ U_n /R: 110VAC/1000Ω, 230VAC/3900Ω, 24VDC/48Ω, 48VDC/190Ω, 60VDC/300Ω, 110VDC/1000Ω, 220VDC/3900Ω, U=0.7...1.1*U_n , PDC=15 W, PAC = 30VA				
A - types				
24 V DC	OETLZT80A24DC	1SCA022081R1440	1	1.10
48 V DC	OETLZT80A48DC	1SCA022081R1010	1	1.10
60 V DC	OETLZT80A60DC	1SCA022081R0630	1	1.10
110 V DC	OETLZT80A110DC	1SCA022081R0210	1	1.10
220 V DC	OETLZT80A220DC	1SCA022080R9890	1	1.10
110V AC	OETLZT80A110AC	1SCA022080R9460	1	1.10
220 V AC	OETLZT80A220AC	1SCA022079R9050	1	1.10
240 V AC	OETLZT80A240AC	1SCA022384R3330	1	1.10
L - types				
24 V DC	OETLZT80L24DC	1SCA022081R1280	1	1.10
48 V DC	OETLZT80L48DC	1SCA022081R0800	1	1.10
60 V DC	OETLZT80L60DC	1SCA022081R0470	1	1.10
110 V DC	OETLZT80L110DC	1SCA022081R0040	1	1.10
220 V DC	OETLZT80L220DC	1SCA022080R9620	1	1.10
110 V AC	OETLZT80L110AC	1SCA022080R9200	1	1.10
220 V AC	OETLZT80L220AC	1SCA022079R9640	1	1.10
230 V AC	OETLZT80L230AC	1SCA022375R0240	1	1.10
240 V AC	OETLZT80L240AC	1SCA022496R2040	1	1.10

A-type

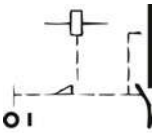

L-type

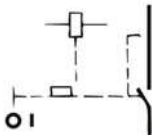

Dimension drawings
Front operated switch-disconnectors

OT16...40F3, _F4

Shaft	Handle	Handle
OXS	OH_S2	OH_S1
A/mm	L min/max	L min/max
85	107/126	93/110
105	127/146	113/130
120	142/161	128/145
130	152/171	138/155
160	182/201	168/185
180	202/221	188/205
250	272/291	258/275
330	352/371	338/355

Shaft	Handle
OX	OZ331_P
A/mm	L min/max
60	92/120
85	117/145
105	137/165
115	147/175
130	162/190
155	187/215
200	232/260
300	332/360

M00157/OT16-40F3_F4 C

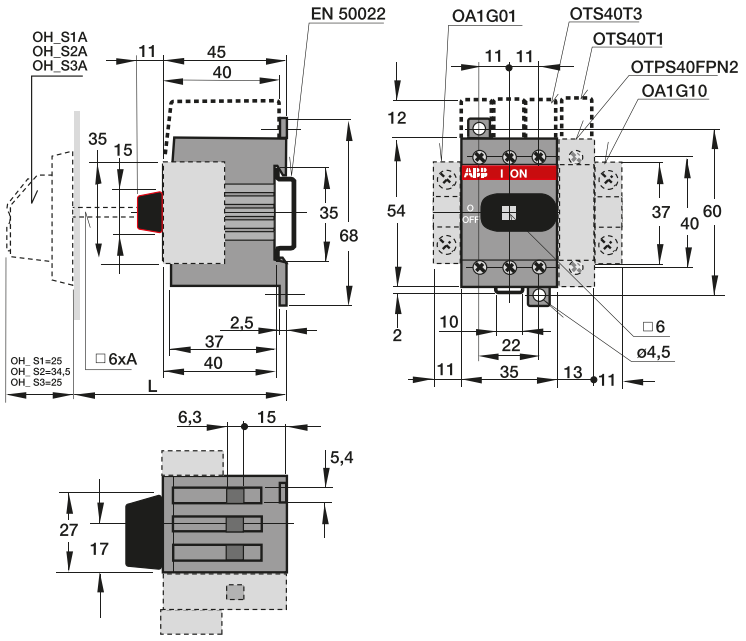

OT63...80F3, _F4

Shaft	Handle	Handle
OXS	OH_S2	OH_S1
A/mm	L min/max	L min/max
85	123,5/142,5	109,5/126,5
105	143,5/162,5	129,5/146,5
120	158,5/177,5	144,5/161,5
130	168,5/187,5	154,5/171,5
160	198,5/217,5	184,5/201,5
180	218,5/237,5	204,5/221,5
250	288,5/307,5	274,5/291,5
330	368,5/387,5	354,5/371,5

Shaft	Handle
OX	OZ331_P
A/mm	L min/max
60	108,5/136,5
85	133,5/161,5
105	153,5/181,5
115	163,5/191,5
130	178,5/206,5
155	203,5/231,5
200	248,5/276,5
300	348,5/376,5

M00161/OT63-80F3_F4 C

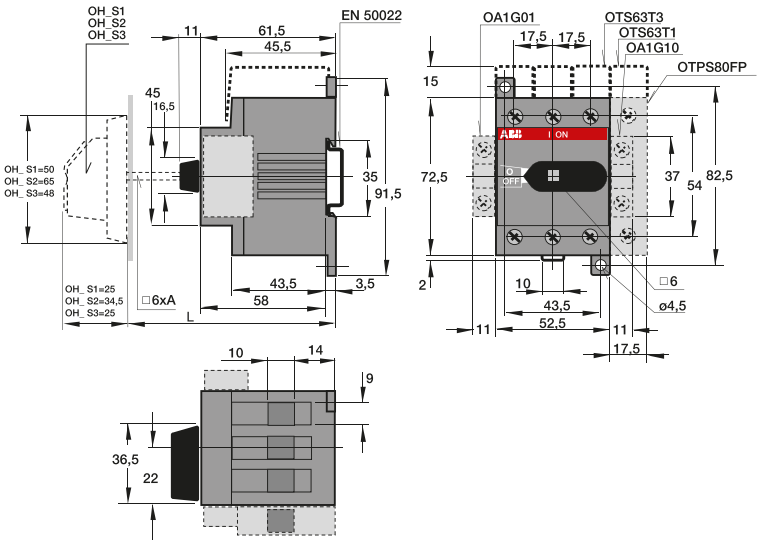

Dimension drawings
Front operated switch-disconnectors

OT30, 60, 100, 125F3, _F4

Shaft	Handle	Handle
OXS	OH_S2	OH_S1
A/mm	L min/max	L min/max
85	127/139	113/123
105	147/159	133/143
120	162/174	148/158
130	172/184	158/168
160	202/214	188/198
180	222/234	208/218
250	292/304	278/288
330	372/384	358/368

Shaft	Handle
OX	OZ331_P
A/mm	L min/max
60	112/133
85	137/158
105	157/178
115	167/188
130	182/203
155	207/228
200	252/273
300	352/373

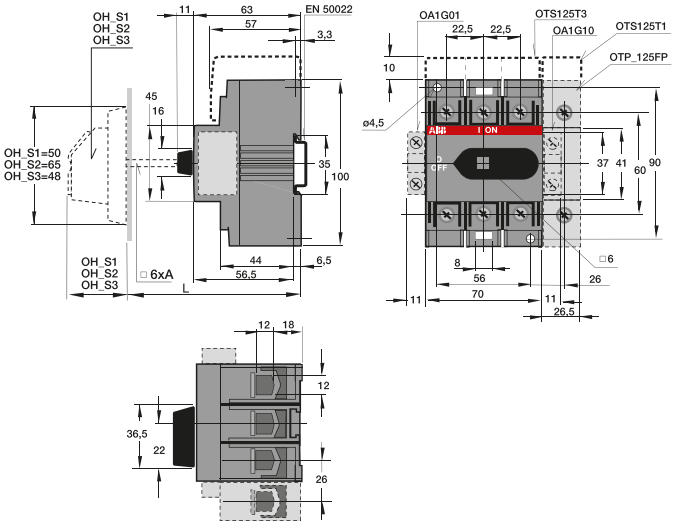

M00166/OT100-125F3_4 D

Dimension drawings
Front operated switch-disconnectors

OT125FL3 and OT125FLA3

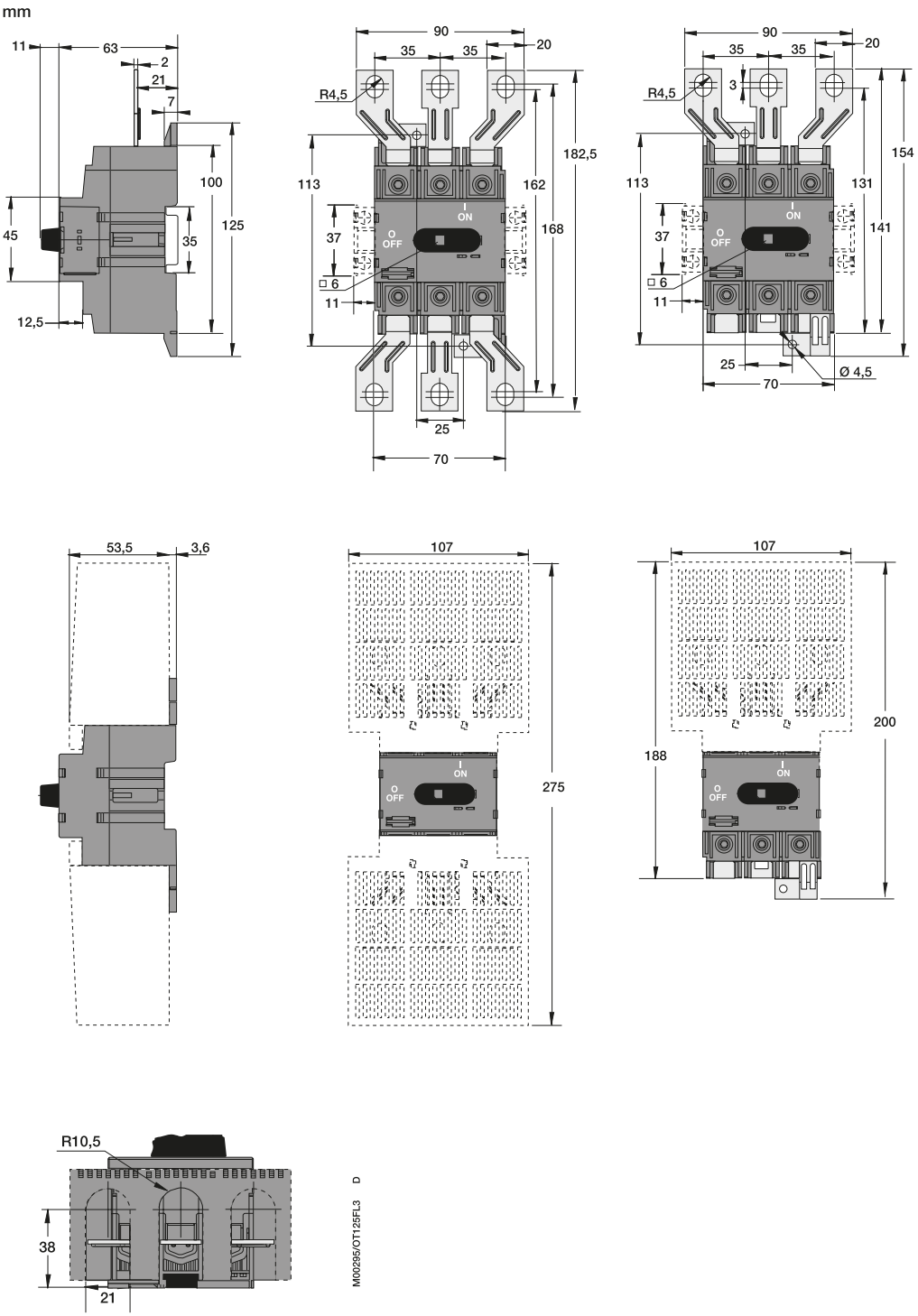

Dimension drawings
Front operated switch-disconnectors

OT16...40F6, _F8

Shaft OXS	Handle OH_S2	Handle OH_S1
A/mm	L min/max	L min/max
85	110/120	124/136
105	130/140	144/156
120	145/155	159/171
130	155/165	169/181
160	185/195	199/211
180	205/215	219/231
250	275/285	289/301
330	355/365	369/381

Shaft OXS	Handle OZ331_P
A/mm	L min/max
60	109/130
85	134/155
105	154/175
115	164/185
130	179/200
155	204/225
200	249/270
300	349/370

M00159/OT16-40F6_8 D

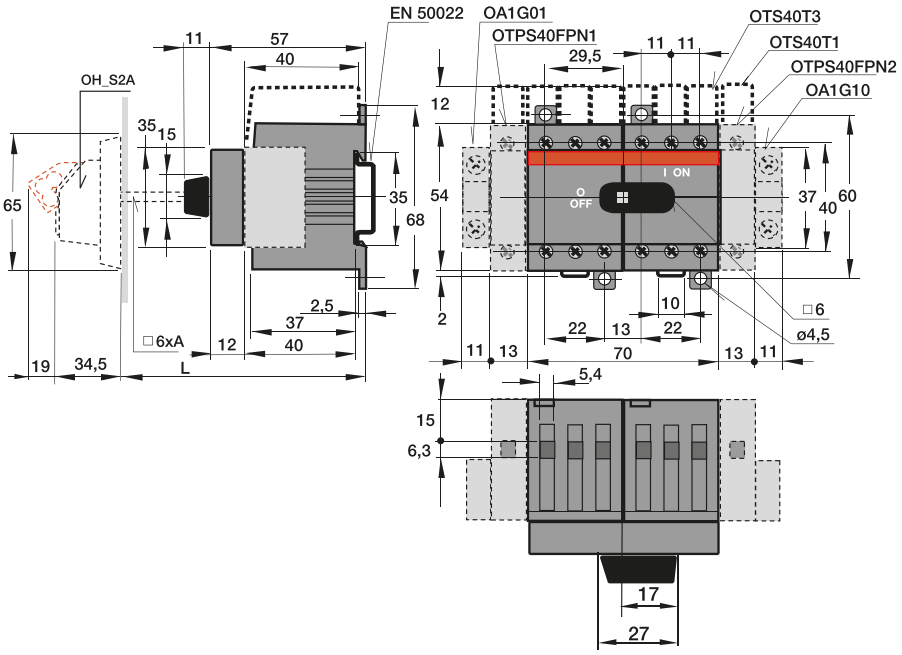

OT63...80F6, _F8

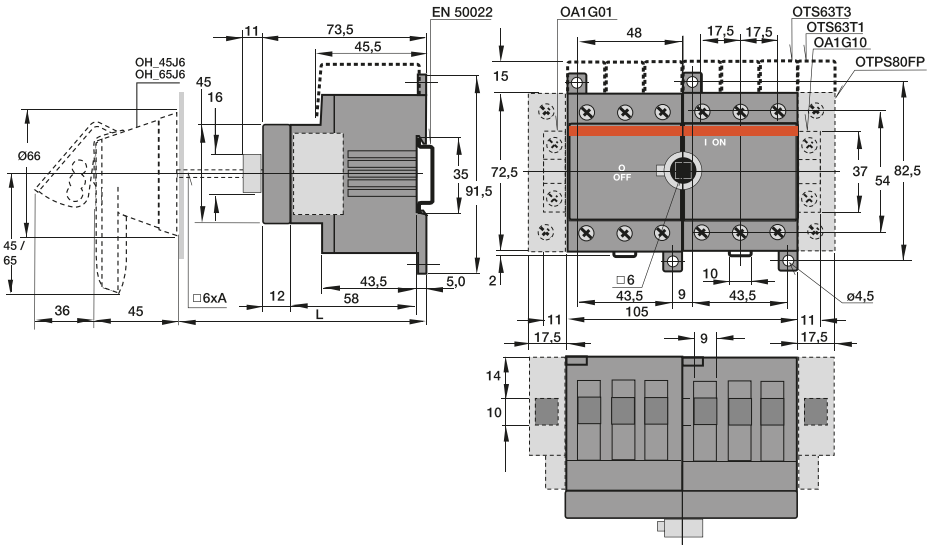

M00163/OT63-80F6 B

OH_45J6, OH_65J6	
A	L
130	166...176
150	186...196
210	246...256
290	326...336
360	396...406
430	466...476

Dimension drawings
Front operated switch-disconnectors

OT100...125F6, _F8

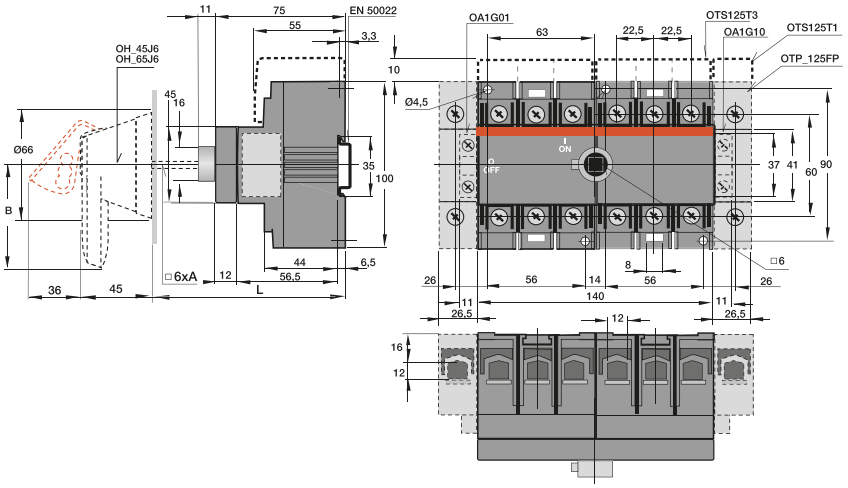

M00165/OT100-125F6 B

OH_45J6, OH_65J6	
A	L
130	165...175
150	185...195
210	245...255
290	325...335
360	395...405
430	465...475

OT16...40FT3, _FT4, door mounting

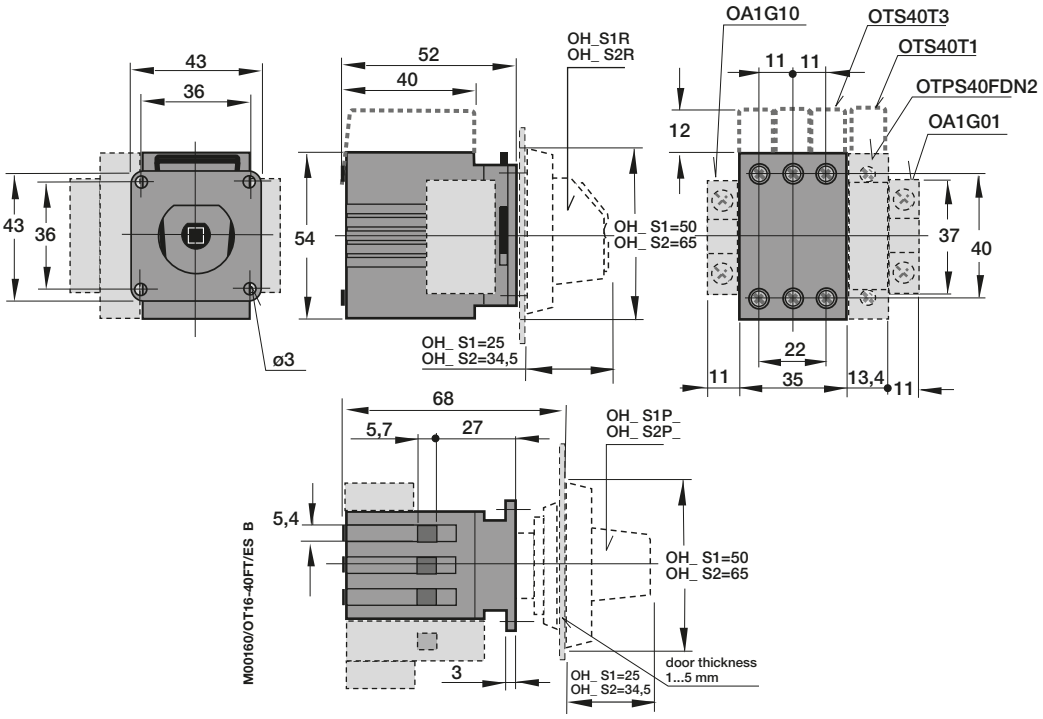

M00160/OT16-40FT/ES B

Dimension drawings
Front operated switch-disconnectors

OT63...80FT3, _FT4, door mounting

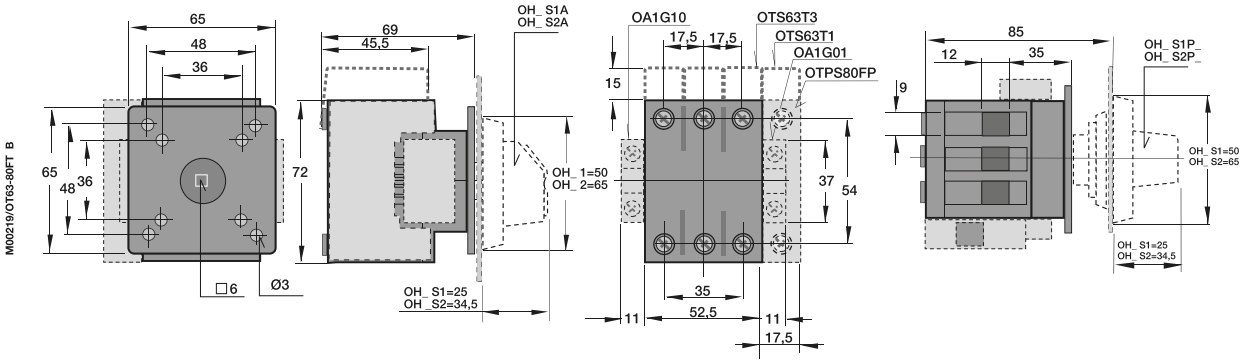

OT100...125FT3, _FT4, door mounting

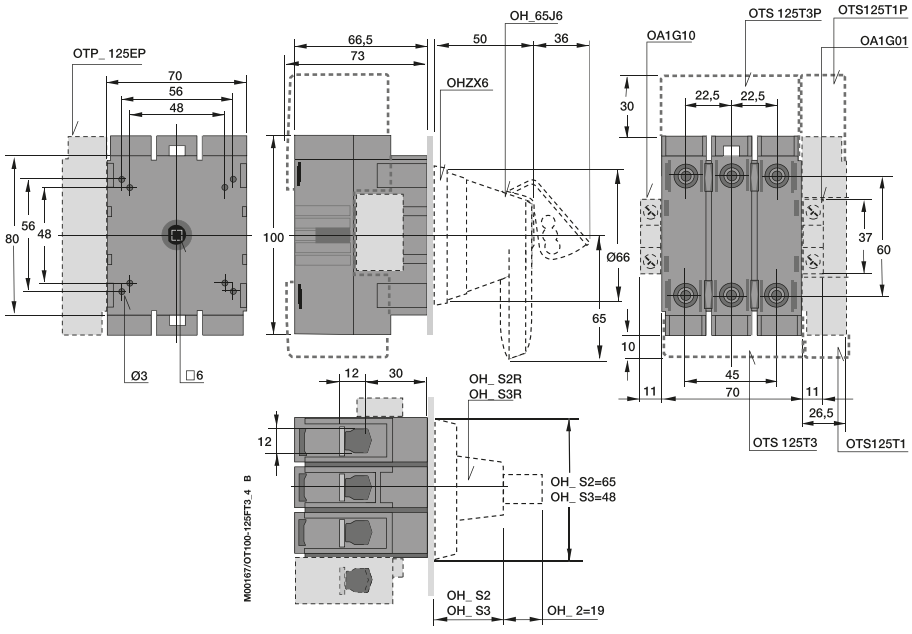

Dimension drawings
Front operated switch-disconnectors

OTDC16...32F DC-switch-disconnector

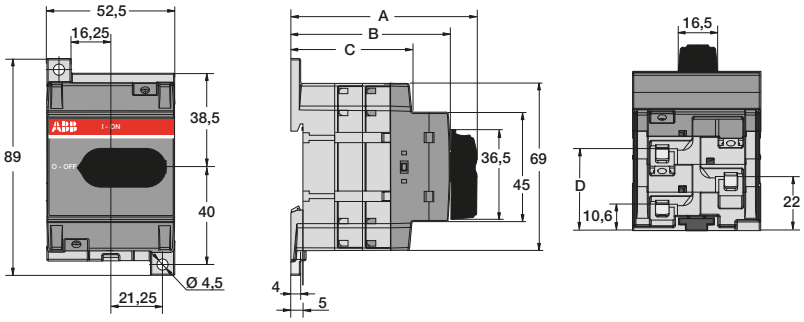

S07151 / M00371 / OTDC16-32_ B

OTDC16...32F_				
Dimension [mm]				
Number of poles	A	B	C	D
2	66,2	54,1	38,3	22
3	77,6	65,5	49,7	33,4
4	89	76,9	61,1	44,8

OTDC16...32FT_ DC-switch-disconnector, door mounting

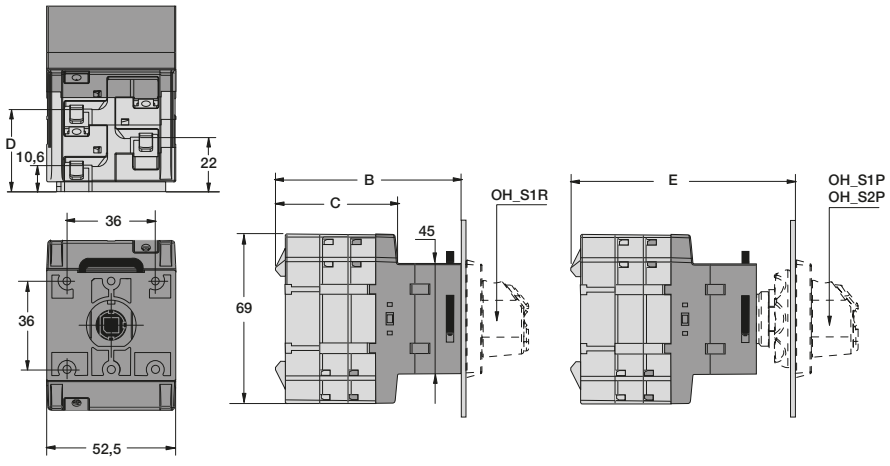

M00416/OTDC32FT-1 B

OTDC32FT_				
[mm/in]	B	C	D	E
FT2	64,1	38,3	22	79,9
FT3	75,5	49,7	33,4	91,3
FT4	86,9	61,1	44,8	102,7

Dimension drawings
Front operated switch-disconnectors

OT160EV_P, OT200_P and OT250_P

Mechanism at the end of the switch

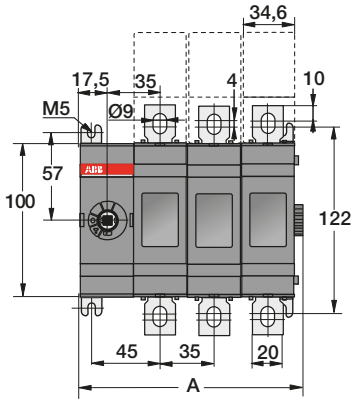

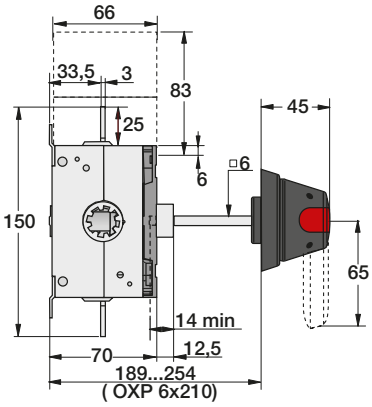

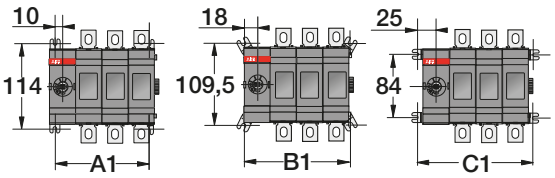

M00011/S01843 OT200_250E01_04 F

OT160EV_/200E_/250E_

[mm]	E01	E02	E03	E04
A	75,5	110,5	145,5	180,5
A1	55	90	125	160
B1	71	106	141	176
C1	85	120	155	190

OT160EV_P, OT200_P and OT250_P

Mechanism between the poles

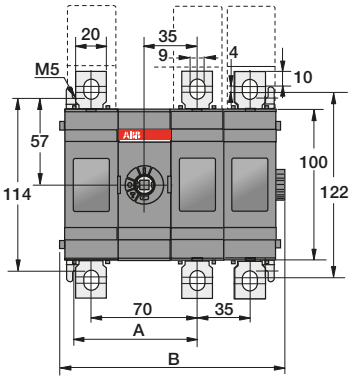

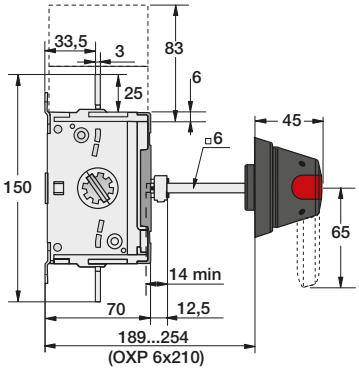

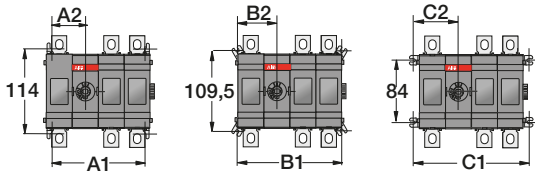

M00017/OT200_250E11_22 F

OT160EV_/200E_/250E_

[mm]	E11	E12	E13	E22
A	80	80	80	115
B	115,5	150,5	185,5	185,5
A1	90	125	160	160
A2	45	45	45	80
B1	106	141	141	176
B2	53	53	53	88
C1	120	155	190	190
C2	60	60	60	95

Dimension drawings
Front operated switch-disconnectors

OT315_P and OT400_P

Mechanism at the end of the switch

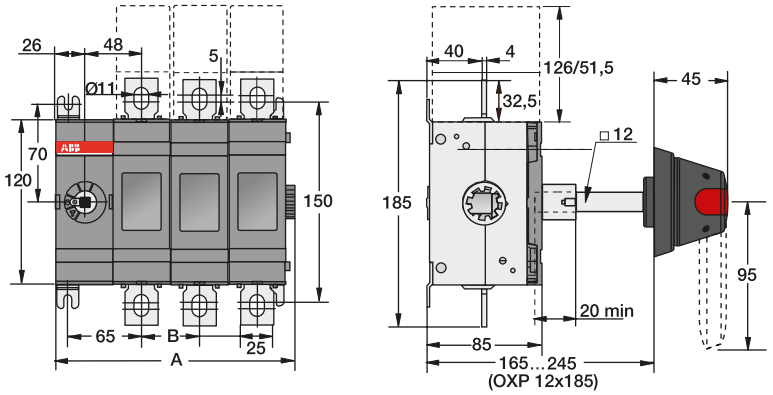

M00012_ES/OT315_400E01_04 E

OT315_...OT400_				
[mm]	E01	E02	E03	E04
A	103	147	191	235
B	-	44	44	44
A1	140	140	140	140
A2	78	122	166	210
B1	135	135	135	135
B2	96	140	184	228
C1	104	104	104	104
C2	114	158	202	246

OT315_P and OT400_P

Mechanism between the poles

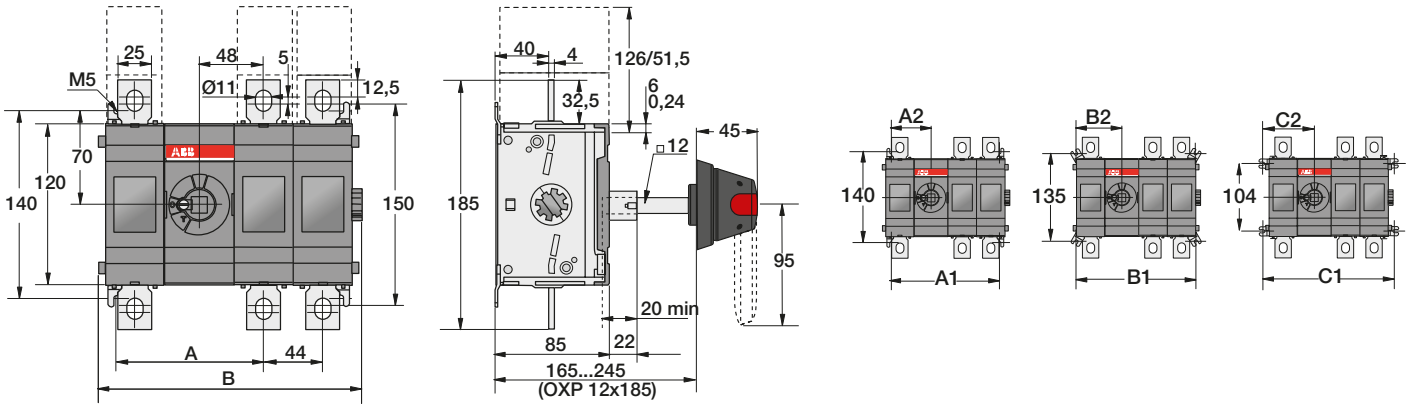

M00018/OT315_400E11_22 E

OT315/400_				
[mm]	E11	E12	E13	E22
A	109	109	109	153
B	152	196	240	240
A1	122	166	210	210
A2	61	61	61	105
B1	140	184	228	228
B2	70	70	70	114
C1	158	202	246	246
C2	79	79	79	123

Dimension drawings
Front operated switch-disconnectors

OT630_P and OT800_P

Mechanism at the end of the switch

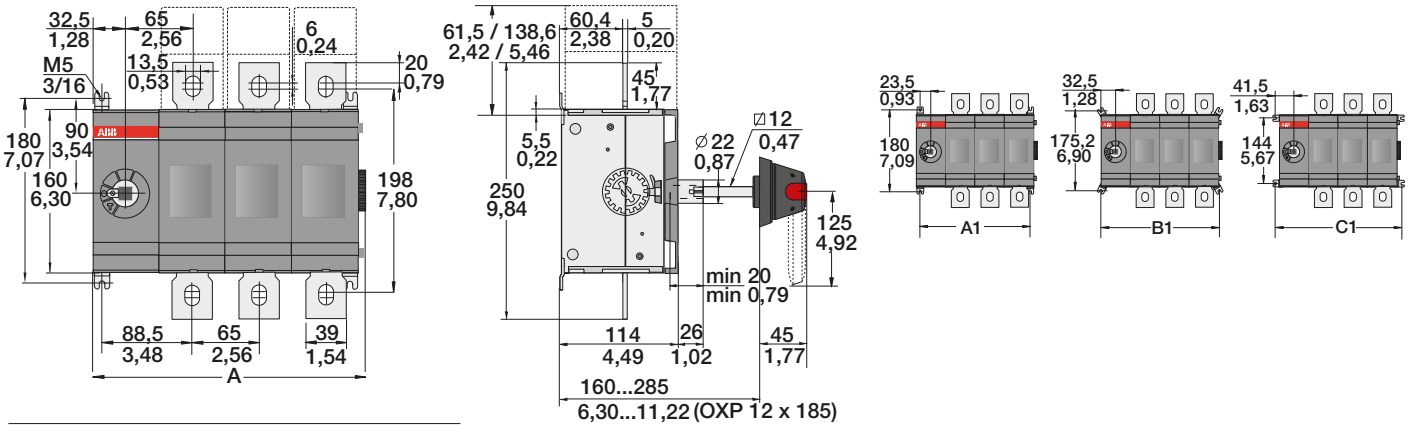

C00013_13OT630_800_01_04 B

OT600/630/800

[mm/in]	E01/U01	E02/U02	E03/U03	E04/U04
A	136/5,35	201/7,91	266/10,47	331/13,03
A1	112/4,41	177/6,97	242/9,53	307/12,09
B1	130/5,12	195/7,68	260/10,24	325/12,80
C1	148/5,83	213/8,39	278/10,95	343/13,50

OT630_P and OT800_P

Mechanism between the poles

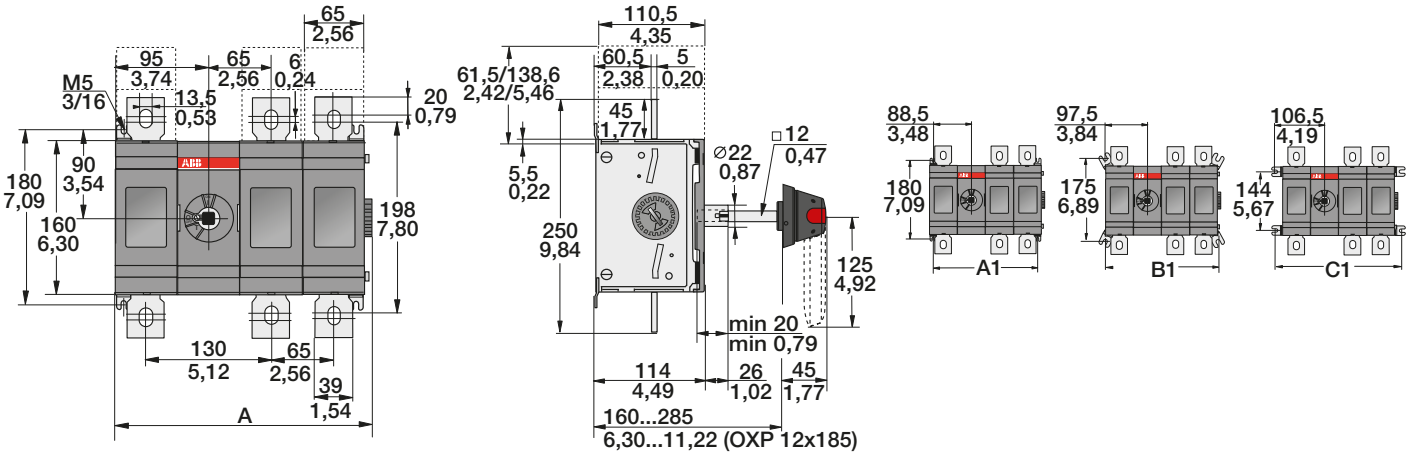

V00082/OT630-800_11_22 C

OT600/630/800

[mm/in]	E11/U11	E12/U12	E13/U13	E22/U22
A	201/7,91	266/10,47	331/13,03	331/13,03
A1	177/6,97	242/9,53	307/12,09	307/12,09
B1	195/7,68	260/10,24	325/12,80	325/12,80
C1	213/8,39	278/10,95	343/13,50	343/13,50

Dimension drawings
Front operated switch-disconnectors

OT1000_P, OT1250_P, OT1600_P and OT800U_P, OT1200U_P

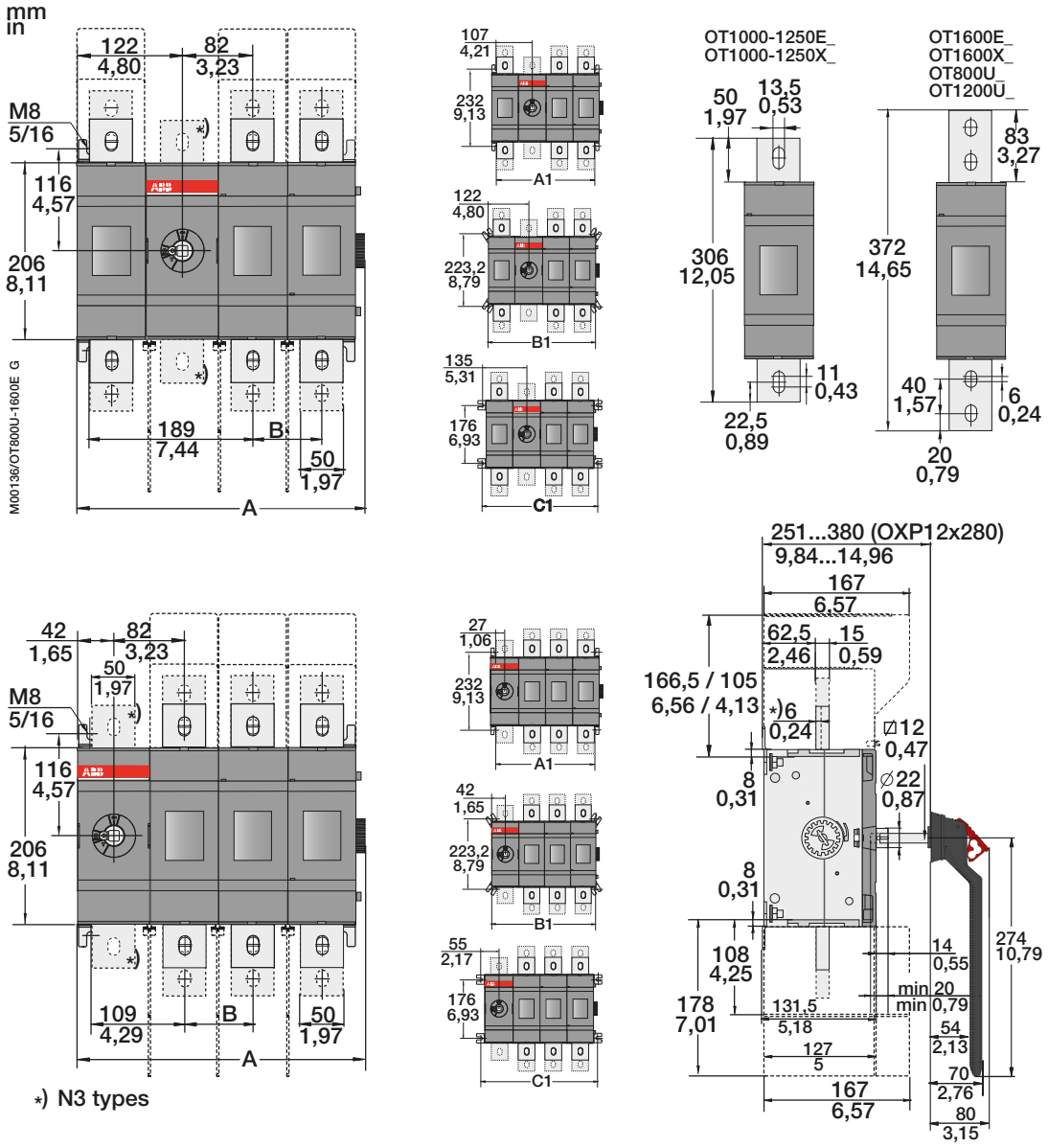

M00135/OT800U-1600E G

OT1000/1250/1600E_, OT800/1200U_

[mm/in]	01	02	03	04	11	12	13	22	03W4	04W4	03W8	04W8
A	174,50/6,87	254,50/10,02	334,50/13,17	414,50/16,32	254,50/10,02	334,50/13,17	414,50/16,32	414,50/16,32	454,50/17,89	594,50/23,41	544,50/21,44	729,50/28,72
B		80/3,15	80/3,15	80/3,15		80/3,15	80/3,15	80/3,15	140/5,51	140/5,51	185/7,28	185/7,28
A1	134/5,28	214/8,43	294/11,57	374/14,72	214/8,43	294/11,57	374/14,72	374/14,72	414/16,30	554/21,81	504/19,84	689/27,13
B1	164/6,46	244/9,61	324/12,76	404/15,91	244/9,61	324/12,76	404/15,91	404/15,91	444/17,48	584/22,99	534/21,02	719/28,31
C1	190/7,48	270/10,63	350/13,78	430/16,93	270/10,63	350/13,78	430/16,93	430/16,93	470/18,50	610/24,02	560/22,05	745/29,33

Dimension drawings
Front operated switch-disconnectors

OT2000_P and OT2500_P

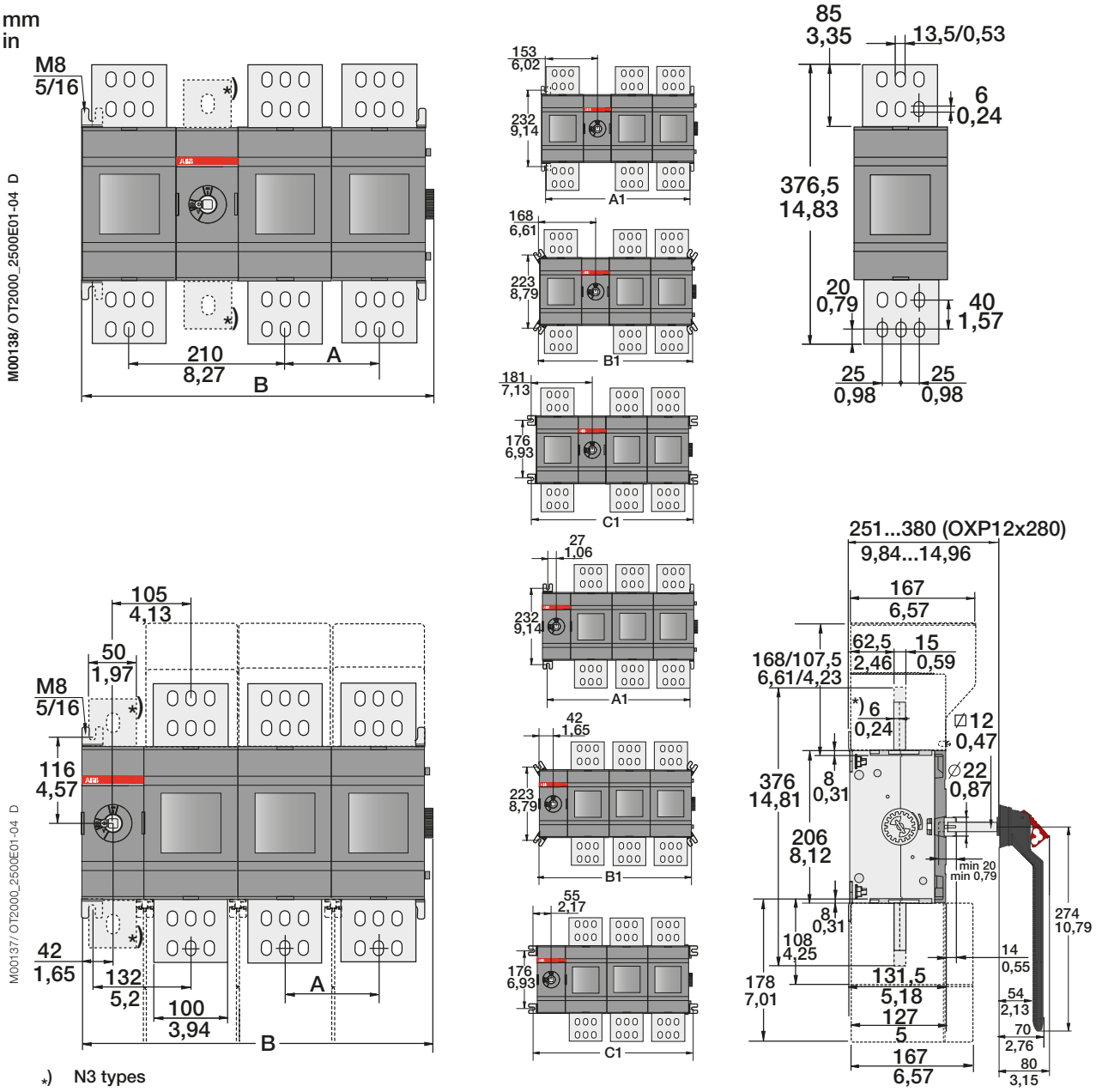

OT2000/2500E_												
[mm/in]	01	02	03	04	11	12	13	22	03W4	04W4	03W8	04W8
A		126/4,96	126/4,96	126/4,96		126/4,96	126/4,96	126/4,96	140/5,51	140/5,51	185/7,28	185/7,28
B	220,5/8,68	346,5/13,64	472,5/18,60	598,5/23,56	346,5/13,64	472,5/18,60	598,5/23,56	598,5/23,56	500,5/19,70	640,5/25,22	590,5/23,25	775,5/30,53
A1	180/7,09	306/12,05	432/17,01	558/21,97	306/12,05	432/17,01	558/21,97	558/21,97	460/18,11	600/23,62	550/21,65	735/28,94
B1	210/8,27	336/13,23	462/18,19	588/23,15	336/13,23	462/18,19	588/23,15	588/23,15	490/19,29	630/24,80	580/22,83	765/30,12
C1	236/9,29	362/14,25	488/19,21	614/24,17	362/14,25	488/19,21	614/24,17	614/24,17	516/20,31	656/25,83	606/23,86	791/31,14

Dimension drawings
Front operated switch-disconnectors

OETL3150K_

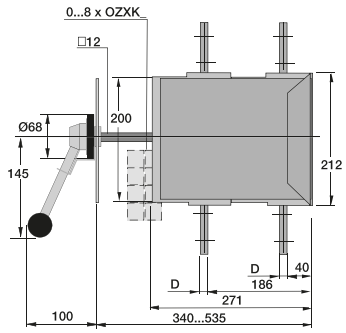

OETL 3150K3
OETL 3150K185

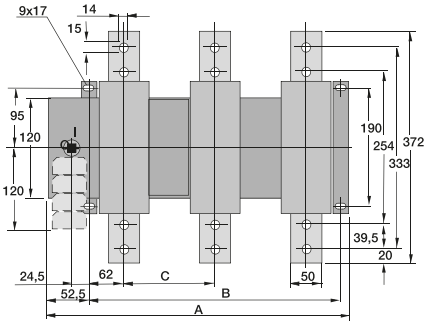

OETL 3150K4

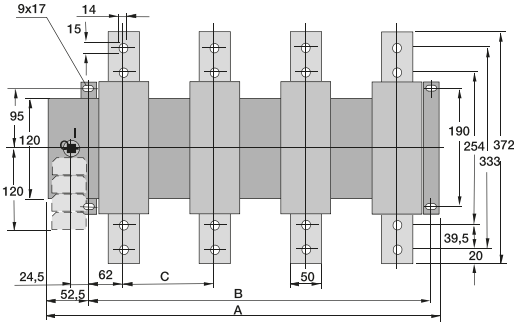

S00667A

OETL3150			
[mm]	K3	K185	K4
A	468	562	607
B	403	497	542
C	139	186	139
D	16	16	16

OETL3150KV_

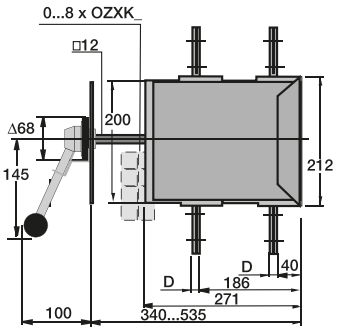

OETL 3150KV12

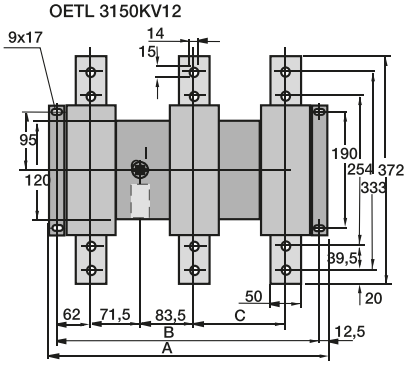

OETL 3150KV13

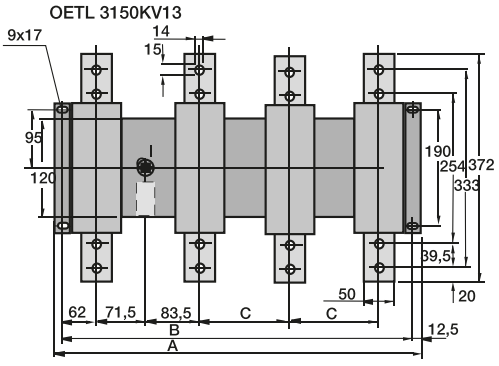

OETL 3150KV22

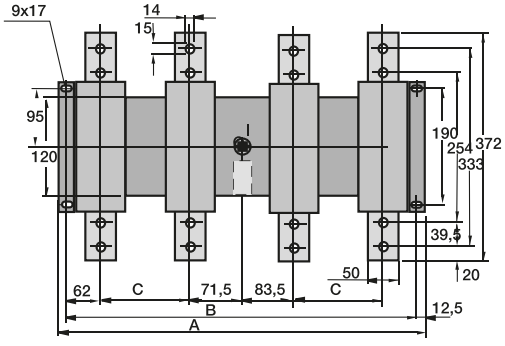

S00130B

OETL3150			
[mm]	KV12	KV13	KV22
A	443	582	582
B	418	557	557
C	139	139	139
D	16	16	16

Dimension drawings
Front operated switch-disconnectors

OT160EV_WP, OT200_WP and OT250_WP

Mechanism at the end of the switch

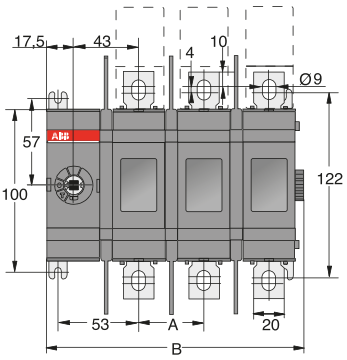

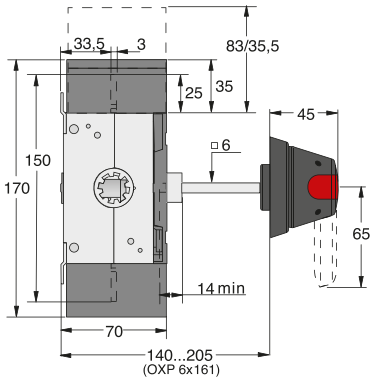

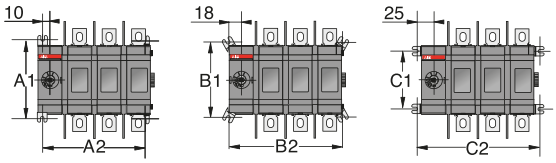

M00073/OT200E01_04W A

OT160EV_/200E_/250E_				
[mm]	E01W	E02W	E03W	E04W
A	-	43	43	43
B	83,5	126,5	169,5	212,5
A1	114	114	114	114
A2	63	106	149	192
B1	109,5	109,5	109,5	109,5
B2	79	122	165	208
C1	84	84	84	84
C2	93	136	179	222

OT160EV_WP, OT200_WP and OT250_WP

Mechanism between the poles

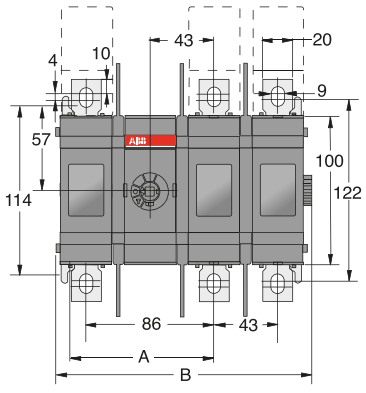

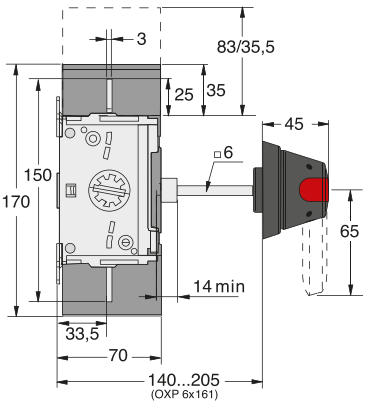

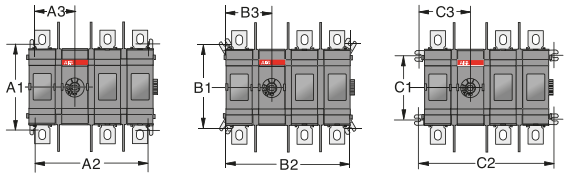

M00074/OT200E11_22W A

OT160EV_/200E_/250E_				
[mm]	E11W	E12W	E13W	E22W
A	96	96	96	139
B	131,5	174,5	217,5	217,5
A1	114	114	114	114
A2	106	149	192	192
A3	53	53	53	96
B1	109,5	109,5	109,5	109,5
B2	122	165	208	208
B3	61	61	61	104
C1	84	84	84	84
C2	136	179	222	222
C3	68	68	68	111

Dimension drawings
Front operated switch-disconnectors

OT315_WP and OT400_WP

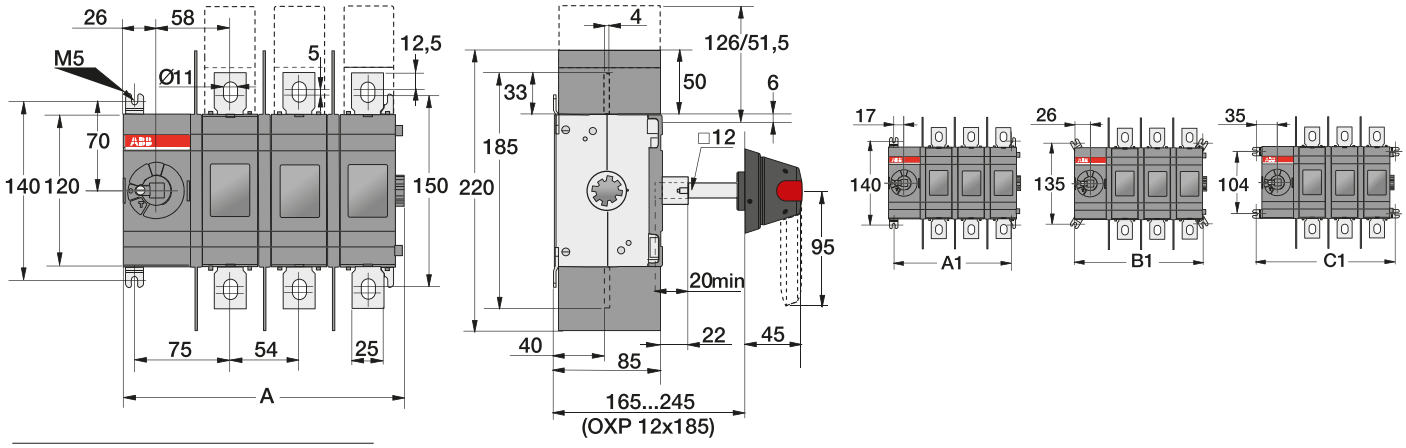

M00019/OT400U/E01_04W/ES G

OT315/400

[mm]	E01W	E02W	E03W	E04W
A	113	167	221	275
A1	88	142	196	250
B1	106	160	214	268
C1	124	178	232	286

Remark: Dimension drawings for types OT1000_W_P...OT2000_W_P, see pages 83 and 84

OT160EV_K, OT200_K and OT250_K

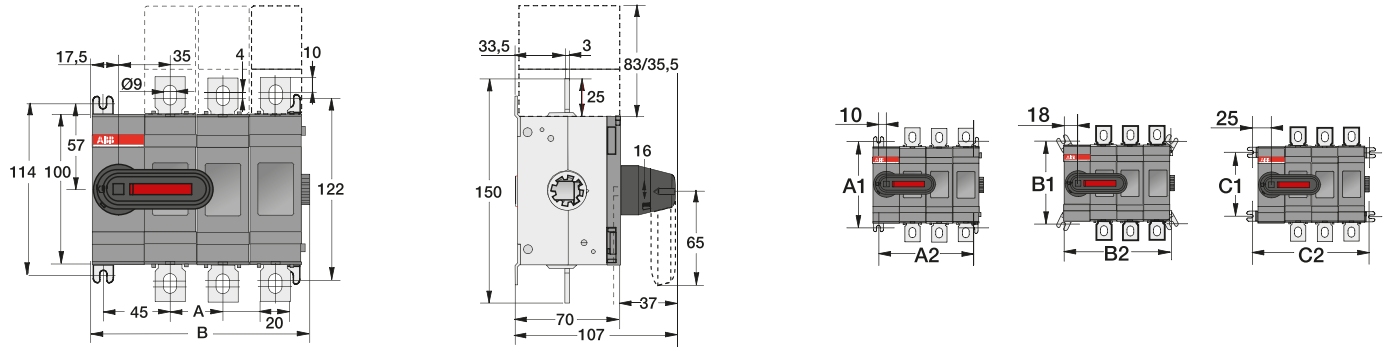

M00078/OT200_250E01_04K A

OT160EV_/200E_/250E_

[mm]	E01K	E02K	E03K	E04K
A	-	35	35	35
B	75,5	110,5	145,5	180,5
A1	114	114	114	114
A2	55	90	125	160
B1	109,5	109,5	109,5	109,5
B2	71	106	141	176
C1	84	84	84	84
C2	85	120	155	190

Dimension drawings
Front operated switch-disconnectors

OT315_K and OT400_K

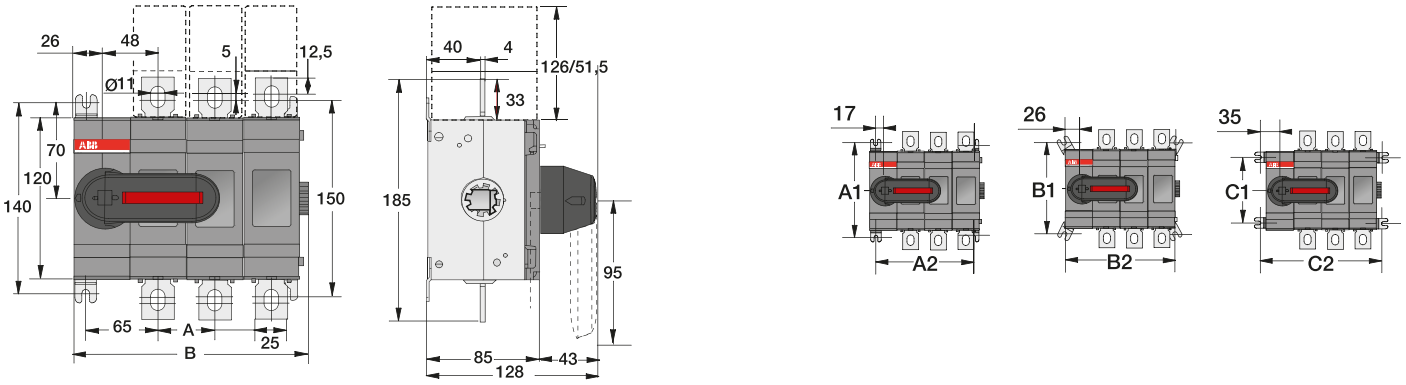

M00079/OT315_400E01_04K A

OT315_...OT400_

[mm]	E01K	E02K	E03K	E04K
A	-	44	44	44
B	103	147	191	235
A1	140	140	140	140
A2	78	122	166	210
B1	135	135	135	135
B2	96	140	184	228
C1	104	104	104	104
C2	114	158	202	246

OT630_K and OT800_K

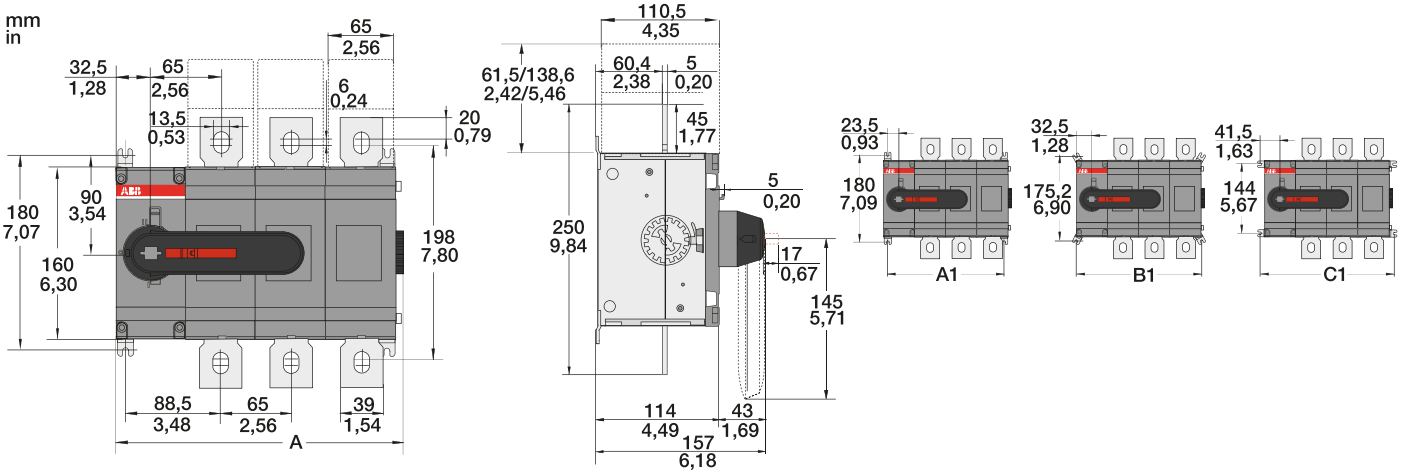

M00096/13*OT630-800_01-04K/ES A

OT630/800

[mm/in]	E01K	E02K	E03K	E04K
A	136/5,35	201/7,91	266/10,47	331/13,03
A1	112/4,41	177/6,97	242/9,53	307/12,09
B1	130/5,12	195/7,68	260/10,24	325/12,80
C1	148/5,83	213/8,39	278/10,95	343/13,50

Remark: OT1000...2500_K, see dimension drawings for switches from pages 83 and 84, dimension drawings for direct mounted handle OTV1000EK, see page 103

Dimension drawings
Front operated switch-disconnectors

OT200U_P

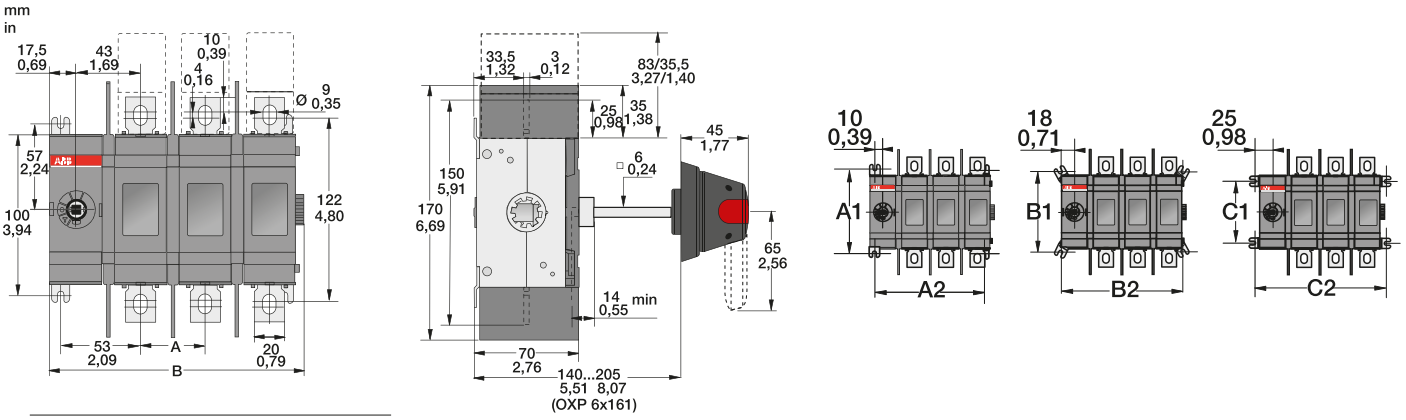

OT200

[mm/in]	U01	U02	U03	U04
A	-	43/1,69	43/1,69	43/1,69
B	83,5/3,24	126,5/4,98	169,5/6,67	212,5/8,37
A1	114/4,49	114/4,49	114/4,49	114/4,49
A2	63/2,48	106/4,17	149/5,87	192/7,56
B1	109,5/4,31	109,5/4,31	109,5/4,31	109,5/4,31
B2	79/3,11	122/4,80	165/6,50	208/8,19
C1	84/3,31	84/3,31	84/3,31	84/3,31
C2	93/3,66	136/5,35	179/7,05	222/8,74

M00009/OT200U01_04 E

OT400U_P

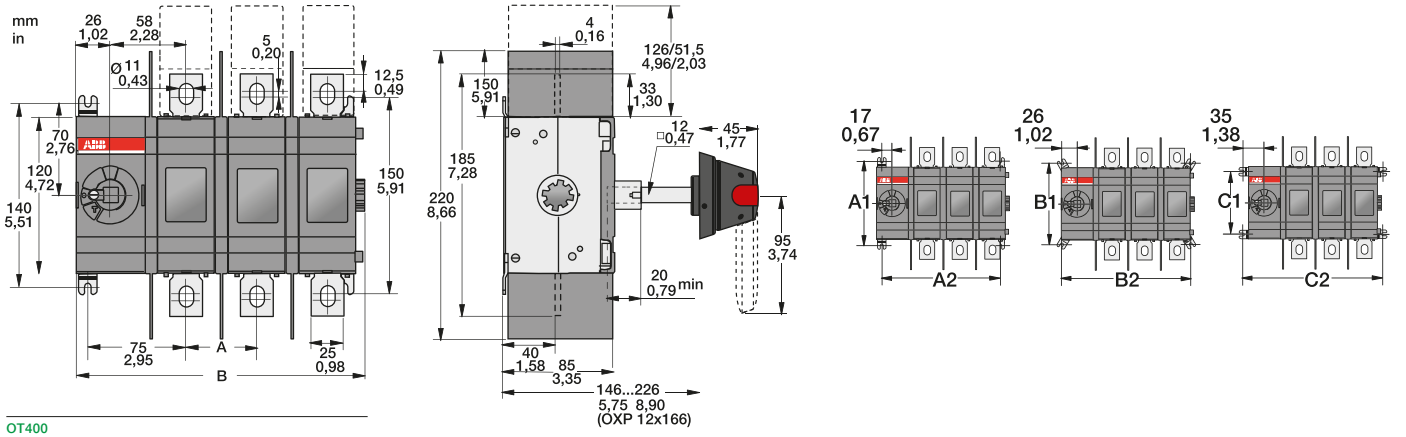

OT400

[mm/in]	U01	U02	U03	U04
A	-	54/2,13	54/2,13	54/2,13
B	113/4,45	167/6,58	221/8,70	275/10,83
A1	140/5,51	140/5,51	140/5,51	140/5,51
A2	88/3,47	142/5,59	196/7,72	250/9,84
B1	135/5,32	135/5,32	135/5,32	135/5,32
B2	106/4,17	160/4,17	214/8,43	268/10,55
C1	104/4,09	104/4,09	104/4,09	104/4,09
C2	124/4,88	178/7,01	232/9,13	286/11,27

M00019/OT400U01_04 E

Dimension drawings
Front operated switch-disconnectors

OT600U_P

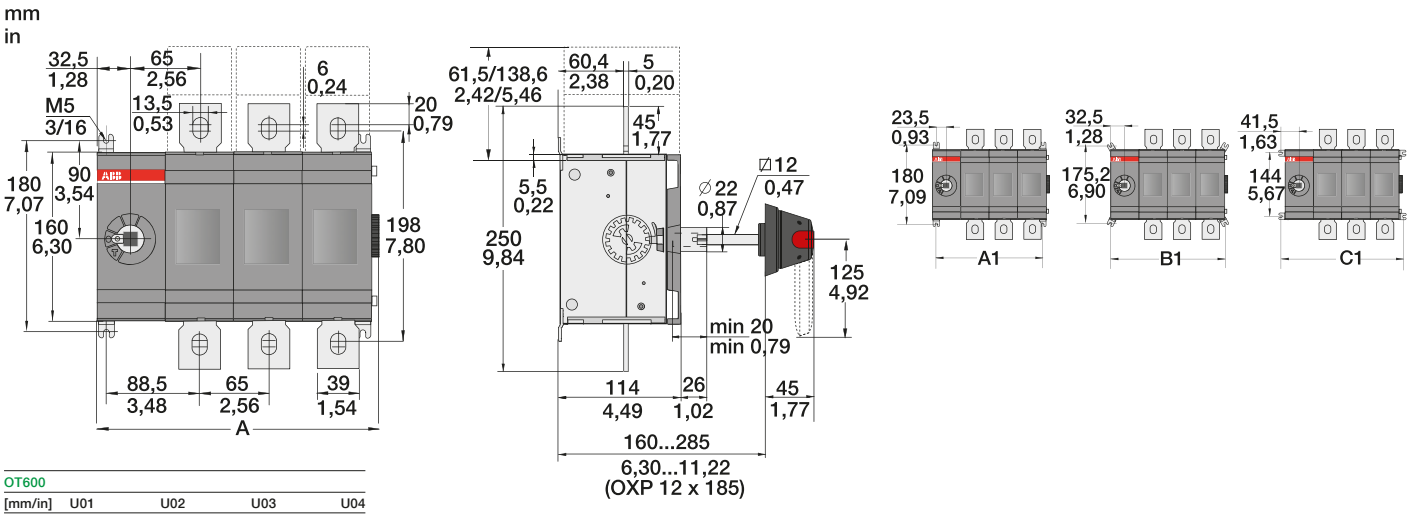

C00013_/13OT630_800_01_04 B

OT600

[mm/in]	U01	U02	U03	U04
A	136/5,35	201/7,91	266/10,47	331/13,03
A1	112/4,41	177/6,97	242/9,53	307/12,09
B1	130/5,12	195/7,68	260/10,24	325/12,80
C1	148/5,83	213/8,39	278/10,95	343/13,50

Remark: Dimension drawings for types OT800U_P...OT1200U_P, see page 83

OETL-NF1600P and OETL-NF2000P

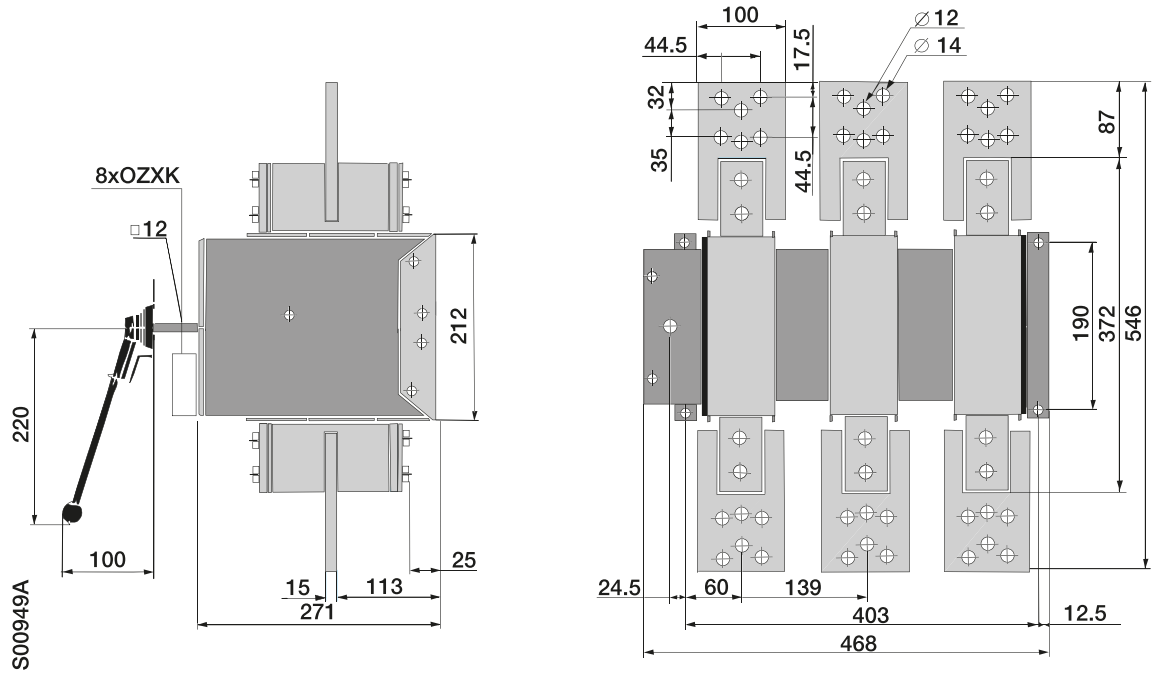

Dimension drawings
Side operated switch-disconnectors

OT160EVS, OT200ES_ and OT250ES_

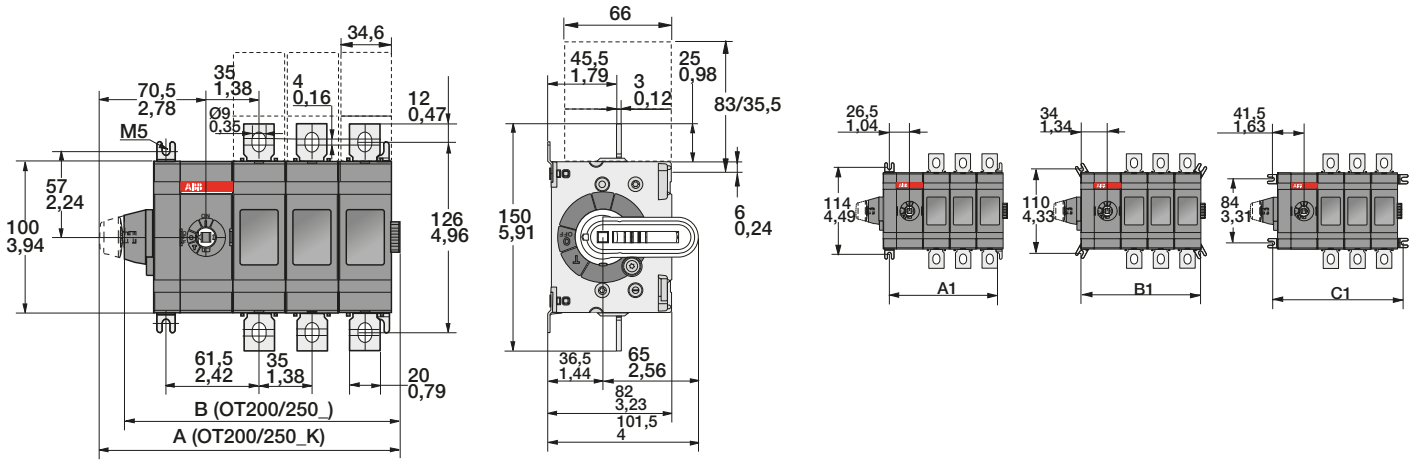

M00144/OT200-250ES01_-04_ A

OT160EV_/200E_/250E_, OT160EV_/200E/250E_K

[mm/in]	ES01	ES02	ES03	ES04
A	128,5/5,06	163,5/6,44	198,5/7,82	233,5/9,2
B	111,5/4,39	146,5/5,77	181,5/7,15	216,5/8,53
A1	71,5/2,81	106,5/4,2	141,5/5,57	176,5/6,95
B1	86,5/3,41	121,5/4,79	156,5/6,16	191,5/7,54
C1	101,5/4	136,5/5,38	171,5/6,75	206,5/8,14

OT315ES_ and OT400ES_

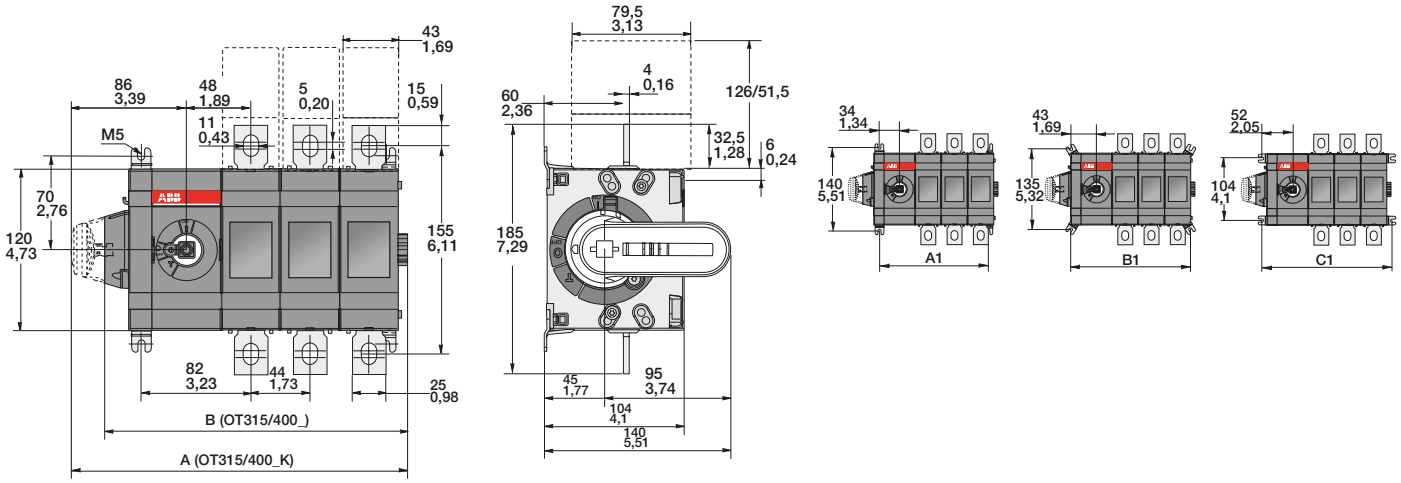

M00145/OT315-400ES01_-04_ A

OT315/400_, OT315/400_K

[mm/in]	ES01	ES02	ES03	ES04
A	163/6,42	207/8,16	251/9,89	295/11,62
B	138/5,44	182/7,17	226/8,9	270/10,64
A1	95/3,74	139/5,48	183/7,21	227/8,94
B1	113/4,45	157/6,18	201/7,92	245/9,65
C1	131/5,16	175/6,89	219/8,63	263/10,36

Dimension drawings
Side operated switch-disconnectors

OT630ES_ and OT800ES_

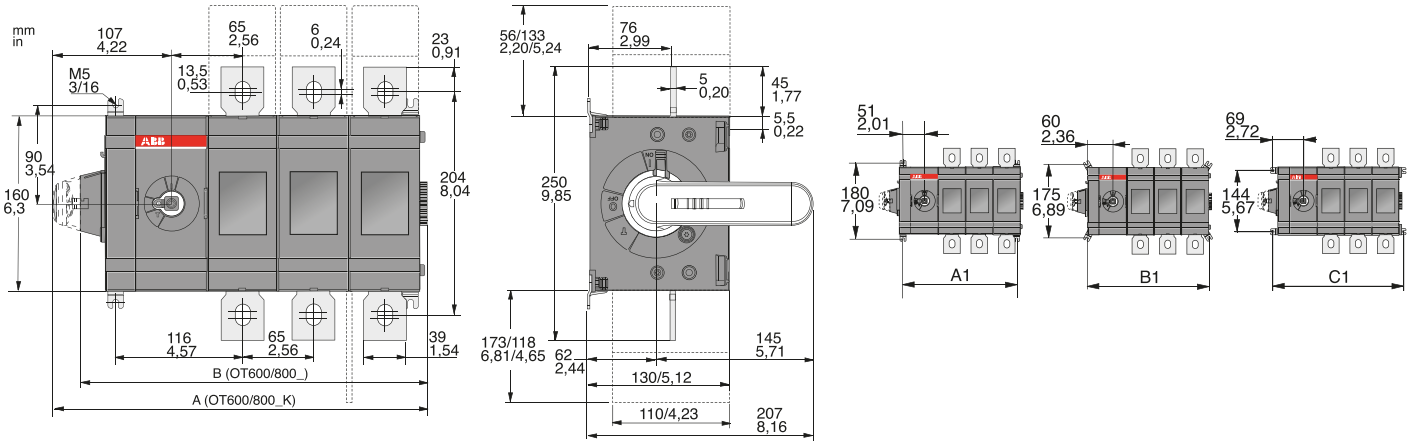

M00147/OT600-800ES01_04 C

OT600/630/800_, OT600/630/800_K

[mm/in]	ES01/US01	ES02/US02	ES03/US03	ES04/US04
A	211/8,31	276/10,87	341/13,43	406/16
B	186/7,33	251/9,89	316/12,45	381/15,01
A1	140/5,51	205/8,08	270/10,64	335/13,2
B1	158/6,22	223/8,79	288/11,34	353/13,91
C1	176/6,93	241/9,49	306/12,06	371/14,62

Dimension drawings
Earthing switches

OT1000...1600EM_

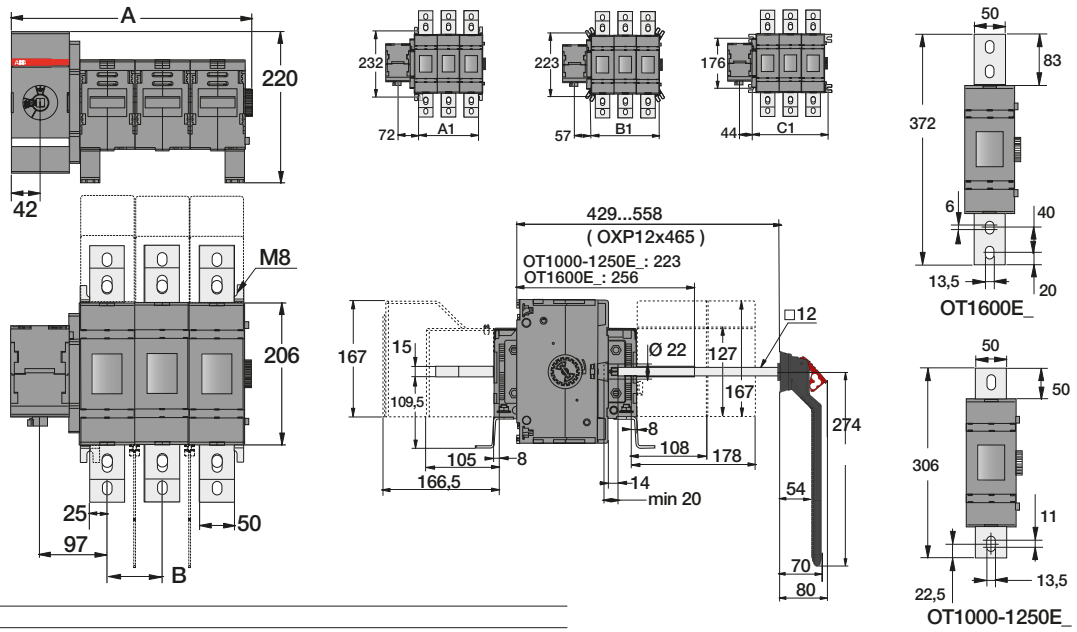

M07012/M00348/OT1600EM03 B

OT1000/1250/1600EM_

[mm/in]	01	02	03	04	03W4	04W4	03W8	04W8
A	189,5/7,46	269,5/10,61	349,5/13,76	429,5/16,91	469,5/18,48	609,5/24,00	559,5/22,03	744,5/29,31
B		80/3,15	80/3,15	80/3,15	140/5,51	140/5,51	185/7,28	185/7,28
A1	50/1,97	130/5,12	210/8,27	290/11,42	330/12,99	470/18,50	420/16,54	605/23,82
B1	80/3,15	160/6,30	240/9,45	320/12,60	360/14,17	500/19,69	450/17,72	635/25,00
C1	106/4,17	186/7,32	266/10,47	346/13,62	386/15,20	526/20,71	476/18,74	661/26,02

OT2000...2500EM_

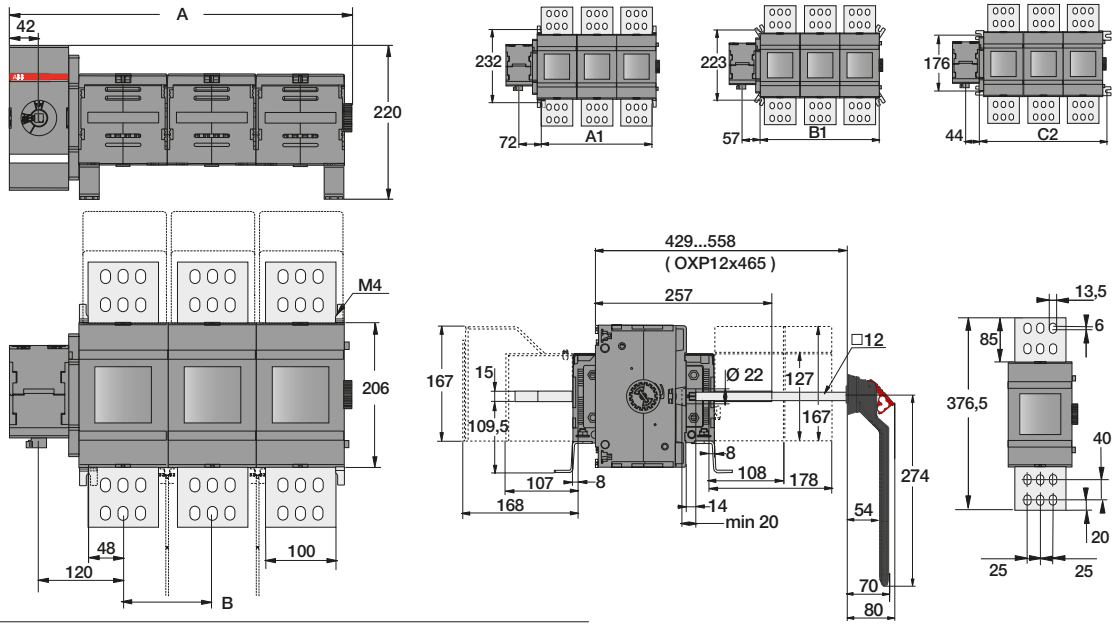

M07013/M00349/OT2500EM03

OT2000/2500EM_

[mm/in]	01	02	03	04	03W4	04W4	03W8	04W8
A	235,5/9,27	361,5/14,23	487,5/19,19	613,5/24,15	515,5/20,30	655,5/25,81	605,5/23,84	790,5/31,12
B		126/4,96	126/4,96	126/4,96	140/5,51	140/5,51	185/7,28	185/7,28
A1	96/3,78	222/8,74	348/13,70	474/18,66	376/14,80	516/20,31	466/18,35	651/25,63
B1	126/4,96	252/9,92	378/14,88	504/19,84	406/15,98	546/21,50	496/19,53	681/26,81
C1	152/5,98	278/10,94	404/15,91	530/20,87	432/17,01	572/22,52	522/20,55	707/27,83

Dimension drawings
Earthing switches

OT1000...1600EP_

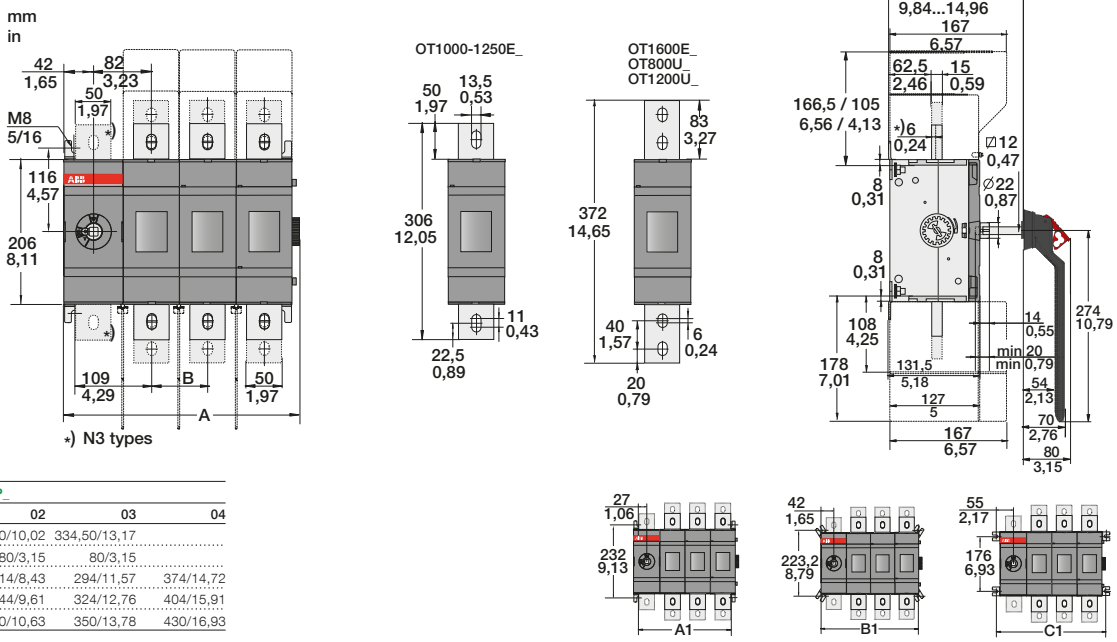

M07010_OT1000_1600EP A

OT1000/1250/1600EP_				
[mm/in]	01	02	03	04
A	174,50/6,87	254,50/10,02	334,50/13,17	
B		80/3,15	80/3,15	
A1	134/5,28	214/8,43	294/11,57	374/14,72
B1	164/6,46	244/9,61	324/12,76	404/15,91
C1	190/7,48	270/10,63	350/13,78	430/16,93

OT2000...2500EP_

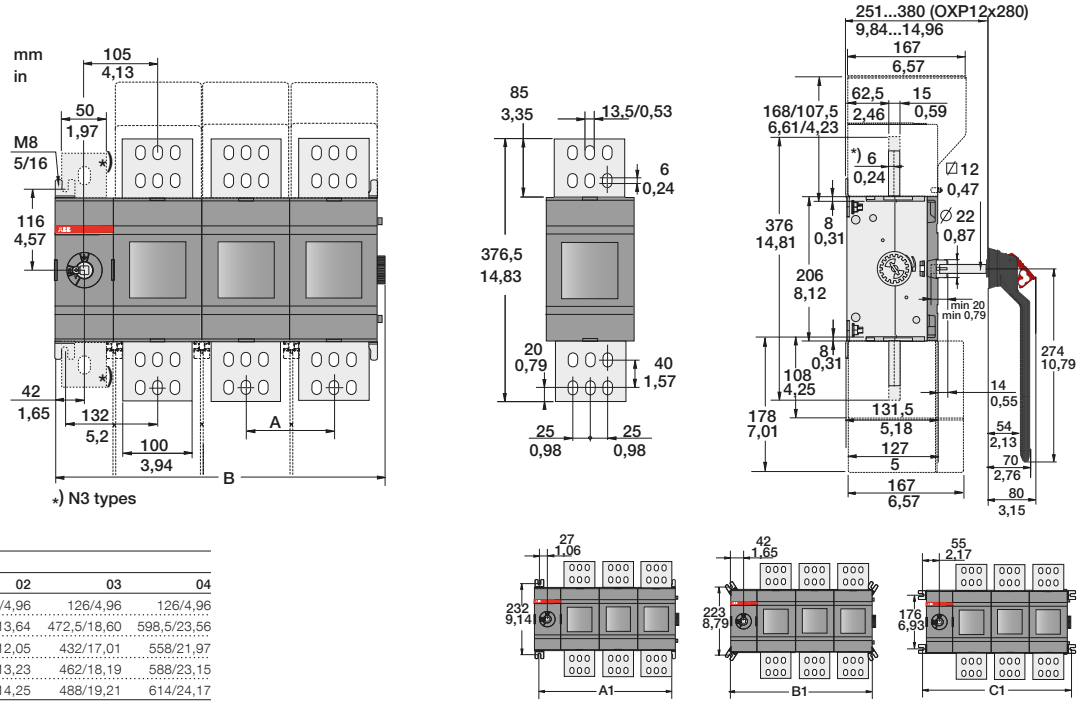

M07011_OT2000_2500EP A

OT2000/2500EP_				
[mm/in]	01	02	03	04
A		126/4,96	126/4,96	126/4,96
B	220,5/8,68	346,5/13,64	472,5/18,60	598,5/23,56
A1	180/7,09	306/12,05	432/17,01	558/21,97
B1	210/8,27	336/13,23	462/18,19	588/23,15
C1	236/9,29	362/14,25	488/19,21	614/24,17

Dimension drawings
Motorized switch-disconnectors

OTM160...250E_M

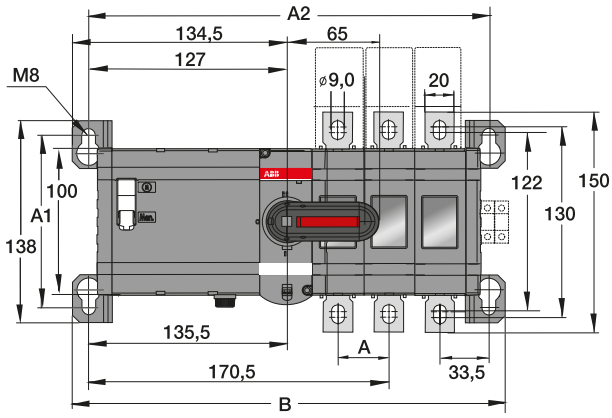

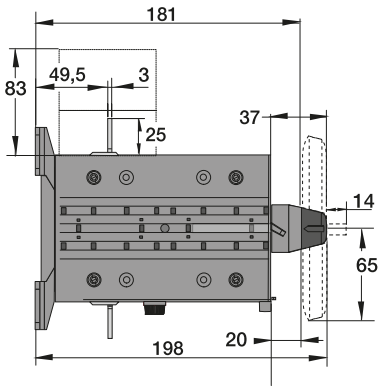

M00276/OTM160-250E2_4 B

OTM160-250_M			
[mm]	E2	E3	E4
A	35	35	35
A1	118	118	118
A2	239	274	309
B	261	296	331

OTM160...250E_WM

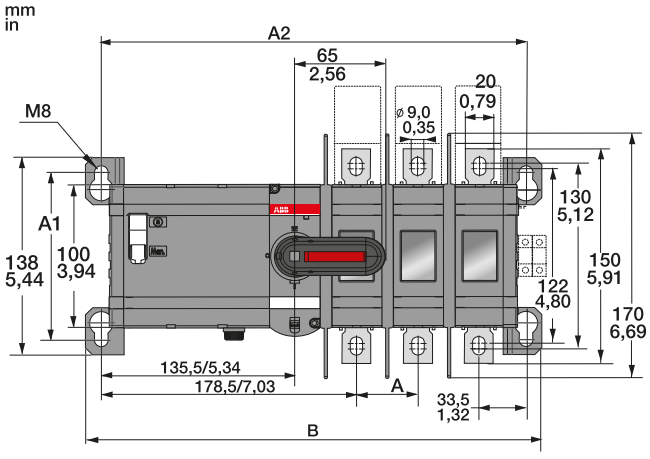

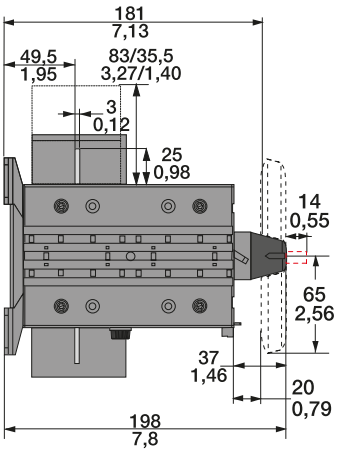

M07014/OTM160...250E_WM2_4

OTM160-250_M			
[mm/in]	E2W	E3W	E4W
A	43/1,69	43/1,69	43/1,69
A1	118/4,65	118/4,65	118/4,65
A2	255/10,05	298/11,74	341/13,43
B	277/10,91	320/12,61	363/14,3

Dimension drawings
Motorized switch-disconnectors

OTM315...400E_M

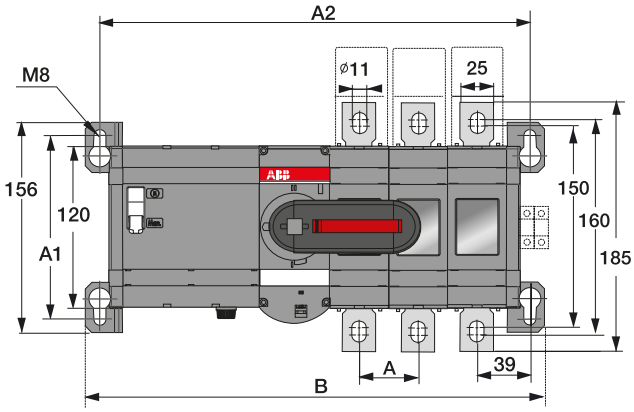

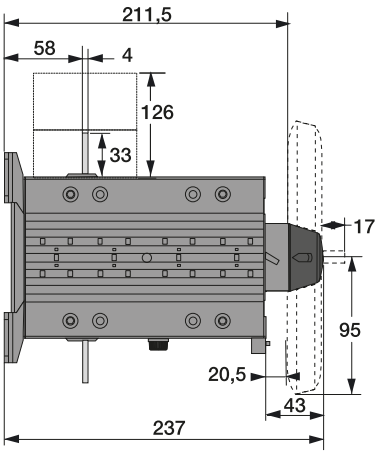

M00278/OTM315-400E2_4 B

OTM315-400_M

[mm]	E2	E3	E4
A	44	44	44
A1	136	136	136
A2	276	320	364
B	298	342	386

OTM630...800E_M

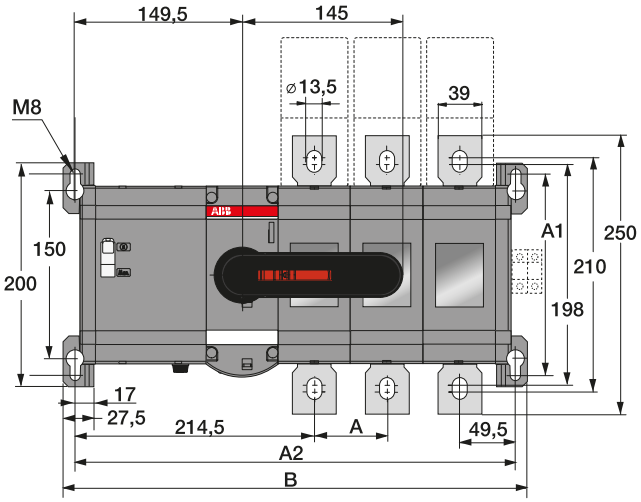

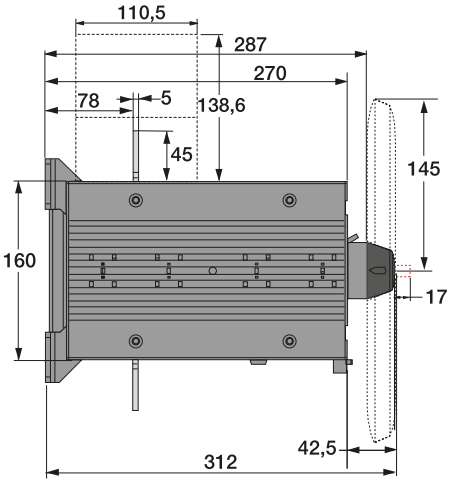

M00281/OTM630-800E2_4 B

OTM630-800_M

[mm]	E2	E3	E4
A	65	65	65
A1	180	180	180
A2	329	394	459
B	350	415	480

Dimension drawings
Motorized switch-disconnectors

OTM1000...1250E_M

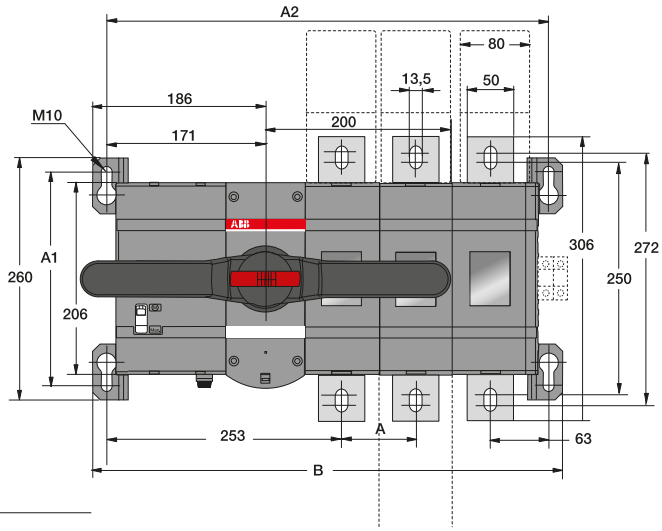

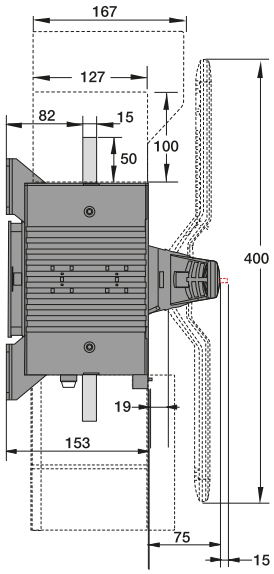

M00282/OTM1000-1250E_M B

OTM1000-1250_M

[mm]	E2	E3	E4
A	80	80	80
A1	230	230	230
A2	396,5	476,5	556,5
B	426,5	506,5	586,5

OTM1600E_M

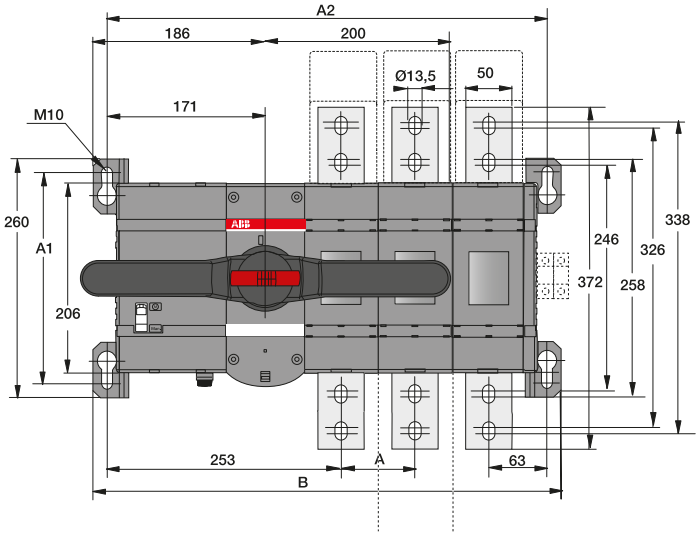

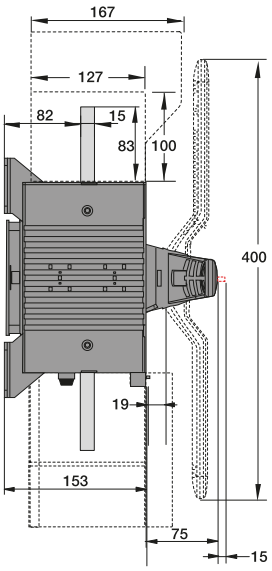

M00283/OTM1600E_M B

OTM1600_M

[mm]	E2	E3	E4
A	80	80	80
A1	230	230	230
A2	396,5	476,5	556,5
B	426,5	506,5	586,5

Dimension drawings
Motorized switch-disconnectors

OTM2000...2500E_M

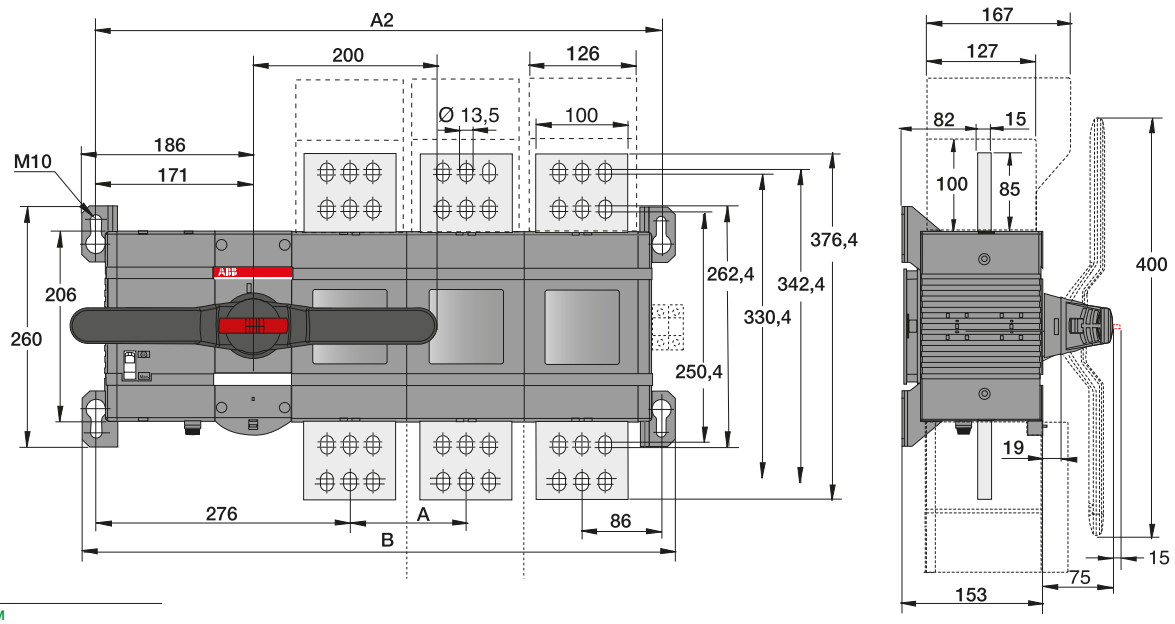

M00285/OTM2000_2500E_M B

OTM2000-2500_M			
[mm]	E2	E3	E4
A	126	126	126
A1	230	230	230
A2	488,5	614,5	740,5
B	518,5	644,5	770,5

Dimension drawings
Handles

Handles for base and DIN-rail mounted switches

OH_S1A_, OH_S3A_

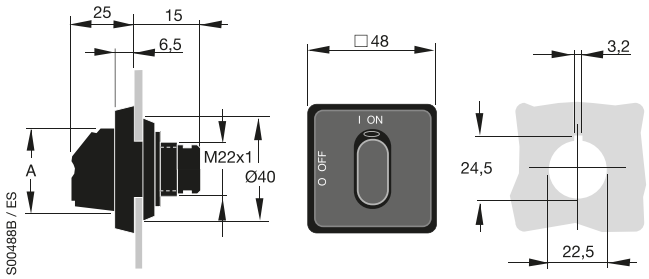

	OH_S1A_ [mm]	OH_S3A_ [mm]
A	31,5	37,5

OH_S2A_

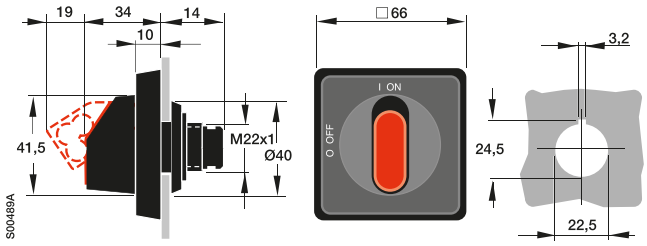

Handles for door mounted switches (snap-on mounting)

OH_S1P_, OH_S3P_

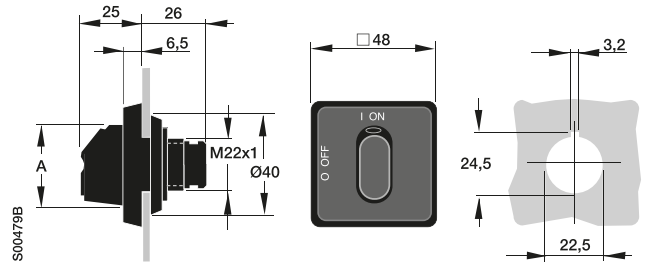

	OH_S1P_ [mm]	OH_S3P_ [mm]
A	31,5	37,5

OH_S2P_

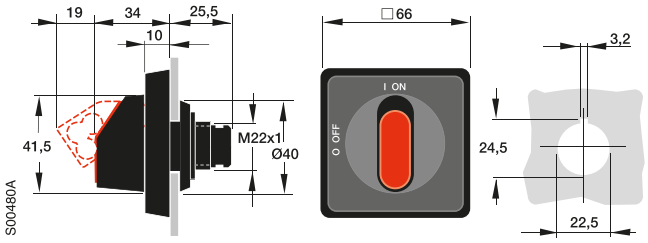

Handles for door mounted switches (screw-mounting)

OH_S1R_, OH_S3R_

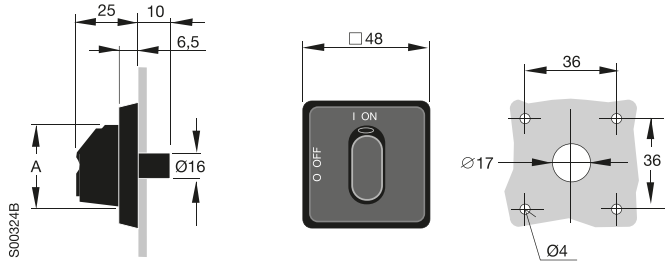

	OH_S1R_ [mm]	OH_S3R_ [mm]
A	31,5	37,5

OH_S2R_

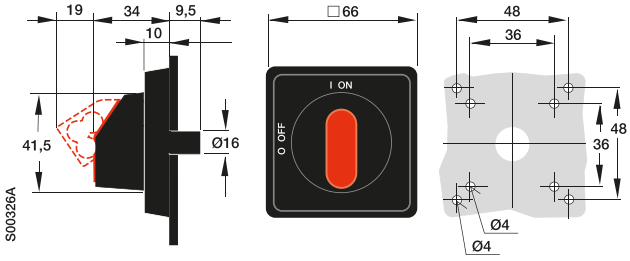

Dimension drawings
Handles

Handle knobs

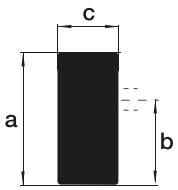

Handle type	A	B	C
OHBS1, OHRS1	31	16	14
OHBS2, OHRS2	40	25	13
OHBS3, OHRS3	39	23	18
OHBS9, OHRS9	72	55	16

Round padlockable handle OZ331P_ and OZ371P_

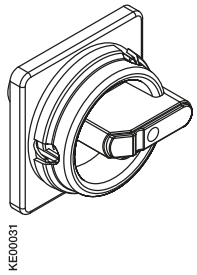

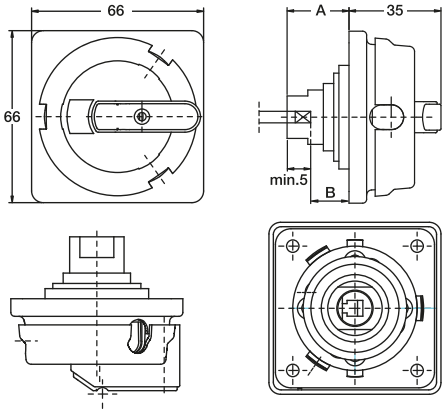

Shaft size 6 mm

Handle type	OZ331P_	OZ371_
	[mm]	[mm]
A	24	21
B	3-10	4-5

Plastic handles

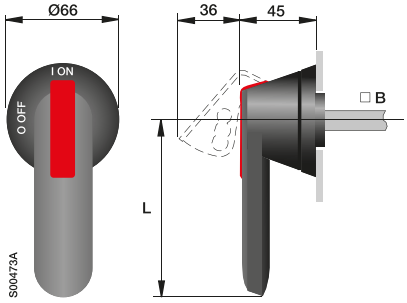

Door drilling for OH_ handles:

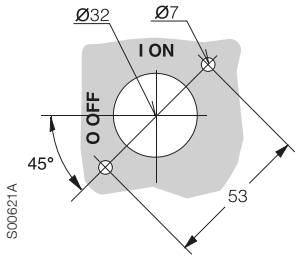

Handle type	Shaft diameter B	Length L
	[mm]	[mm]
OH_45J6	6	45
OH_65J6	6	65
OH_80J6	6	80
OH_95J12	12	95
OH_125J12	12	125
OH_145J12	12	145
OH_175J12	12	175
OH_275J12	12	275

Dimension drawings
Handles

Plastic handles

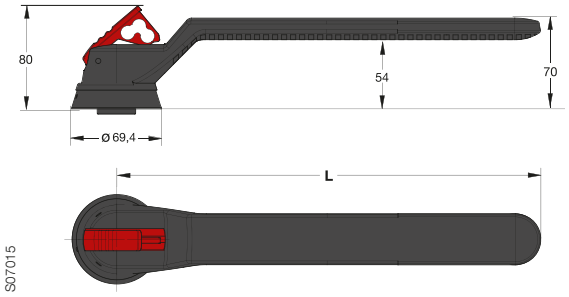

S07015

Handle type	Length L [mm]
OH_274J12	274
OH_330J12	330

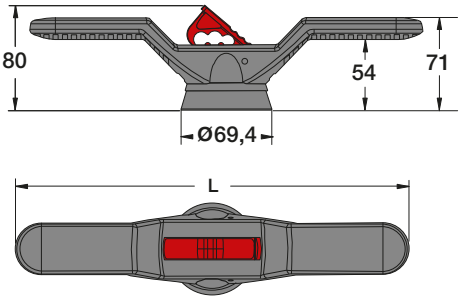

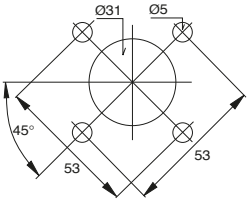

M00134

Handle type	Length L [mm]
OHB150J12P	300
OHB200J12P	400

Stainless steel handles

OHM_

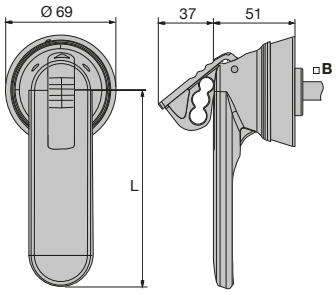

M00133/13OHM45-275L-A/KE00020

Door drilling for OHM_

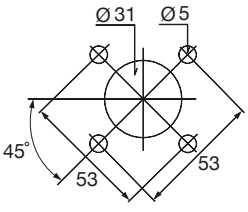

Handle type	Shaft diameter B [mm]	Lenght L [mm]
OHM65L6	6	65
OHM125L12	12	125
OHM175L12	12	175
OHM275L12	12	275

Dimension drawings
Handles, legend plate

Minimum distance L between the hinge and the rotating shaft

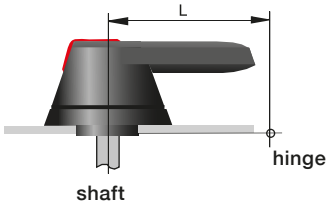

S00374C

Sizes [A]	Length L [mm]	Handle type
OT16...125	75	OH_1, OH_2, OH_3
OT160...250_P	60	OH_65J_
OT315...400_P	95	OH_95J_
OT630...800_P	150	OH_125J_
OT1000...2500_P	274	OH_274J_
OT1000...2500_P	330	OH_330J_
OETL3150	220	YASDA7, 8
OETL3150	275	OH_275J12

Legend plate for pistol handles, OPB3, OPY3 and OPX3

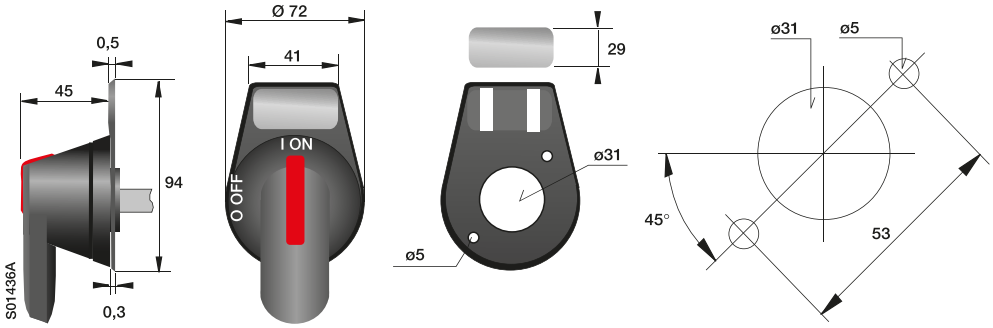

Metallic handles

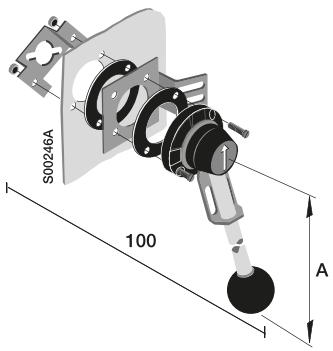

Door drilling for YASDA_ :

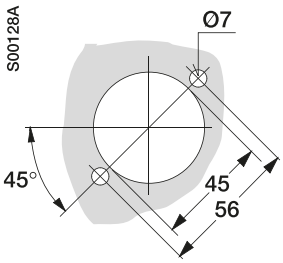

YASDA_			
[mm]	YASDA6, 35	YASDA7, 8, 21	YASDA24
A	320	220	145

Dimension drawings
Handles, interlocks, motor operator, connection busbars

OTV1000EK

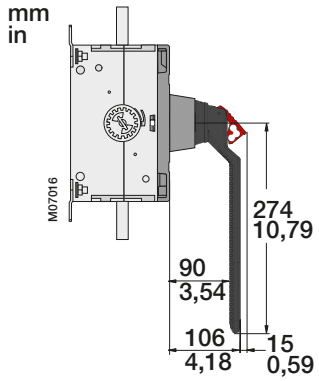

Electrical and mechanical interlock OTZT_

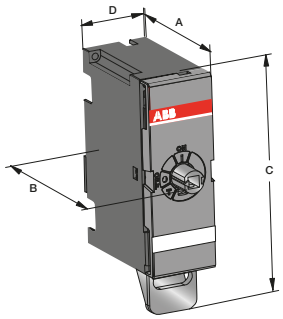

OTZT_

[mm]	OTZT1_	OTZT2_	OTZT3_	OTZT4_
A	69	81	86	88
B	82	102	110	110
C	122	152	201	258
D	35	52	65	84

Motor operator OEMO

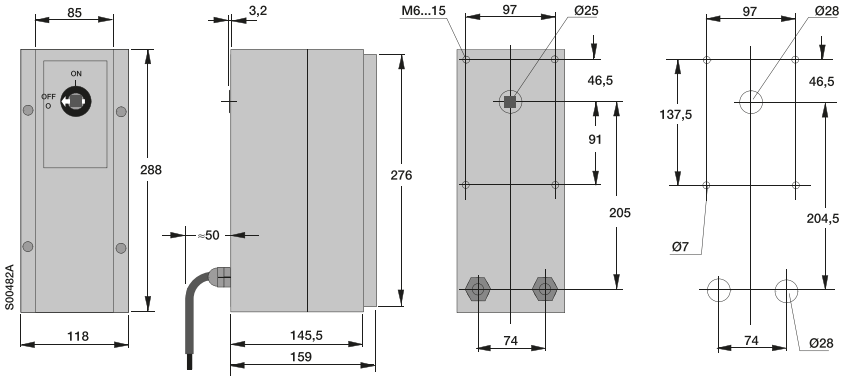

Connection busbars for OETL3150

OETLZX114, 114/1

Alternative 1: vertical/back mounting

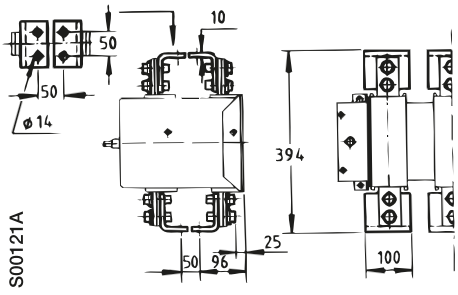

OETLZX114, 114/1

Alternative 2: edgewise mounting

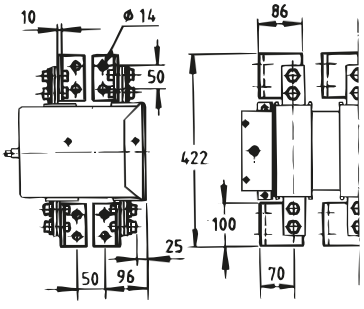

OETLZX115, 115/1

Alternative 3: vertical mounting

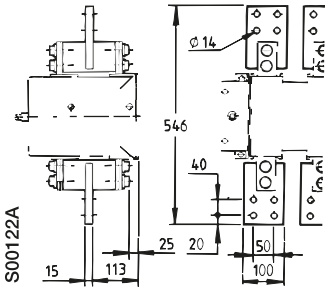

Dimension drawings
Conversion kits

6 and 8-pole switch fuses

OESAZW2

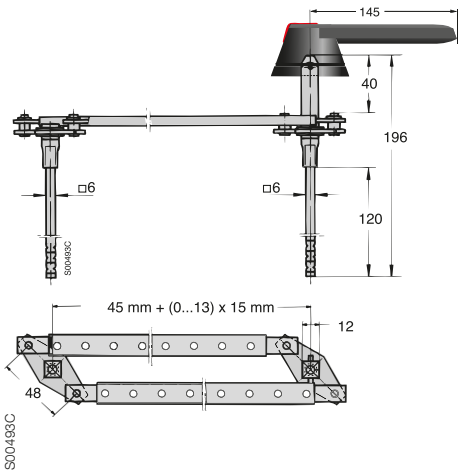

OTZW8

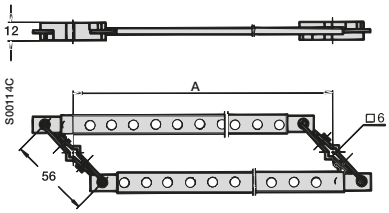

[mm]	A (min)
OT16...40F	45+(0...12)x15
OT63...80F	60+(0...11)x15
OT100...125F	75+(0...10)x15

OETLZW9

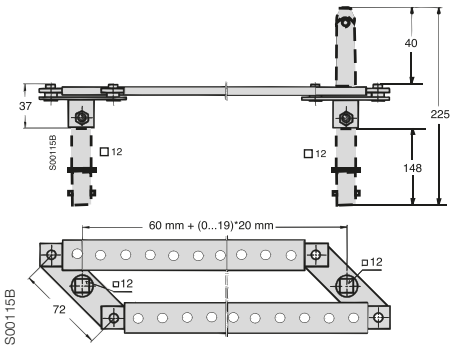

Mechanical interlock

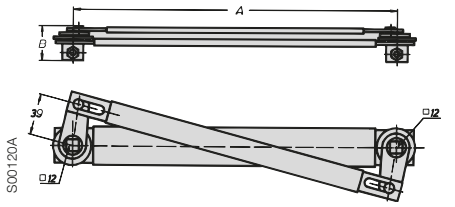

OETLZW3, 14, 15

	OETLZW3	OETLZW14	OETLZW15
A	300	250	500
B	31	31	36

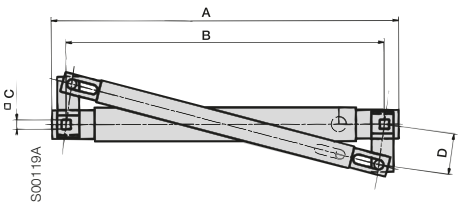

OTZW10, 24

	OTZW10	OTZW24
A	206	114
B	190	100
C	6	6
D	30	15

Dimension drawings
Conversion kits

Change-over and by-pass switch fuses

OESAZW1

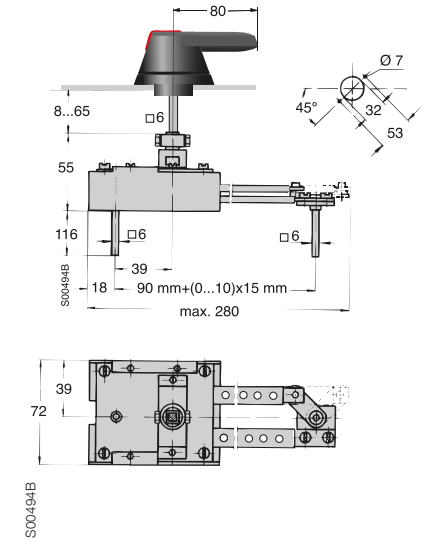

OTZW25

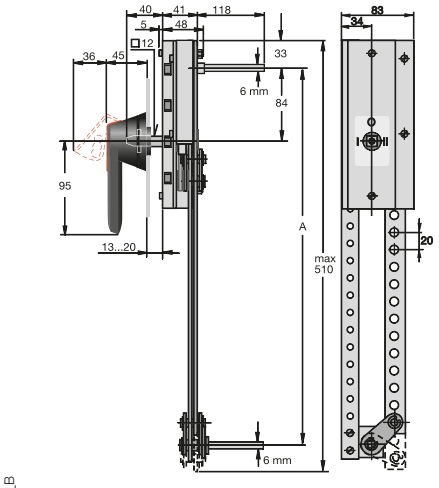

OTZW25

A	210+(0...18)x20mm

OETLZW11

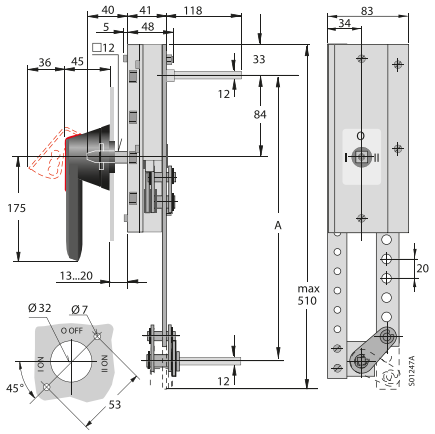

OETLZW11

A	210+(0...11)x20 mm

OTZW17

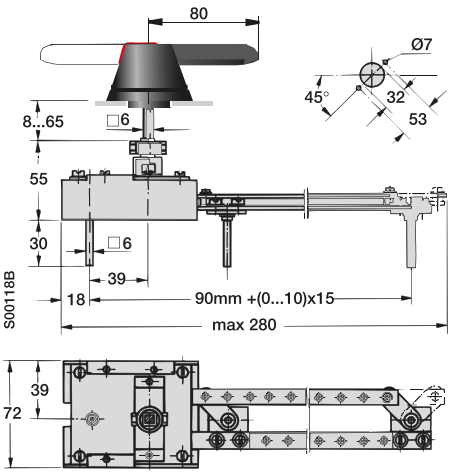

OTZW26

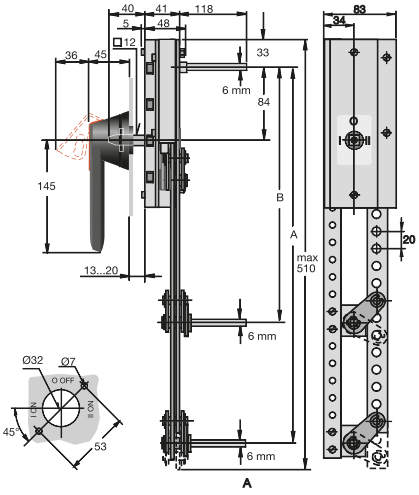

OTZW26

A	210+(0...9)x20mm
B	210+(0...9)x20mm

OETLZW12, 13

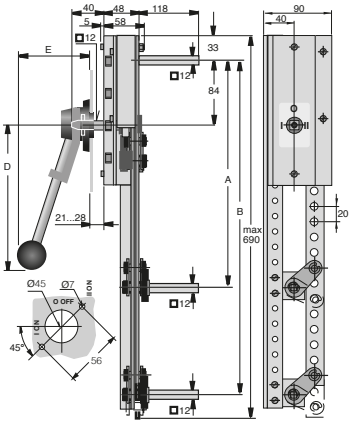

OETLZW12, 13

	OETLZW12	OETLZW13
A	210+(0...18)x20 mm	210+(0...18)x20 mm
B		250+(0...18)x20 mm
D	220 mm	320 mm
E	95 mm	138 mm

Contact functions
Handle indications

Handle indications and functions

– The handle indicates the position of the contacts with complete reliability in all situations. If the contacts are welded together, the handle does not reach the OFF-position but remains between ON and OFF, maintaining the door interlock and preventing padlocking.
– When operating the switch fuse to the Test-position with a test handle the test auxiliary contacts change position. The main contacts remain open.

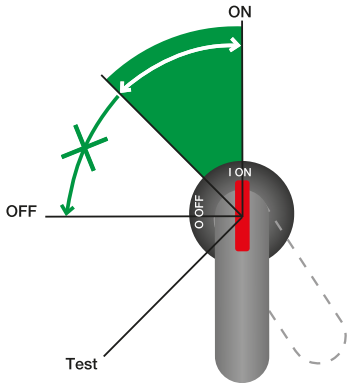

ON and OFF-functions of main and auxiliary contacts

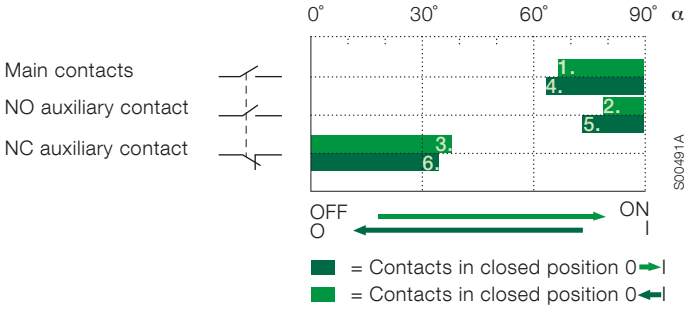

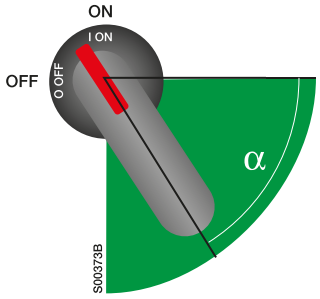

Closing: 1. Main contacts close 2. NO auxiliary contacts close 3. NC auxiliary contacts open
Opening: 4. Main contacts open 5. NO auxiliary contacts open 6. NC auxiliary contacts close

ON and OFF-functions of main and auxiliary contacts OT16...125

OT16...40

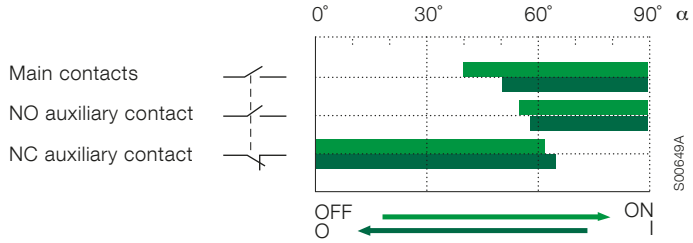

OA1G10, OA1G01

Auxiliary contact	Contact configuration
OA1G10	1NO
OA1G01	1NC

OT63...125

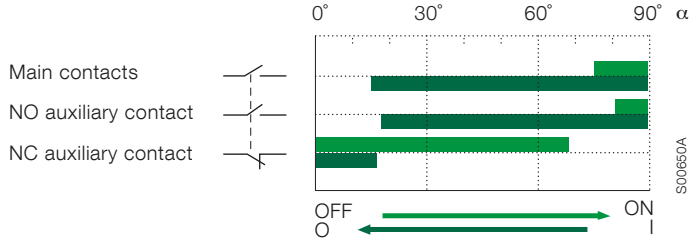

OA1G10, OA1G01

Contact functions

ON and OFF-functions of main and auxiliary contacts OT160EV...2500

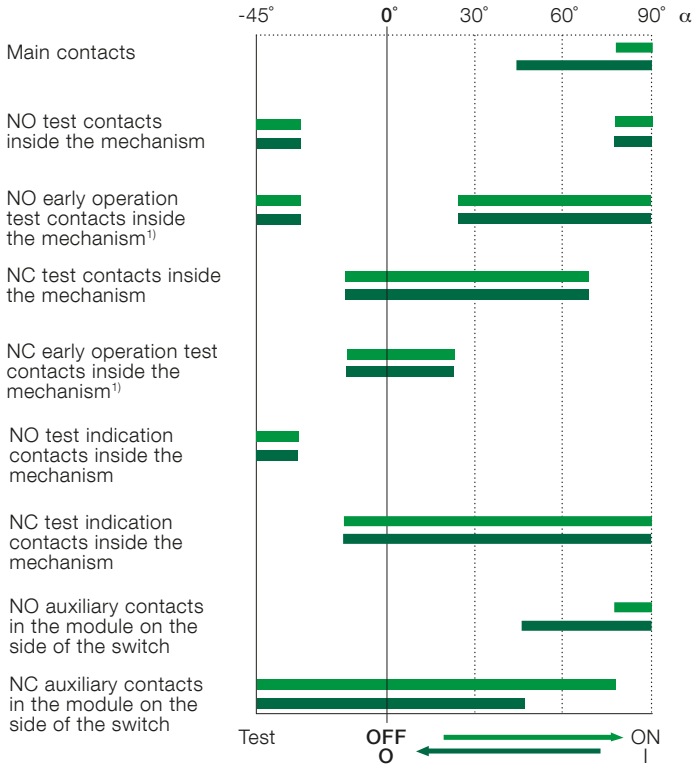

Contact	Contact configuration
OA1G10	1NO
OA3G01	1NC

1) OT1000...2500 only

ON and OFF-functions of main and auxiliary contacts OETL3150

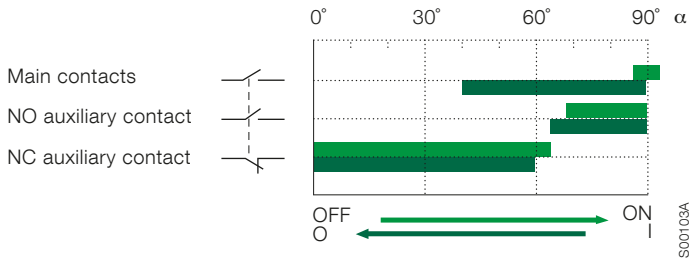

Auxiliary contact	Contact configuration
OZXK1	1NO+1NC
OZXK2	2NO+2NC
OZXK3	4NO+4NC
OZXK4	2NO
OZXK5	4NO
OZXK6	8NO

Index

Type	Order number	Description	Page
-	1SDA062127R1	Cable set for mechanical interlock	70
OA1G01	1SCA022353R4890	Auxiliary contact block	54
OA1G01AU	1SCA022436R7830	Auxiliary contact block	54
OA1G10	1SCA022353R4970	Auxiliary contact block	54
OA1G10	1SCA022353R4970	Auxiliary contact block	55
OA1G10	1SCA022353R4970	Auxiliary contact block	56
OA1G10AU	1SCA022436R7910	Auxiliary contact block	54
OA1G10AU	1SCA022436R7910	Auxiliary contact block	55
OA1G10AU	1SCA022436R7910	Auxiliary contact block	56
OA2G11	1SCA022379R8100	Auxiliary contact block	54
OA3G01	1SCA022456R7410	Auxiliary contact block	55
OA3G01	1SCA022456R7410	Auxiliary contact block	56
OA3G01AU	1SCA022819R5260	Auxiliary contact block	55
OA3G01AU	1SCA022819R5260	Auxiliary contact block	56
OEA28	1SCA022714R8810	Module for auxiliary contact	57
OEMO004/110VAC	1SCA022182R0300	Motor operator	69
OEMO004/230VAC	1SCA022196R9010	Motor operator	69
OESAZW1	1SCA022064R3710	Conversion kit	66
OESAZW2	1SCA022078R1600	Conversion kit	66
OESAZX160	1SCA022186R3960	Neutral link	59
OESAZX162	1SCA022193R0400	Neutral link	59
OESAZX164	1SCA022202R9520	Neutral link	59
OESAZX165	1SCA022202R9790	Neutral link	59
OESAZX167	1SCA022190R1560	Shaft extension socket	53
OETL-NF1600P	1SCA022282R0690	Non-fusible disconnect switch	29
OETL-NF2000P	1SCA022282R0850	Non-fusible disconnect switch	29
OETL3150K185	1SCA022136R7550	Switch-disconnector	24
OETL3150K3	1SCA022115R6340	Switch-disconnector	24
OETL3150K3-2	1SCA022157R4260	Switch-disconnector	24
OETL3150K3-H20	1SCA022163R8090	Switch-disconnector	24
OETL3150K4	1SCA022115R6510	Switch-disconnector	24
OETL3150KV12	1SCA022290R3390	Switch-disconnector	24
OETL3150KV22	1SCA022293R8260	Switch-disconnector	24
OETLZK19	1SCA022093R1850	Adapter for extension socket	53
OETLZT80A110AC	1SCA022080R9460	Electrical interlock	72
OETLZT80A110DC	1SCA022081R0210	Electrical interlock	72
OETLZT80A220AC	1SCA022079R9050	Electrical interlock	72
OETLZT80A220DC	1SCA022080R9890	Electrical interlock	72
OETLZT80A240AC	1SCA022384R3330	Electrical interlock	72
OETLZT80A24DC	1SCA022081R1440	Electrical interlock	72
OETLZT80A48DC	1SCA022081R1010	Electrical interlock	72
OETLZT80A60DC	1SCA022081R0630	Electrical interlock	72
OETLZT80L110AC	1SCA022080R9200	Electrical interlock	72
OETLZT80L110DC	1SCA022081R0040	Electrical interlock	72
OETLZT80L220AC	1SCA022079R9640	Electrical interlock	72
OETLZT80L220DC	1SCA022080R9620	Electrical interlock	72
OETLZT80L230AC	1SCA022375R0240	Electrical interlock	72
OETLZT80L240AC	1SCA022496R2040	Electrical interlock	72
OETLZT80L24DC	1SCA022081R1280	Electrical interlock	72
OETLZT80L48DC	1SCA022081R0800	Electrical interlock	72
OETLZT80L60DC	1SCA022081R0470	Electrical interlock	72
OETLZW11	1SCA022078R0030	Conversion kit	66
OETLZW12	1SCA022078R0200	Conversion kit	66
OETLZW13	1SCA022078R0460	Conversion kit	67
OETLZW14	1SCA022077R3410	Conversion kit	67
OETLZW15	1SCA022081R9340	Conversion kit	67
OETLZW16	1SCA022093R2070	Locking accessory	69
OETLZW3	1SCA022049R0380	Conversion kit	67
OETLZW5	1SCA022052R3900	Locking accessory	69
OETLZW9	1SCA022061R3300	Conversion kit	66
OETLZX108	1SCA022087R8430	90° angle kit	69
OETLZX114	1SCA022117R7510	Busbar connection	65
OETLZX114/1	1SCA022126R1990	Busbar connection	65
OETLZX115	1SCA022117R7770	Busbar connection	65
OETLZX115/1	1SCA022126R2110	Busbar connection	65
OETLZX58	1SCA022068R8220	Shaft support	53
OETLZX71	1SCA022068R2700	Handle support bracket	49
OETLZX95	1SCA022083R5620	Shaft extension socket	53
OHB125J12	1SCA022381R1560	Handle	44
OHB125J12T	1SCA022652R2220	Handle	45
OHB145J12	1SCA022381R2110	Handle	44
OHB145J12E00S	1SCA022679R9700	Handle	47
OHB145J12T	1SCA022652R2570	Handle	45
OHB150J12P	1SCA022865R9430	Handle	44
OHB175J12T	1SCA022708R0740	Handle	45
OHB200J12P	1SCA022865R9510	Handle	44
OHB200J12PT	1SCA106510R1001	Handle	45
OHB274J12	1SCA115920R1001	Handle	44
OHB274J12T	1SCA120250R1001	Handle	45
OHB275J12	1SCA022381R2960	Handle	44
OHB275J12E011	1SCA022460R7220	Handle	45
OHB330J12	1SCA115922R1001	Handle	44
OHB330J12T	1SCA120252R1001	Handle	45
OHB45J6	1SCA022380R8770	Handle	44
OHB65J6	1SCA022380R9660	Handle	44
OHB65J6E00S	1SCA022382R9850	Handle	47
OHB65J6T	1SCA022399R8110	Handle	44
OHB65J6TE00S	1SCA109016R1001	Handle	47
OHB80J6	1SCA022381R0240	Handle	44
OHB95J12	1SCA022381R0830	Handle	44
OHB95J12T	1SCA022736R1750	Handle	45
OHBS1	1SCA109087R1001	Handle knob	40
OHBS1/1	1SCA109088R1001	Handle knob	40
OHBS12	1SCA108252R1001	Handle knob	40
OHBS1AH	1SCA102680R1001	Handle	41
OHBS1AH1	1SCA105210R1001	Handle	41
OHBS1PH	1SCA105211R1001	Handle	42
OHBS1RH	1SCA105212R1001	Handle	42
OHBS2	1SCA109089R1001	Handle knob	40
OHBS2/1	1SCA109090R1001	Handle knob	40
OHBS2AJ	1SCA105213R1001	Handle	41
OHBS2AJ1	1SCA105215R1001	Handle	41
OHBS2PJ	1SCA105231R1001	Handle	42
OHBS2RJ	1SCA105232R1001	Handle	42
OHBS3	1SCA108320R1001	Handle knob	40
OHBS3/1	1SCA108319R1001	Handle knob	40
OHBS3AH	1SCA105234R1001	Handle	41
OHBS3AH1	1SCA105235R1001	Handle	41
OHBS3PH	1SCA105236R1001	Handle	42
OHBS3RH	1SCA105237R1001	Handle	42
OHBS9	1SCA108665R1001	Handle knob	40
OHBS9/1	1SCA108689R1001	Handle knob	40
OHG125J12	1SCA022381R1640	Handle	44
OHG145J12	1SCA022381R2290	Handle	44
OHG275J12	1SCA022381R3000	Handle	44
OHG275J12E011	1SCA022460R7490	Handle	45

Type	Order number	Description	Page
OHG45J6	1SCA022380R8850	Handle	44
OHG65J6	1SCA022380R9740	Handle	44
OHG65J6E00S	1SCA022383R4510	Handle	47
OHG65J6TE00S	1SCA109014R1001	Handle	47
OHG80J6	1SCA022381R0320	Handle	44
OHG95J12	1SCA022381R0910	Handle	44
OHGS1AH	1SCA105261R1001	Handle	41
OHGS1AH1	1SCA105262R1001	Handle	41
OHGS1PH	1SCA105263R1001	Handle	42
OHGS1RH	1SCA105264R1001	Handle	42
OHGS2AJ	1SCA105265R1001	Handle	41
OHGS2AJ1	1SCA105266R1001	Handle	41
OHGS2PJ	1SCA105268R1001	Handle	42
OHGS2RJ	1SCA105269R1001	Handle	42
OHGS3AH	1SCA105270R1001	Handle	41
OHGS3AH1	1SCA105271R1001	Handle	41
OHGS3PH	1SCA105272R1001	Handle	42
OHGS3RH	1SCA105273R1001	Handle	42
OHM125L12	1SCA022739R1150	Handle	46
OHM175L12	1SCA022739R1230	Handle	46
OHM200L12P	1SCA104439R1001	Handle	46
OHM275L12	1SCA022832R4840	Handle	46
OHM65L6	1SCA022739R1070	Handle	46
OHRS1	1SCA109095R1001	Handle knob	40
OHRS1/1	1SCA109096R1001	Handle knob	40
OHRS12	1SCA108253R1001	Handle knob	40
OHRS2	1SCA108598R1001	Handle knob	40
OHRS2/1	1SCA108599R1001	Handle knob	40
OHRS3	1SCA108667R1001	Handle knob	40
OHRS3/1	1SCA108688R1001	Handle knob	40
OHRS9	1SCA108666R1001	Handle knob	40
OHRS9/1	1SCA108690R1001	Handle knob	40
OHSS1AH	1SCA105274R1001	Handle	41
OHSS1AH1	1SCA105275R1001	Handle	41
OHSS1PH	1SCA105276R1001	Handle	42
OHSS1RH	1SCA105277R1001	Handle	42
OHSS2AJ	1SCA105278R1001	Handle	41
OHSS2AJ1	1SCA105279R1001	Handle	41
OHSS2PJ	1SCA105280R1001	Handle	42
OHSS2RJ	1SCA105281R1001	Handle	42
OHSS3AH	1SCA105283R1001	Handle	41
OHSS3AH1	1SCA105284R1001	Handle	41
OHSS3PH	1SCA105285R1001	Handle	42
OHSS3RH	1SCA105286R1001	Handle	42
OHY125J12	1SCA022381R1720	Handle	44
OHY125J12T	1SCA022652R2310	Handle	45
OHY145J12	1SCA022381R2370	Handle	44
OHY145J12T	1SCA022652R2650	Handle	45
OHY150J12P	1SCA101586R1001	Handle	44
OHY175J12T	1SCA111508R1001	Handle	45
OHY200J12P	1SCA101587R1001	Handle	44
OHY200J12PT	1SCA111512R1001	Handle	45
OHY274J12	1SCA115919R1001	Handle	44
OHY275J12	1SCA022381R3180	Handle	44
OHY275J12E011	1SCA022460R7310	Handle	45
OHY330J12	1SCA115921R1001	Handle	44
OHY45J6	1SCA022380R8930	Handle	44
OHY65J6	1SCA022380R9820	Handle	44
OHY65J6E00S	1SCA022382R9930	Handle	47
OHY65J6T	1SCA022456R9540	Handle	44
OHY65J6TE00S	1SCA022688R0140	Handle	47
OHY80J6	1SCA022381R0410	Handle	44
OHY95J12	1SCA022381R1050	Handle	44
OHY95J12T	1SCA022736R1910	Handle	45
OHYS1AH	1SCA105290R1001	Handle	41
OHYS1AH1	1SCA105291R1001	Handle	41
OHYS1PH	1SCA105294R1001	Handle	42
OHYS1RH	1SCA105295R1001	Handle	42
OHYS2AJ	1SCA105296R1001	Handle	41
OHYS2AJ1	1SCA105297R1001	Handle	41
OHYS2PJ	1SCA105322R1001	Handle	42
OHYS2RJ	1SCA105323R1001	Handle	42
OHYS3AH	1SCA105325R1001	Handle	41
OHYS3AH1	1SCA105326R1001	Handle	41
OHYS3PH	1SCA105327R1001	Handle	42
OHYS3RH	1SCA105328R1001	Handle	42
OHZX10	1SCA022661R3610	Shaft alignment ring	53
OHZX11	1SCA022708R3170	Shaft alignment ring	53
OHZX14	1SCA022851R6590	Extension ring	53
OHZX4	1SCA022467R2470	Locking accessory	69
OHZX6	1SCA022559R5670	Handle mounting kit	42
OPB2	1SCA022353R4110	Legend plate	48
OPB2EN1	1SCA022400R2070	Legend plate	48
OPB3	1SCA022679R3410	Legend plate	48
OPBS1	1SCA111519R1001	Legend plate	48
OPBS1EN1	1SCA111520R1001	Legend plate	48
OPG2	1SCA022353R4380	Legend plate	48
OPG2EN1	1SCA022400R2310	Legend plate	48
OPGS1	1SCA111563R1001	Legend plate	48
OPGS1EN1	1SCA111526R1001	Legend plate	48
OPS2	1SCA022353R4460	Legend plate	48
OPS2EN1	1SCA022400R2230	Legend plate	48
OPSS1	1SCA111523R1001	Legend plate	48
OPSS1EN1	1SCA111525R1001	Legend plate	48
OPX3	1SCA022679R3500	Legend plate	48
OPX3/TEXT	1SCA022696R6370	Legend plate	48
OPX3DE1	1SCA022695R0700	Legend plate	48
OPX3EN1	1SCA022695R0610	Legend plate	48
OPX3FI1	1SCA022695R0530	Legend plate	48
OPX3SE1	1SCA022695R0880	Legend plate	48
OPY2	1SCA022353R4200	Legend plate	48
OPY2EN1	1SCA022400R2740	Legend plate	48
OPY3	1SCA022695R0450	Legend plate	48
OPYS1	1SCA111528R1001	Legend plate	48
OPYS1EN1	1SCA111530R1001	Legend plate	48
OT1000E03K	1SCA108353R1001	Switch-disconnector	25
OT1000E03N3P	1SCA100761R1001	Switch-disconnector	23
OT1000E03P	1SCA022860R5930	Switch-disconnector	23
OT1000E03W4P	1SCA022871R7310	Switch-disconnector	27
OT1000E03W8P	1SCA022871R8110	Switch-disconnector	27
OT1000E04K	1SCA108355R1001	Switch-disconnector	25
OT1000E04P	1SCA022860R6150	Switch-disconnector	23
OT1000E04W4P	1SCA100762R1001	Switch-disconnector	27
OT1000E12P	1SCA022871R5520	Switch-disconnector	23
OT1000E22P	1SCA022871R5610	Switch-disconnector	23
OT1000EM03P	1SCA118937R1001	Earthing switch	33
OT1000EM04P	1SCA118950R1001	Earthing switch	33
OT1000EP03P	1SCA118451R1001	Earthing switch	34
OT1000EP04P	1SCA118452R1001	Earthing switch	34
OT100F3	1SCA105004R1001	Switch-disconnector	19
OT100F3	1SCA105004R1001	Non-fusible disconnect switch	28
OT100F4N2	1SCA105018R1001	Switch-disconnector	19
OT100F4N2	1SCA105018R1001	Non-fusible disconnect switch	28
OT100F6	1SCA105021R1001	Switch-disconnector	20
OT100F8	1SCA105022R1001	Switch-disconnector	20
OT100FT3	1SCA105023R1001	Switch-disconnector	21
OT100FT4N2	1SCA105031R1001	Switch-disconnector	21
OT1200U03P	1SCA022860R6910	Non-fusible disconnect switch	29
OT1200U04P	1SCA022860R7120	Non-fusible disconnect switch	29
OT1200U12P	1SCA022871R9270	Non-fusible disconnect switch	29
OT1200U22P	1SCA105654R1001	Non-fusible disconnect switch	29
OT1250E03K	1SCA108356R1001	Switch-disconnector	25
OT1250E03N3P	1SCA022865R7060	Switch-disconnector	23
OT1250E03P	1SCA022860R6230	Switch-disconnector	23
OT1250E03W4P	1SCA022866R1920	Switch-disconnector	27
OT1250E03W8P	1SCA022871R8540	Switch-disconnector	27
OT1250E04K	1SCA108357R1001	Switch-disconnector	25
OT1250E04P	1SCA022860R6310	Switch-disconnector	23
OT1250E04W4P	1SCA022866R2220	Switch-disconnector	27
OT1250E12P	1SCA022871R5790	Switch-disconnector	23

Type	Order number	Description	Page
OT1250E22P	1SCA022871R5870	Switch-disconnector	23
OT1250EM03P	1SCA115708R1001	Earthing switch	33
OT1250EM03W4P	1SCA115805R1001	Earthing switch	33
OT1250EM03W8P	1SCA115810R1001	Earthing switch	33
OT1250EM04P	1SCA118949R1001	Earthing switch	33
OT1250EM04W4P	1SCA118940R1001	Earthing switch	33
OT1250EM04W8P	1SCA118941R1001	Earthing switch	33
OT1250EP03P	1SCA118453R1001	Earthing switch	34
OT1250EP04P	1SCA118454R1001	Earthing switch	34
OT125F3	1SCA105033R1001	Switch-disconnector	19
OT125F4N2	1SCA105051R1001	Switch-disconnector	19
OT125F6	1SCA105057R1001	Switch-disconnector	20
OT125F8	1SCA105059R1001	Switch-disconnector	20
OT125FL31)	1SCA112372R1001	Switch-disconnector	19
OT125FLA32)	1SCA114832R1001	Switch-disconnector	19
OT125FLB33)	1SCA114833R1001	Switch-disconnector	19
OT125FT3	1SCA105060R1001	Switch-disconnector	21
OT125FT4N2	1SCA105066R1001	Switch-disconnector	21
OT1600E03K	1SCA108352R1001	Switch-disconnector	25
OT1600E03N3P	1SCA022865R6920	Switch-disconnector	23
OT1600E03P	1SCA022860R6580	Switch-disconnector	23
OT1600E03W4P	1SCA022865R9860	Switch-disconnector	27
OT1600E03W8P	1SCA022871R8970	Switch-disconnector	27
OT1600E04K	1SCA108358R1001	Switch-disconnector	25
OT1600E04P	1SCA022860R6740	Switch-disconnector	23
OT1600E04W4P	1SCA022866R1090	Switch-disconnector	27
OT1600E12P	1SCA022871R5950	Switch-disconnector	23
OT1600E22P	1SCA022871R6090	Switch-disconnector	23
OT1600EM03P	1SCA115815R1001	Earthing switch	33
OT1600EM03W4P	1SCA115822R1001	Earthing switch	33
OT1600EM03W8P	1SCA115827R1001	Earthing switch	33
OT1600EM04P	1SCA118948R1001	Earthing switch	33
OT1600EM04W4P	1SCA118942R1001	Earthing switch	33
OT1600EM04W8P	1SCA118944R1001	Earthing switch	33
OT1600EP03P	1SCA118455R1001	Earthing switch	34
OT1600EP04P	1SCA118456R1001	Earthing switch	34
OT160EV03K	1SCA120513R1001	Switch-disconnector	25
OT160EV03P	1SCA120514R1001	Switch-disconnector	22
OT160EV03WP	1SCA120517R1001	Switch-disconnector	26
OT160EV04K	1SCA120520R1001	Switch-disconnector	25
OT160EV04P	1SCA120521R1001	Switch-disconnector	22
OT160EV04WP	1SCA120523R1001	Switch-disconnector	26
OT160EV12P	1SCA120529R1001	Switch-disconnector	22
OT160EV12WP	1SCA120606R1001	Switch-disconnector	26
OT160EV22P	1SCA120537R1001	Switch-disconnector	22
OT160EV22WP	1SCA120539R1001	Switch-disconnector	26
OT160EVS03	1SCA120563R1001	Side operated switch-disconnector	32
OT160EVS03K	1SCA120570R1001	Side operated switch-disconnector	32
OT160EVS04	1SCA120564R1001	Side operated switch-disconnector	32
OT160EVS04K	1SCA120565R1001	Side operated switch-disconnector	32
OT16F3	1SCA104811R1001	Switch-disconnector	19
OT16F3	1SCA104811R1001	Non-fusible disconnect switch	28
OT16F4N2	1SCA104829R1001	Switch-disconnector	19
OT16F4N2	1SCA104829R1001	Non-fusible disconnect switch	28
OT16F6	1SCA104834R1001	Switch-disconnector	20
OT16F8	1SCA104836R1001	Switch-disconnector	20
OT16FT3	1SCA104838R1001	Switch-disconnector	21
OT16FT3	1SCA104838R1001	Non-fusible disconnect switch	28
OT16FT4N2	1SCA105711R1001	Switch-disconnector	21
OT16FT4N2	1SCA105711R1001	Non-fusible disconnect switch	28
OT2000E03K	1SCA108359R1001	Switch-disconnector	25
OT2000E03N3P	1SCA108037R1001	Switch-disconnector	23
OT2000E03P	1SCA108036R1001	Switch-disconnector	23
OT2000E03W4P	1SCA108042R1001	Switch-disconnector	27
OT2000E03W8P	1SCA108045R1001	Switch-disconnector	27
OT2000E04K	1SCA108362R1001	Switch-disconnector	25
OT2000E04P	1SCA108038R1001	Switch-disconnector	23
OT2000E12P	1SCA108039R1001	Switch-disconnector	23
OT2000E13W4P	1SCA109284R1001	Switch-disconnector	27
OT2000E13W8P	1SCA109283R1001	Switch-disconnector	27

Type	Order number	Description	Page
OT2000E22P	1SCA108041R1001	Switch-disconnector	23
OT2000EM03P	1SCA118939R1001	Earthing switch	33
OT2000EM04P	1SCA118947R1001	Earthing switch	33
OT2000EP03P	1SCA118457R1001	Earthing switch	34
OT2000EP04P	1SCA118458R1001	Earthing switch	34
OT200E03K	1SCA022763R4820	Switch-disconnector	25
OT200E03P	1SCA022712R0800	Switch-disconnector	22
OT200E03WP	1SCA022744R2670	Switch-disconnector	26
OT200E04K	1SCA022763R4910	Switch-disconnector	25
OT200E04P	1SCA022713R4930	Switch-disconnector	22
OT200E04WP	1SCA022744R3130	Switch-disconnector	26
OT200E12P	1SCA022721R3990	Switch-disconnector	22
OT200E12WP	1SCA022744R2910	Switch-disconnector	26
OT200E22P	1SCA022721R4020	Switch-disconnector	22
OT200E22WP	1SCA022744R3300	Switch-disconnector	26
OT200ES03	1SCA022860R0200	Side operated switch-disconnector	32
OT200ES03K	1SCA022860R0620	Side operated switch-disconnector	32
OT200ES04	1SCA022860R0540	Side operated switch-disconnector	32
OT200ES04K	1SCA022860R0710	Side operated switch-disconnector	32
OT200U03P	1SCA022709R9920	Non-fusible disconnect switch	29
OT200U04P	1SCA022710R0610	Non-fusible disconnect switch	29
OT200U12P	1SCA022752R2010	Non-fusible disconnect switch	29
OT200U22P	1SCA022741R8880	Non-fusible disconnect switch	29
OT2500E03K	1SCA108361R1001	Switch-disconnector	25
OT2500E03N3P	1SCA108035R1001	Switch-disconnector	23
OT2500E03P	1SCA104972R1001	Switch-disconnector	23
OT2500E03W4P	1SCA108047R1001	Switch-disconnector	27
OT2500E03W8P	1SCA108049R1001	Switch-disconnector	27
OT2500E04K	1SCA108363R1001	Switch-disconnector	25
OT2500E04P	1SCA105140R1001	Switch-disconnector	23
OT2500E12P	1SCA104978R1001	Switch-disconnector	23
OT2500E13W4P	1SCA109285R1001	Switch-disconnector	27
OT2500E13W8P	1SCA109286R1001	Switch-disconnector	27
OT2500E22P	1SCA105156R1001	Switch-disconnector	23
OT2500EM03P	1SCA115835R1001	Earthing switch	33
OT2500EM03W4P	1SCA115840R1001	Earthing switch	33
OT2500EM03W8P	1SCA115843R1001	Earthing switch	33
OT2500EM04P	1SCA118946R1001	Earthing switch	33
OT2500EM04W4P	1SCA118943R1001	Earthing switch	33
OT2500EM04W8P	1SCA118945R1001	Earthing switch	33
OT2500EP03P	1SCA118459R1001	Earthing switch	34
OT2500EP04P	1SCA118460R1001	Earthing switch	34
OT250E03K	1SCA022763R5040	Switch-disconnector	25
OT250E03P	1SCA022710R0100	Switch-disconnector	22
OT250E03WP	1SCA022744R3560	Switch-disconnector	26
OT250E04K	1SCA022763R5210	Switch-disconnector	25
OT250E04P	1SCA022710R0520	Switch-disconnector	22
OT250E04WP	1SCA022744R3810	Switch-disconnector	26
OT250E12P	1SCA022721R4110	Switch-disconnector	22
OT250E12WP	1SCA022745R0000	Switch-disconnector	26
OT250E22P	1SCA022721R4290	Switch-disconnector	22
OT250E22WP	1SCA022745R0180	Switch-disconnector	26
OT250ES03	1SCA022860R0890	Side operated switch-disconnector	32
OT250ES03K	1SCA022860R0970	Side operated switch-disconnector	32
OT250ES04	1SCA022860R1010	Side operated switch-disconnector	32
OT250ES04K	1SCA022860R1190	Side operated switch-disconnector	32
OT25F3	1SCA104857R1001	Switch-disconnector	19
OT25F3	1SCA104857R1001	Non-fusible disconnect switch	28
OT25F4N2	1SCA104886R1001	Switch-disconnector	19
OT25F4N2	1SCA104886R1001	Non-fusible disconnect switch	28
OT25F6	1SCA104880R1001	Switch-disconnector	20
OT25F8	1SCA104882R1001	Switch-disconnector	20
OT25FT3	1SCA104884R1001	Switch-disconnector	21
OT25FT3	1SCA104884R1001	Non-fusible disconnect switch	28
OT25FT4N2	1SCA104900R1001	Switch-disconnector	21
OT25FT4N2	1SCA104900R1001	Non-fusible disconnect switch	28
OT30F3	1SCA105068R1001	Non-fusible disconnect switch	28
OT30F4N2	1SCA108347R1001	Non-fusible disconnect switch	28
OT315E03K	1SCA022763R5630	Switch-disconnector	25
OT315E03P	1SCA022718R8510	Switch-disconnector	22

Type	Order number	Description	Page
OT315E03WP	1SCA022809R8650	Switch-disconnector	26
OT315E04K	1SCA022763R5710	Switch-disconnector	25
OT315E04P	1SCA022719R1730	Switch-disconnector	22
OT315E04WP	1SCA022809R8900	Switch-disconnector	26
OT315E12P	1SCA022727R4190	Switch-disconnector	22
OT315E12WP	1SCA022809R9380	Switch-disconnector	26
OT315E22P	1SCA022727R4270	Switch-disconnector	22
OT315E22WP	1SCA022810R0900	Switch-disconnector	26
OT315ES03	1SCA022860R1270	Side operated switch-disconnector	32
OT315ES03K	1SCA022860R1350	Side operated switch-disconnector	32
OT315ES04	1SCA022860R1510	Side operated switch-disconnector	32
OT315ES04K	1SCA022860R1600	Side operated switch-disconnector	32
OT400E03K	1SCA022763R5390	Switch-disconnector	25
OT400E03P	1SCA022718R8780	Switch-disconnector	22
OT400E03WP	1SCA022809R8310	Switch-disconnector	26
OT400E04K	1SCA022763R5550	Switch-disconnector	25
OT400E04P	1SCA022719R1810	Switch-disconnector	22
OT400E04WP	1SCA022809R8810	Switch-disconnector	26
OT400E12P	1SCA022727R5750	Switch-disconnector	22
OT400E12WP	1SCA022809R9200	Switch-disconnector	26
OT400E22P	1SCA022727R5830	Switch-disconnector	22
OT400E22WP	1SCA022810R0570	Switch-disconnector	26
OT400ES03	1SCA022860R1780	Side operated switch-disconnector	32
OT400ES03K	1SCA022860R1860	Side operated switch-disconnector	32
OT400ES04	1SCA022860R1940	Side operated switch-disconnector	32
OT400ES04K	1SCA022860R2080	Side operated switch-disconnector	32
OT400U03P	1SCA022718R9670	Non-fusible disconnect switch	29
OT400U04P	1SCA022719R1900	Non-fusible disconnect switch	29
OT400U12P	1SCA022754R6960	Non-fusible disconnect switch	29
OT400U22P	1SCA022762R7290	Non-fusible disconnect switch	29
OT40F3	1SCA104902R1001	Switch-disconnector	19
OT40F3	1SCA104902R1001	Non-fusible disconnect switch	28
OT40F4N2	1SCA104932R1001	Switch-disconnector	19
OT40F4N2	1SCA104932R1001	Non-fusible disconnect switch	28
OT40F6	1SCA104936R1001	Switch-disconnector	20
OT40F8	1SCA104938R1001	Switch-disconnector	20
OT40FT3	1SCA104940R1001	Switch-disconnector	21
OT40FT3	1SCA104940R1001	Non-fusible disconnect switch	28
OT40FT4N2	1SCA104956R1001	Switch-disconnector	21
OT40FT4N2	1SCA104956R1001	Non-fusible disconnect switch	28
OT600U03P	1SCA022718R9830	Non-fusible disconnect switch	29
OT600U04P	1SCA022719R2200	Non-fusible disconnect switch	29
OT600U12P	1SCA022753R7710	Non-fusible disconnect switch	29
OT600U22P	1SCA022753R7890	Non-fusible disconnect switch	29
OT60F3	1SCA105076R1001	Non-fusible disconnect switch	28
OT60F4N2	1SCA108348R1001	Non-fusible disconnect switch	28
OT630E03K	1SCA022779R4940	Switch-disconnector	25
OT630E03N3P	1SCA022779R4860	Switch-disconnector	22
OT630E03P	1SCA022718R8940	Switch-disconnector	22
OT630E04K	1SCA022779R5080	Switch-disconnector	25
OT630E04P	1SCA022719R2030	Switch-disconnector	22
OT630E12P	1SCA022753R4790	Switch-disconnector	22
OT630E22P	1SCA022753R4870	Switch-disconnector	22
OT630ES03	1SCA022860R2240	Side operated switch-disconnector	32
OT630ES03K	1SCA022860R2320	Side operated switch-disconnector	32
OT630ES04	1SCA022860R2410	Side operated switch-disconnector	32
OT630ES04K	1SCA022860R2590	Side operated switch-disconnector	32
OT63F3	1SCA105332R1001	Switch-disconnector	19
OT63F3	1SCA105332R1001	Non-fusible disconnect switch	28
OT63F4N2	1SCA105365R1001	Switch-disconnector	19
OT63F4N2	1SCA105365R1001	Non-fusible disconnect switch	28
OT63F6	1SCA105379R1001	Switch-disconnector	20
OT63F8	1SCA105381R1001	Switch-disconnector	20
OT63FT3	1SCA105382R1001	Switch-disconnector	21
OT63FT3	1SCA105382R1001	Non-fusible disconnect switch	28
OT63FT4N2	1SCA105393R1001	Switch-disconnector	21
OT63FT4N2	1SCA105393R1001	Non-fusible disconnect switch	28
OT800E03K	1SCA022779R5160	Switch-disconnector	25
OT800E03N3P	1SCA022779R4780	Switch-disconnector	22
OT800E03P	1SCA022718R9410	Switch-disconnector	22
OT800E04K	1SCA022779R5240	Switch-disconnector	25
OT800E04P	1SCA022719R2110	Switch-disconnector	22
OT800E12P	1SCA022753R5170	Switch-disconnector	22
OT800E22P	1SCA022753R5250	Switch-disconnector	22
OT800ES03	1SCA022860R2670	Side operated switch-disconnector	32
OT800ES03K	1SCA022860R2750	Side operated switch-disconnector	32
OT800ES04	1SCA022860R2830	Side operated switch-disconnector	32
OT800ES04K	1SCA022860R2910	Side operated switch-disconnector	32
OT800U03P	1SCA105665R1001	Non-fusible disconnect switch	29
OT800U04P	1SCA105667R1001	Non-fusible disconnect switch	29
OT800U12P	1SCA106128R1001	Non-fusible disconnect switch	29
OT800U22P	1SCA106125R1001	Non-fusible disconnect switch	29
OT80F3	1SCA105798R1001	Switch-disconnector	19
OT80F3	1SCA105798R1001	Non-fusible disconnect switch	28
OT80F4N2	1SCA105413R1001	Switch-disconnector	19
OT80F4N2	1SCA105413R1001	Non-fusible disconnect switch	28
OT80F6	1SCA105427R1001	Switch-disconnector	20
OT80F8	1SCA105429R1001	Switch-disconnector	20
OT80FT3	1SCA105431R1001	Switch-disconnector	21
OT80FT3	1SCA105431R1001	Non-fusible disconnect switch	28
OT80FT4N2	1SCA105499R1001	Switch-disconnector	21
OT80FT4N2	1SCA105499R1001	Non-fusible disconnect switch	28
OTB1600/6	1SCA100768R1001	Phase separator	62
OTB800/6	1SCA022821R7760	Phase separator	62
OTDC16F2	1SCA121454R1001	DC switch-disconnector	30
OTDC16F3	1SCA121457R1001	DC switch-disconnector	30
OTDC16F4	1SCA121461R1001	DC switch-disconnector	30
OTDC16FT2	1SCA123839R1001	DC switch-disconnector	31
OTDC16FT3	1SCA123840R1001	DC switch-disconnector	31
OTDC16FT4	1SCA123841R1001	DC switch-disconnector	31
OTDC25F2	1SCA121455R1001	DC switch-disconnector	30
OTDC25F3	1SCA121458R1001	DC switch-disconnector	30
OTDC25F4	1SCA121462R1001	DC switch-disconnector	30
OTDC25FT2	1SCA123842R1001	DC switch-disconnector	31
OTDC25FT3	1SCA123843R1001	DC switch-disconnector	31
OTDC25FT4	1SCA123844R1001	DC switch-disconnector	31
OTDC32F2	1SCA121456R1001	DC switch-disconnector	30
OTDC32F3	1SCA121459R1001	DC switch-disconnector	30
OTDC32F4	1SCA121463R1001	DC switch-disconnector	30
OTDC32FT2	1SCA123845R1001	DC switch-disconnector	31
OTDC32FT3	1SCA123846R1001	DC switch-disconnector	31
OTDC32FT4	1SCA123847R1001	DC switch-disconnector	31
OTM1000E2M230V	1SCA121396R1001	Motorized switch-disconnector	35
OTM1000E3M230C	1SCA115364R1001	Motorized switch-disconnector	35
OTM1000E4M230C	1SCA115368R1001	Motorized switch-disconnector	35
OTM1250E2M230V	1SCA121193R1001	Motorized switch-disconnector	35
OTM1250E3M230C	1SCA115365R1001	Motorized switch-disconnector	35
OTM1250E4M230C	1SCA115367R1001	Motorized switch-disconnector	35
OTM1600E3M230C	1SCA115366R1001	Motorized switch-disconnector	35
OTM1600E4M230C	1SCA115369R1001	Motorized switch-disconnector	35
OTM160E2M230V	1SCA121183R1001	Motorized switch-disconnector	35
OTM160E2WM230V	1SCA121186R1001	Motorized switch-disconnector	36
OTM160E3M230C	1SCA115283R1001	Motorized switch-disconnector	35
OTM160E3WM230C	1SCA115286R1001	Motorized switch-disconnector	36
OTM160E4M230C	1SCA115293R1001	Motorized switch-disconnector	35
OTM160E4WM230C	1SCA115295R1001	Motorized switch-disconnector	36
OTM2000E2M230V	1SCA121201R1001	Motorized switch-disconnector	35
OTM2000E3M230C	1SCA115372R1001	Motorized switch-disconnector	35
OTM2000E4M230C	1SCA115374R1001	Motorized switch-disconnector	35
OTM200E2M230V	1SCA121184R1001	Motorized switch-disconnector	35
OTM200E2WM230V	1SCA121187R1001	Motorized switch-disconnector	36
OTM200E3M230C	1SCA115284R1001	Motorized switch-disconnector	35
OTM200E3WM230C	1SCA115288R1001	Motorized switch-disconnector	36
OTM200E4M230C	1SCA115292R1001	Motorized switch-disconnector	35
OTM200E4WM230C	1SCA115296R1001	Motorized switch-disconnector	36
OTM2500E2M230V	1SCA121195R1001	Motorized switch-disconnector	35
OTM2500E3M230C	1SCA115373R1001	Motorized switch-disconnector	35
OTM2500E4M230C	1SCA115375R1001	Motorized switch-disconnector	35
OTM250E2M230V	1SCA121185R1001	Motorized switch-disconnector	35
OTM250E2WM230V	1SCA121188R1001	Motorized switch-disconnector	36

Type	Order number	Description	Page
OTM250E3M230C	1SCA115285R1001	Motorized switch-disconnector	35
OTM250E3WM230C	1SCA115289R1001	Motorized switch-disconnector	36
OTM250E4M230C	1SCA115290R1001	Motorized switch-disconnector	35
OTM250E4WM230C	1SCA115297R1001	Motorized switch-disconnector	36
OTM315E2M230V	1SCA121189R1001	Motorized switch-disconnector	35
OTM315E3M230C	1SCA115334R1001	Motorized switch-disconnector	35
OTM315E4M230C	1SCA115335R1001	Motorized switch-disconnector	35
OTM400E2M230V	1SCA121199R1001	Motorized switch-disconnector	35
OTM400E3M230C	1SCA115333R1001	Motorized switch-disconnector	35
OTM400E4M230C	1SCA115336R1001	Motorized switch-disconnector	35
OTM630E2M230V	1SCA121190R1001	Motorized switch-disconnector	35
OTM630E3M230C	1SCA115354R1001	Motorized switch-disconnector	35
OTM630E4M230C	1SCA115357R1001	Motorized switch-disconnector	35
OTM800E2M230V	1SCA121197R1001	Motorized switch-disconnector	35
OTM800E3M230C	1SCA115355R1001	Motorized switch-disconnector	35
OTM800E4M230C	1SCA115356R1001	Motorized switch-disconnector	35
OTPD125FP	1SCA105083R1001	Neutral and earth terminal	59
OTPD40FP	1SCA104994R1001	Neutral and earth terminal	59
OTPD80FD	1SCA105444R1001	Neutral and earth terminal	59
OTPD80FP	1SCA105445R1001	Neutral and earth terminal	59
OTPE125FD	1SCA105698R1001	Neutral and earth terminal	59
OTPE125FP	1SCA105128R1001	Neutral and earth terminal	59
OTPE40FD	1SCA109884R1001	Neutral and earth terminal	59
OTPE40FP	1SCA104995R1001	Neutral and earth terminal	59
OTPE80FD	1SCA105446R1001	Neutral and earth terminal	59
OTPE80FP	1SCA105448R1001	Neutral and earth terminal	59
OTPL125FD	1SCA105088R1001	Fourth pole	58
OTPL125FP	1SCA105090R1001	Fourth pole	58
OTPL40FD	1SCA105716R1001	Fourth pole	58
OTPL40FP	1SCA105717R1001	Fourth pole	58
OTPL80FD	1SCA105451R1001	Fourth pole	58
OTPL80FP	1SCA105452R1001	Fourth pole	58
OTPN125FD	1SCA105092R1001	Neutral and earth terminal	59
OTPN125FP	1SCA105094R1001	Neutral and earth terminal	59
OTPN40FD	1SCA105718R1001	Neutral and earth terminal	59
OTPN40FP	1SCA104997R1001	Neutral and earth terminal	59
OTPN80FD	1SCA105456R1001	Neutral and earth terminal	59
OTPN80FP	1SCA105457R1001	Neutral and earth terminal	59
OTPS125FD	1SCA105096R1001	Fourth pole	58
OTPS125FP	1SCA105099R1001	Fourth pole	58
OTPS40FDN1	1SCA104999R1001	Fourth pole	58
OTPS40FDN2	1SCA104998R1001	Fourth pole	58
OTPS40FPN1	1SCA105001R1001	Fourth pole	58
OTPS40FPN2	1SCA105000R1001	Fourth pole	58
OTPS80FD	1SCA105458R1001	Fourth pole	58
OTPS80FP	1SCA105461R1001	Fourth pole	58
OTS125T1	1SCA022379R9760	Terminal shroud	60
OTS125T1P	1SCA022491R9970	Terminal shroud	60
OTS125T3	1SCA022379R9680	Terminal shroud	60
OTS125T3P	1SCA022491R9890	Terminal shroud	60
OTS1600G1L/3	1SCA022871R9510	Terminal shroud	61
OTS1600G1L/4	1SCA022871R9780	Terminal shroud	61
OTS1600G1S/3	1SCA022871R9600	Terminal shroud	61
OTS1600G1S/4	1SCA022871R9860	Terminal shroud	61
OTS2500G1L/3	1SCA107261R1001	Terminal shroud	61
OTS2500G1L/4	1SCA107262R1001	Terminal shroud	61
OTS2500G1S/3	1SCA107260R1001	Terminal shroud	61
OTS2500G1S/4	1SCA107271R1001	Terminal shroud	61
OTS250G1L/3	1SCA022731R8150	Terminal shroud	61
OTS250G1L/4	1SCA022731R8230	Terminal shroud	61
OTS250G1S/3	1SCA022731R8310	Terminal shroud	61
OTS250G1S/4	1SCA022731R8400	Terminal shroud	61
OTS400G1L/3	1SCA022736R8840	Terminal shroud	61
OTS400G1L/4	1SCA022736R9490	Terminal shroud	61
OTS400G1S/3	1SCA022736R9060	Terminal shroud	61
OTS400G1S/4	1SCA022736R9650	Terminal shroud	61
OTS40T1	1SCA105314R1001	Terminal shroud	60
OTS40T3	1SCA105317R1001	Terminal shroud	60
OTS63T1	1SCA022353R6910	Terminal shroud	60
OTS63T3	1SCA022353R6750	Terminal shroud	60
OTS800G1L/3	1SCA022776R7890	Terminal shroud	61
OTS800G1L/4	1SCA022776R7970	Terminal shroud	61
OTS800G1S/3	1SCA022776R8190	Terminal shroud	61
OTS800G1S/4	1SCA022776R8270	Terminal shroud	61
OTV1000EK	1SCA106608R1001	Handle	46
OTV1000EPK	1SCA121085R1001	Handle	46
OTV250EK	1SCA022763R2700	Handle	46
OTV400EK	1SCA022763R2960	Handle	46
OTV800EK	1SCA022804R6340	Handle	46
OTVS1	1SCA111413R1001	Handle and spare fuse storage clip	62
OTVS2	1SCA111414R1001	Handle and spare fuse storage clip	62
OTVY250EK	1SCA022772R7910	Handle	46
OTVY400EK	1SCA022772R7830	Handle	46
OTVY800EK	1SCA022810R2780	Handle	46
OTZ1250E	1SCA103765R1001	Fourth pole	58
OTZ1600E	1SCA100431R1001	Fourth pole	58
OTZ2500E	1SCA107931R1001	Fourth pole	58
OTZ250E	1SCA022735R9420	Fourth pole	58
OTZ400E	1SCA022749R1960	Fourth pole	58
OTZ800E	1SCA022807R5100	Fourth pole	58
OTZL4	1SCA116554R1001	Mechanical interlock kit	70
OTZM4A	1SCA118510R1001	Electrical interlock kit	70
OTZM4L	1SCA118511R1001	Electrical interlock kit	70
OTZT1A	1SCA106522R1001	Mechanism interlock kit and electrical interlock	70
OTZT1L	1SCA106527R1001	Mechanism interlock kit and electrical interlock	70
OTZT2A	1SCA106523R1001	Mechanism interlock kit and electrical interlock	70
OTZT2L	1SCA106529R1001	Mechanism interlock kit and electrical interlock	70
OTZT3A	1SCA106525R1001	Mechanism interlock kit and electrical interlock	70
OTZT3L	1SCA106530R1001	Mechanism interlock kit and electrical interlock	70
OTZT4A	1SCA106526R1001	Mechanism interlock kit and electrical interlock	70
OTZT4L	1SCA106531R1001	Mechanism interlock kit and electrical interlock	70
OTZW10	1SCA022431R5280	Conversion kit	67
OTZW17	1SCA022387R1620	Conversion kit	67
OTZW24	1SCA022639R5610	Conversion kit	67
OTZW25	1SCA022778R6920	Conversion kit	66
OTZW26	1SCA022778R7060	Conversion kit	67
OTZW8	1SCA022421R7600	Conversion kit	66
OTZW8	1SCA022421R7600	Conversion kit	66
OTZW8	1SCA022421R7600	Conversion kit	66
OWC6D125	1SCA104494R1001	Conversion kit	66
OWC6D40	1SCA022865R4550	Conversion kit	66
OWC6D80	1SCA022865R4630	Conversion kit	66
OWP6D125	1SCA022865R5100	Conversion kit	66
OWP6D40	1SCA022865R4800	Conversion kit	66
OWP6D80	1SCA022865R5010	Conversion kit	66
OX6X105	1SCA111930R1001	Shaft	50
OX6X115	1SCA111931R1001	Shaft	50
OX6X130	1SCA111460R1001	Shaft	50
OX6X155	1SCA111275R1001	Shaft	50
OX6X200	1SCA111932R1001	Shaft	50
OX6X300	1SCA111933R1001	Shaft	50
OX6X60	1SCA111459R1001	Shaft	50
OX6X85	1SCA111274R1001	Shaft	50
OXN1250T	1SCA104162R1001	Neutral link	59
OXN250	1SCA022752R9950	Neutral link	59
OXN400	1SCA022770R3060	Neutral link	59
OXN800T	1SCA022829R0840	Neutral link	59
OXP12X166	1SCA022325R7100	Shaft	51
OXP12X185	1SCA022325R6710	Shaft	51
OXP12X250	1SCA022325R6980	Shaft	51
OXP12X250	1SCA022325R6980	Shaft	51
OXP12X250-45	1SCA022293R9400	Shaft	52

Type	Order number	Description	Page
OXP12X280	1SCA022137R5140	Shaft	51
OXP12X280-45	1SCA022382R0800	Shaft	52
OXP12X325	1SCA022042R5810	Shaft	51
OXP12X325-45	1SCA022304R4450	Shaft	52
OXP12X395	1SCA022042R5990	Shaft	51
OXP12X395-45	1SCA022749R0640	Shaft	52
OXP12X465	1SCA022042R6020	Shaft	51
OXP12X465-45	1SCA022423R1770	Shaft	52
OXP12X535	1SCA022042R6110	Shaft	51
OXP12X535-45	1SCA022723R2940	Shaft	52
OXP6X130	1SCA022057R0570	Shaft	50
OXP6X130-45	1SCA022355R9110	Shaft	52
OXP6X150	1SCA022295R5600	Shaft	50
OXP6X150-45	1SCA022294R4400	Shaft	52
OXP6X161	1SCA022067R1760	Shaft	50
OXP6X170	1SCA108224R1001	Shaft	50
OXP6X170-45	1SCA108227R1001	Shaft	52
OXP6X210	1SCA022295R6080	Shaft	50
OXP6X210-45	1SCA022294R4230	Shaft	52
OXP6X265	1SCA108225R1001	Shaft	50
OXP6X265-45	1SCA108228R1001	Shaft	52
OXP6X290	1SCA022042R6370	Shaft	50
OXP6X290-45	1SCA022304R4290	Shaft	52
OXP6X400	1SCA108226R1001	Shaft	50
OXP6X400-45	1SCA108229R1001	Shaft	52
OXS6X105	1SCA108043R1001	Shaft	50
OXS6X120	1SCA101654R1001	Shaft	50
OXS6X130	1SCA101655R1001	Shaft	50
OXS6X160	1SCA101656R1001	Shaft	50
OXS6X180	1SCA101659R1001	Shaft	50
OXS6X250	1SCA101660R1001	Shaft	50
OXS6X330	1SCA101661R1001	Shaft	50
OXS6X85	1SCA101647R1001	Shaft	50
OXT20X210X	1SCA103684R1001	Shaft tube	53
OZ331P67B	1SCA111427R1001	Handle	43
OZ331P67RY	1SCA111429R1001	Handle	43
OZ331SPB	1SCA112983R1001	Handle	43
OZ331SPRY	1SCA113097R1001	Handle	43
OZ371PB	1SCA111684R1001	Handle	43
OZ371PRY	1SCA111685R1001	Handle	43
OZG71	1SCA111686R1001	Shaft alignment ring	53
OZXB1L	1SCA022169R2030	Terminal clamp	63
OZXB1L/1	1SCA022194R0030	Terminal clamp	63
OZXB2	1SCA022119R7610	Terminal clamp	63
OZXB2/1	1SCA022194R0200	Terminal clamp	63
OZXB2K	1SCA022264R0010	Terminal shroud	61
OZXB2L	1SCA022158R7750	Terminal clamp	63
OZXB2L/1	1SCA022194R0460	Terminal clamp	63
OZXB3	1SCA022136R8100	Terminal clamp	63
OZXB3	1SCA022136R8100	Terminal clamp	64
OZXB3/1	1SCA022194R0620	Terminal clamp	63
OZXB3/1	1SCA022194R0620	Terminal clamp	64
OZXB3K	1SCA022264R0440	Terminal shroud	61
OZXB4	1SCA022137R4760	Terminal clamp	63
OZXB4	1SCA022137R4760	Terminal clamp	64
OZXB4/1	1SCA022194R0890	Terminal clamp	63
OZXB4/1	1SCA022194R0890	Terminal clamp	64
OZXB4K	1SCA022199R2850	Terminal shroud	61
OZXB5	1SCA022137R2470	Terminal clamp	63
OZXB5	1SCA022137R2470	Terminal clamp	64
OZXB5/1	1SCA022194R1010	Terminal clamp	63
OZXB5/1	1SCA022194R1010	Terminal clamp	64
OZXB5K	1SCA022283R8040	Terminal shroud	61
OZXB6	1SCA022137R4920	Terminal clamp	63
OZXB6	1SCA022137R4920	Terminal clamp	64
OZXB6/1	1SCA022194R1270	Terminal clamp	63
OZXB6/1	1SCA022194R1270	Terminal clamp	64
OZXB7	1SCA022185R0040	Terminal clamp	63
OZXB7/1	1SCA022194R1430	Terminal clamp	63
OZXB7L	1SCA022185R7130	Terminal clamp	63
OZXB7L	1SCA022185R7130	Terminal clamp	64
OZXB7L/1	1SCA022194R1600	Terminal clamp	63
OZXB7L/1	1SCA022194R1600	Terminal clamp	64
OZXB8	1SCA022744R1510	Terminal clamp	63
OZXB8/1	1SCA022744R1600	Terminal clamp	63
OZXB9	1SCA022750R3210	Terminal clamp	63
OZXB9/1	1SCA022750R3300	Terminal clamp	63
OZXK1	1SCA022131R8690	Auxiliary contact block	55
OZXK2	1SCA022131R8850	Auxiliary contact block	55
OZXK3	1SCA022131R9070	Auxiliary contact block	55
OZXK4	1SCA022131R9230	Auxiliary contact block	55
OZXK5	1SCA022131R9400	Auxiliary contact block	55
OZXK6	1SCA022131R9660	Auxiliary contact block	55
OZXL1	1SCA022439R6770	Terminal clamp	63
OZXL1/1	1SCA022469R6220	Terminal clamp	63
OZXP240	1SCA115542R1001	Terminal clamp	65
OZXP2X240	1SCA115544R1001	Terminal clamp	65
OZXP95	1SCA115539R1001	Terminal clamp	65
OZXR185	1SCA115531R1001	Terminal clamp	65
OZXR240	1SCA115532R1001	Terminal clamp	65
OZXR2X185	1SCA115534R1001	Terminal clamp	65
OZXR2X300	1SCA115535R1001	Terminal clamp	65
OZXR300	1SCA115533R1001	Terminal clamp	65
OZXR95	1SCA115530R1001	Terminal clamp	65
OZXT1	1SCA022469R6310	Terminal clamp	63
OZXT2	1SCA022620R7200	Terminal clamp	63
OZXT3	1SCA022639R0720	Terminal clamp	63
PB100 low	1SDA054970R1	Phase barrier	62
PB100 low	1SDA054971R1	Phase barrier	62
PB200 high	1SDA054972R1	Phase barrier	62
PB200 high	1SDA054973R1	Phase barrier	62
PDAL2/110AC50Hz	1SCA106543R1001	Coil	71
PDAL2/110AC60Hz	1SCA107100R1001	Coil	71
PDAL2/110DC	1SCA107105R1001	Coil	71
PDAL2/120AC60Hz	1SCA111353R1001	Coil	71
PDAL2/125DC	1SCA111338R1001	Coil	71
PDAL2/208AC60Hz	1SCA107101R1001	Coil	71
PDAL2/220DC	1SCA112503R1001	Coil	71
PDAL2/230AC50Hz	1SCA107102R1001	Coil	71
PDAL2/240AC60Hz	1SCA111356R1001	Coil	71
PDAL2/24AC60Hz	1SCA111350R1001	Coil	71
PDAL2/24DC	1SCA106542R1001	Coil	71
PDAL2/48DC	1SCA107103R1001	Coil	71
PDAL2/60DC	1SCA107104R1001	Coil	71
SA1	GJF1 101 903 R000	Locking accessory	69
ST	1SCA022407R8210	Labelling accessory	49
ST-E	1SCA022407R8300	Labelling accessory	49
YASDA21	1SCA022098R9420	Handle	46
YASDA35	1SCA104400R1001	Handle	46
YASDA6	1SCA022071R2890	Handle	46
YASDA7	1SCA022071R3010	Handle	46
YASDA8	1SCA022071R3270	Handle	46

Notes

Contact us

ABB Oy
Breakers and Switches
P.O. Box 622
FI-65101 Vaasa, Finland
Phone: +358 10 22 11
Fax: +358 10 22 45708
E-Mail: firstname.surname@fi.abb.com

www.abb.com

The technical data and dimensions are valid at the time of printing. We reserve the right to subsequent alterations.

Producted by A&V Insinöörit Oy / Tekninen viestintä, Vaasa, Finland Catalogue OT_OETL1GB 12-05 1SCC301001C0201

Power and productivity
for a better world™