MQ2005

Magnetic sensor

MQ23005BFRKG/B/AM/IO/0,3M/ZH/US

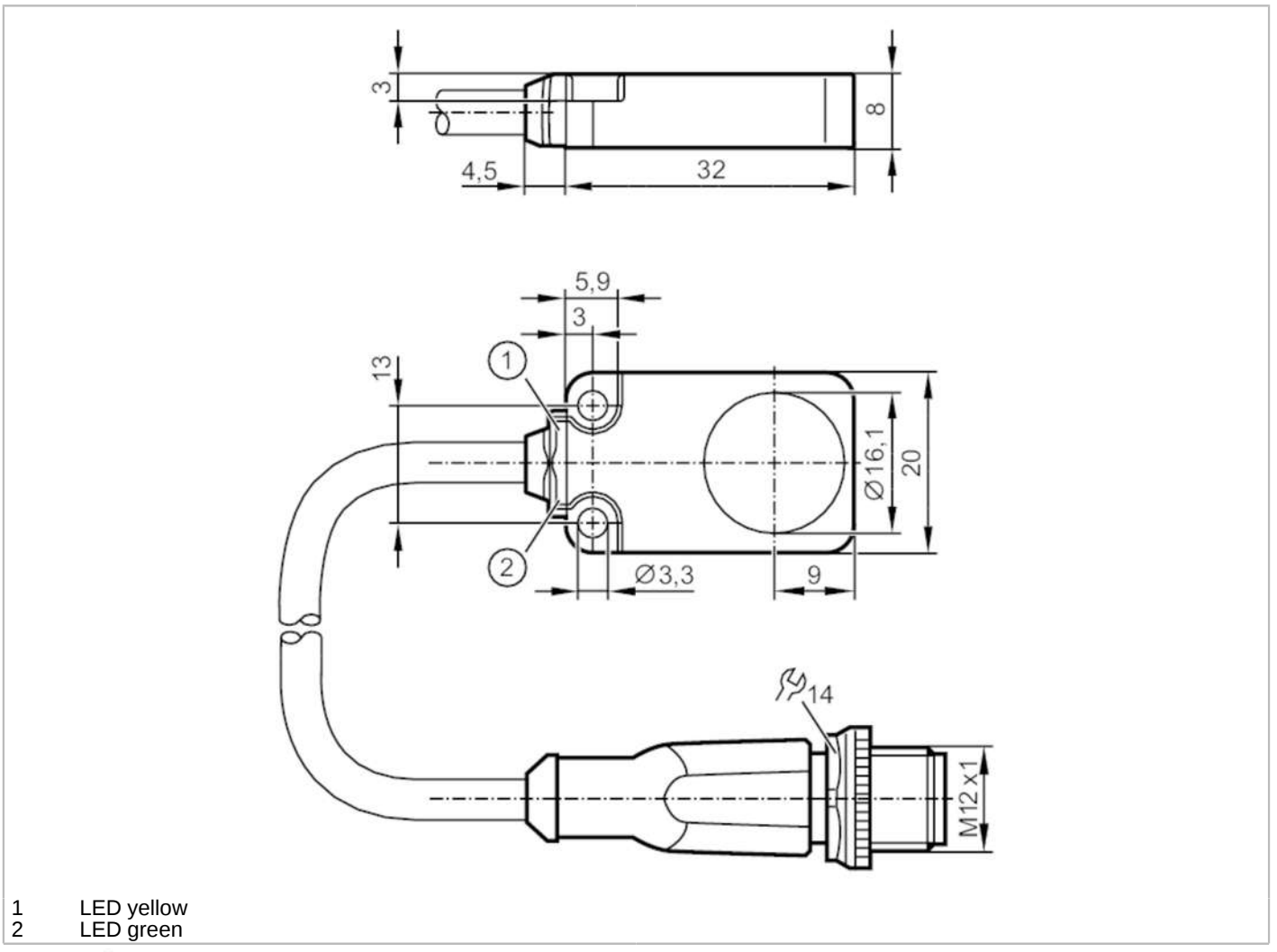

1 LED yellow
2 LED green

Product characteristics		
Electrical design		PNP/NPN; (parameterisable)
Output function		normally open / normally closed; (parameterisable)
Sensing range	[mm]	5
Communication interface		IO-Link
Housing		rectangular
Dimensions	[mm]	20 x 8 x 32
Application		
Media		ferrous only
Electrical data		
Operating voltage	[V]	10...30 DC
Rated insulation voltage	[V]	60
Current consumption	[mA]	< 30
Protection class		III
Reverse polarity protection		yes
Power-on delay time	[s]	< 0.3

MQ2005

Magnetic sensor

MQ23005BFRKG/B/AM/IO/0,3M/ZH/US

Outputs			
Electrical design		PNP/NPN; (parameterisable)	
Output function		normally open / normally closed; (parameterisable)	
Max. voltage drop switching output DC	[V]	2.5	
Max. leakage current	[mA]	0.1	
Permanent current rating of switching output DC	[mA]	100	
Short-time current rating of switching output	[mA]	100	
Switching frequency DC	[Hz]	200	
Short-circuit protection		yes	
Type of short-circuit protection		pulsed	
Overload protection		yes	
Detection zone			
Sensing range	[mm]	5	
Real sensing range Sr	[mm]	5 ± 10 %	
Operating distance	[mm]	0...4.05	
Accuracy / deviations			
Correction factor		steel: 1	
Hysteresis	[% of Sr]	< 10	
Switch point drift	[% of Sr]	-10...20	
Repeatability	[% of Sr]	10	
Software / programming			
Parameter setting options		hysteresis / window; switch-off delay; switch-on operations; Auto-teach	
Interfaces			
Communication interface		IO-Link	
Transmission type		COM2 (38,4 kBaud)	
IO-Link revision		1.1	
SDCI standard		IEC 61131-9 CDV	
Profiles		Smart Sensor: Identification and diagnosis; Multi-channel, two setpoint switching sensor, type 0 Generic Profiled Sensor; Teach Channel	
SIO mode		yes	
Required master port type		A	
Min. process cycle time	[ms]	9.6	
IO-Link process data (cyclical)		function	bit length
		process value	16
		device status	4
		binary switching information	4
IO-Link functions (acyclical)		application specific tag; operating hours counter; switching cycles counter	
Supported DeviceIDs		Type of operation	DeviceID
		Default	830
Note		For further information please see the IODD PDF file under "Downloads"	
Operating conditions			
Ambient temperature	[°C]	-25...80	

MQ2005

Magnetic sensor

MQ23005BFRKG/B/AM/IO/0,3M/ZH/US

Storage temperature	[°C]	-30...85	
Protection		IP 65; IP 67	
Tests / approvals			
EMC		EN 61000-4-2 ESD	4 kV CD / 8 kV AD
		EN 61000-4-3 HF radiated	10 V/m
		EN 61000-4-4 Burst	2 kV
		EN 61000-4-6 HF conducted	10 V
		EN 55011	class B
Vibration resistance		EN 60068-2-6 Fc	20 g (10...3000 Hz) / 50 sweep cycles, 1 octave per minute, in 3 axes
Shock resistance		EN 60068-2-27 Ea	100 g 11 ms half-sine; 3 shocks each in every direction of the 3 coordinate axes
Continuous shock resistance		EN 60068-2-27	40 g 6 ms; 4000 shocks each in every direction of the 3 coordinate axes
MTTF	[years]	1976	
UL approval		Ta	-25...60 °C
		Enclosure type	Type 1
		power supply	Limited Voltage/Current
		UL Approval no.	C010
		File number UL	E174191
Mechanical data			
Weight	[g]	44.9	
Housing		rectangular	
Mounting		flush mountable	
Dimensions	[mm]	20 x 8 x 32	
Materials		diecast zinc; LED window: TPU; potting: PUR	
Displays / operating elements			
Display		Display operation	1 x LED, green
		switching status	1 x LED, yellow
Remarks			
Pack quantity		1 pcs.	
Electrical connection			

Cable: 0.3 m, PUR, Ø 4.9 mm; flame-retardant (IEC 60332-2, UL: FT2)

Connection

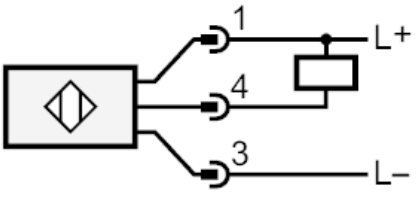

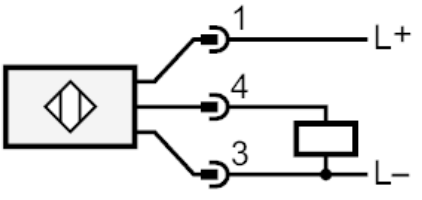

MQ2005

Magnetic sensor

MQ23005BFRKG/B/AM/IO/0,3M/ZH/US

Connector: 1 x M12; coding: A; Locking: knurled nut, rotatable

