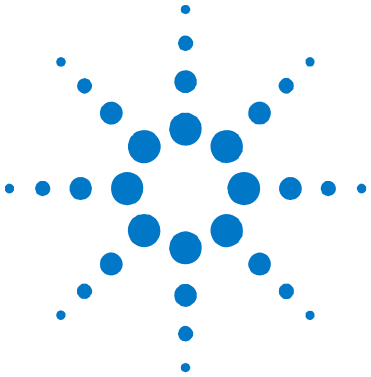

Agilent Technologies System DC Power Supply

Series N8700

User's Guide

Agilent Technologies

Legal Notices

© Agilent Technologies, Inc. 2009

No part of this document may be photocopied, reproduced, or translated to another language without the prior agreement and written consent of Agilent Technologies, Inc. as governed by United States and international copyright laws.

Warranty

The material contained in this document is provided "as is," and is subject to being changed, without notice, in future editions. Further, to the maximum extent permitted by applicable law, Agilent disclaims all warranties, either express or implied, with regard to this manual and any information contained herein, including but not limited to the implied warranties of merchantability and fitness for a particular purpose. Agilent shall not be liable for errors or for incidental or consequential damages in connection with the furnishing, use, or performance of this document or of any information contained herein. Should Agilent and the user have a separate written agreement with warranty terms covering the material in this document that conflict with these terms, the warranty terms in the separate agreement shall control.

Manual Editions

Manual Part Number: N8700-90001
Edition 1, May 2009
Printed in Malaysia.

Reprints of this manual containing minor corrections and updates may have the same printing date. Revised editions are identified by a new printing date.

Declaration of Conformity

Declarations of Conformity for this product and for other Agilent products may be downloaded from the Web. Go to http://regulations.corporate.agilent.com and click on "Declarations of Conformity." You can then search by product number to find the latest Declaration of Conformity.

Waste Electrical and Electronic Equipment (WEEE) Directive 2002/96/EC

This product complies with the WEEE Directive 2002/96/EC) marketing requirement. The affixed product label (see below) indicates that you must not discard this electrical/electronic product in domestic household waste.

Product Category: With reference to the equipment types in the WEEE directive Annex 1, this product is classified as "Monitoring and Control instrumentation" product.

Do not dispose in domestic household waste.

To return unwanted products, contact our local Agilent office, or see www.agilent.com/environment/product for more information.



Certification

Agilent Technologies certifies that this product met its published specifications at time of shipment from the factory. Agilent Technologies further certifies that its calibration measurements are traceable to the United States National Institute of Standards and Technology, to the extent allowed by the Institute's calibration facility, and to the calibration facilities of other International Standards Organization members.

Exclusive Remedies

THE REMEDIES PROVIDED HEREIN ARE THE CUSTOMER'S SOLE AND EXCLUSIVE REMEDIES. AGILENT TECHNOLOGIES SHALL NOT BE LIABLE FOR ANY DIRECT, INDIRECT, SPECIAL, INCIDENTAL, OR CONSEQUENTIAL DAMAGES, WHETHER BASED ON CONTRACT, TORT, OR ANY OTHER LEGAL THEORY.

Assistance

This product comes with the standard product warranty. Warranty options, extended support contacts, product maintenance agreements and customer assistance agreements are also available. Contact your nearest Agilent Technologies Sales and Service office for further information on Agilent Technologies' full line of Support Programs.

Technologies Licenses

The hardware and or software described in this document are furnished under a license and may be used or copied only in accordance with the terms of such license.

Restricted Rights Legend

Software and technical data rights granted to the federal government include only those rights customarily provided to end user customers. Agilent provides this customary commercial license in Software and technical data pursuant to FAR 12.211 (Technical Data) and 12.212 (Computer Software) and, for the Department of Defense, DFARS 252.227-7015 (Technical Data – Commercial Items) and DFARS 227.7202-3 (Rights in Commercial Computer Software or Computer Software Documentation).

Trademarks

Microsoft and Windows are U.S. registered trademarks of Microsoft Corporation.

Safety Notices

The following general safety precautions must be observed during all phases of operation of this instrument. Failure to comply with these precautions or with specific warnings or instructions elsewhere in this manual violates safety standards of design, manufacture, and intended use of the instrument. Agilent Technologies assumes no liability for the customer's failure to comply with these requirements.

General

Do not use this product in any manner not specified by the manufacturer. The protective features of this product may be impaired if it is used in a manner not specified in the operation instructions.

Before Applying Power

Verify that all safety precautions are taken. Make all connections to the unit before applying power. Note the instrument's external markings described under "Safety Symbols"

Ground the Instrument

This product is a Safety Class I instrument (provided with a protective earth terminal). To minimize shock hazard, the instrument chassis and cover must be connected to an electrical ground. The instrument must be connected to the ac power mains through a grounded power cable, with the ground wire firmly connected to an electrical ground (safety ground) at the power outlet. Any interruption of the protective (grounding) conductor or disconnection of the protective earth terminal will cause a potential shock hazard that could result in personal injury.

Fuses

The instrument contains an internal fuse, which is not customer accessible.

Do Not Operate in an Explosive Atmosphere

Do not operate the instrument in the presence of flammable gases or fumes.

Do Not Remove the Instrument Cover

Only qualified, service-trained personnel who are aware of the hazards involved should remove instrument covers. Always disconnect the power cable and any external circuits before removing the instrument cover.

Do Not Modify the Instrument

Do not install substitute parts or perform any unauthorized modification to the product. Return the product to an Agilent Sales and Service Office for service and repair to ensure that safety features are maintained.

In Case of Damage

Instruments that appear damaged or defective should be made inoperative and secured against unintended operation until they can be repaired by qualified service personnel

CAUTION

A **CAUTION** notice denotes a hazard. It calls attention to an operating procedure, practice, or the like that, if not correctly performed or adhered to, could result in damage to the product or loss of important data. Do not proceed beyond a **CAUTION** notice until the indicated conditions are fully understood and met.

WARNING

A WARNING notice denotes a hazard. It calls attention to an operating procedure, practice, or the like that, if not correctly performed or adhered to, could result in personal injury or death. Do not proceed beyond a WARNING notice until the indicated conditions are fully understood and met.

Safety Symbols


Direct current


Alternating current


Both direct and alternating current



Three phase alternating current


Earth (ground) terminal


Protective earth ground terminal.


Frame or chassis terminal


Terminal is at earth potential.


Neutral conductor on permanently installed equipment


Line conductor on permanently installed equipment.

On supply


Off supply


Standby supply. Unit is not completely disconnected from ac mains when switch is off


In position of a bi-stable push switch


Out position of a bi-stable push switch


Caution, risk of electric shock


Caution, hot surface


Caution, refer to accompanying documents

In this Book

This User's Manual contains the operating instructions, installation instructions, and specifications of the Agilent Technologies Series N8700 3.3kW and 5kW System DC Power Supplies. Specific chapters in this manual contain the following information:

- Quick Reference – Chapter 1 is a quick reference section that helps you quickly become familiar with your Agilent N8700 power supply.
- Installation – Chapter 2 describes how to install your power supply. It describes how to connect various loads to the output. It discusses remote sensing as well as parallel and series operation.
- Operating the Power Supply Locally – Chapter 3 describes how to operate the power supply from the front panel and from the analog connector on the rear panel. It also includes a turn-on check-out procedure to verify the unit is operating properly.
- Operating the Power Supply Remotely – Chapter 4 describes how to configure the remote interfaces. It also gives a brief overview of the SCPI command structure and basic programming concepts.
- Language Reference – Chapter 5 describes all of the SCPI programming commands.
- Programming Examples – Chapter 6 provides Visual BASIC example programs that illustrate some common applications.
- Specifications – Appendix A describes specifications and supplemental characteristics.
- Verification and Calibration Procedures – Appendix B explains the verification and calibration procedures.
- Service – Appendix C describes what to do if your unit requires service.
- Compatibility – Appendix D documents the compatibility commands of the Agilent 603xA power supplies that are supported by the Agilent N8700 power supplies.

NOTE

You can contact Agilent Technologies at one of the following telephone numbers for warranty, service, or technical support information.
In the United States: (800) 829-4444
In Europe: 31 20 547 2111
In Japan: 0120-421-345
Or use our Web link for information on contacting Agilent in your country or specific location: www.agilent.com/find/assist
Or contact your Agilent Technologies Representative.

The web contains the most up to date version of the manual. Go to http://www.agilent.com/find/N8700 to get the latest version of the manual.

Contents

1 - Quick Reference

The Agilent N8700 DC Power Supplies – At a Glance 8
The Front Panel - At a Glance 10
The Rear Panel – At a Glance 12

2 - Installation

General Information 16
Inspecting the Unit 16
Installing the Unit 17
Connecting the Line Cord 19
Connecting the Load 22
Output Voltage Sensing 26
Load Considerations 28
Parallel Connections 30
Series Connections 32
J1 Connector Connections 34

3 - Operating the Power Supply Locally

Turn-On Check-Out 36
Normal Operation 38
Protection Functions 39
Output On/Off Controls 42
Analog Programming of Output Voltage and Current 45

4 - Operating the Power Supply Remotely

Connecting to the Interfaces 50
SCPI Commands – an Introduction 60

5 - Language Reference

SCPI Command Summary 66
Calibration Commands 68
Measure Commands 69
Output Commands 70
Source Commands 71
Status Commands 73
System Commands 79
Trigger Commands 81

6 Programming Examples

Output Programming Example 84
Trigger Programming Example 86

Appendix A Specifications

Performance Specifications 90
Supplemental Characteristics 91
Outline Diagram 94

Appendix B Verification and Calibration

Verification 95
Calibration 124

Appendix C Service

Types of Service Available 128
Repackaging for Shipment 128
Operating Checklist 128
Error Messages 130
Recycling Plastic Components 134

Appendix D Compatibility

Differences – In General 136
Compatibility Command Summary 137

Index 139

1
Quick Reference

The Agilent N8700 DC Power Supplies – At a Glance 8
The Front Panel - At a Glance 10
The Rear Panel – At a Glance 12

This chapter concisely describes the Agilent Technologies Series N8700 Power Supplies.

This chapter is not meant to describe every operating feature in detail. It is simply a quick reference guide to quickly become familiar with the essential components of the power supply. It can also be used as a memory jogger for experienced users to quickly find a front/rear panel function.

A quick reference programming command chart is included in the beginning of chapter 5.

The Agilent N8700 DC Power Supplies – At a Glance

The Agilent Technologies Series N8700 System DC Power Supplies are general-purpose, 2U (two rack units) high, switching power supplies that are available with a wide variety of output voltage and current ratings. There are both 3.3 kW and 5 kW models.

These power supplies are power-factor corrected and operate from a worldwide AC voltage range. Output voltage and current are continuously displayed and LED indicators show the complete operating status of the power supply.

The front panel controls allow the user to set the output parameters, over-voltage, under-voltage, and over-current protection levels, and preview the settings.

The rear panel includes the necessary connectors to control and monitor the power supply operation by analog signals or by the built-in remote communication interfaces.

Output Features

- Constant voltage/constant current with automatic crossover.
- High-resolution voltage and current front panel controls.
- Accurate voltage and current readback.
- Independent edge-triggered external shut-off, and level-triggered external enable/disable.
- Parallel master/slave operation with active current sharing.
- Remote sensing to compensate for voltage drop in load leads.
- Analog output programming and monitoring.

System Features

- Built-in GBIB/LAN/USB interface.
- A built-in Web server that lets you control the instrument directly from an internet browser on your computer.
- Zero-gap stacking - no ventilation holes at the top and bottom surface of the power supply.
- Active power factor correction.
- Fan speed control for low noise and extended fan life.

Programmable Functions

- Output voltage and current setting.
- Output voltage and current measurement.
- Output voltage and current trigger setting.
- Output On/Off control.
- Over-current protection setting.
- Over-voltage protection setting and readback.
- Under-voltage limit setting and readback.
- Start-up mode (either last setting or reset mode)
- Status register setting and readback.
- Bus trigger
- Calibration

Model Ratings

3.3 kW Models Note 1, 2			5 kW Models Note 1, 2		
Model	**Voltage Range**	**Current Range**	**Model**	**Voltage Range**	**Current Range**
N8731A	0 – 8V	0 – 400A	N8754A	0 – 20V	0 – 250A
N8732A	0 – 10V	0 – 330A	N8755A	0 – 30V	0 – 170A
N8733A	0 – 15V	0 – 220A	N8756A	0 – 40V	0 – 125A
N8734A	0 – 20V	0 – 165A	N8757A	0 – 60V	0 – 85A
N8735A	0 – 30V	0 – 110A	N8758A	0 – 80V	0 – 65A
N8736A	0 – 40V	0 – 85A	N8759A	0 – 100V	0 – 50A
N8737A	0 – 60V	0 – 55A	N8760A	0 – 150V	0 – 34A
N8738A	0 – 80V	0 – 42A	N8761A	0 – 300V	0 – 17A
N8739A	0 – 100V	0 – 33A	N8762A	0 – 600V	0 – 8.5A
N8740A	0 – 150V	0 – 22A			
N8741A	0 – 300V	0 – 11A			
N8742A	0 – 600V	0 – 5.5A			

Note 1: Minimum output voltage is ≤ 0.2% of the rated output voltage.
Note 2: Minimum output current is ≤ 0.4% of the rated output current.

The Front Panel - At a Glance

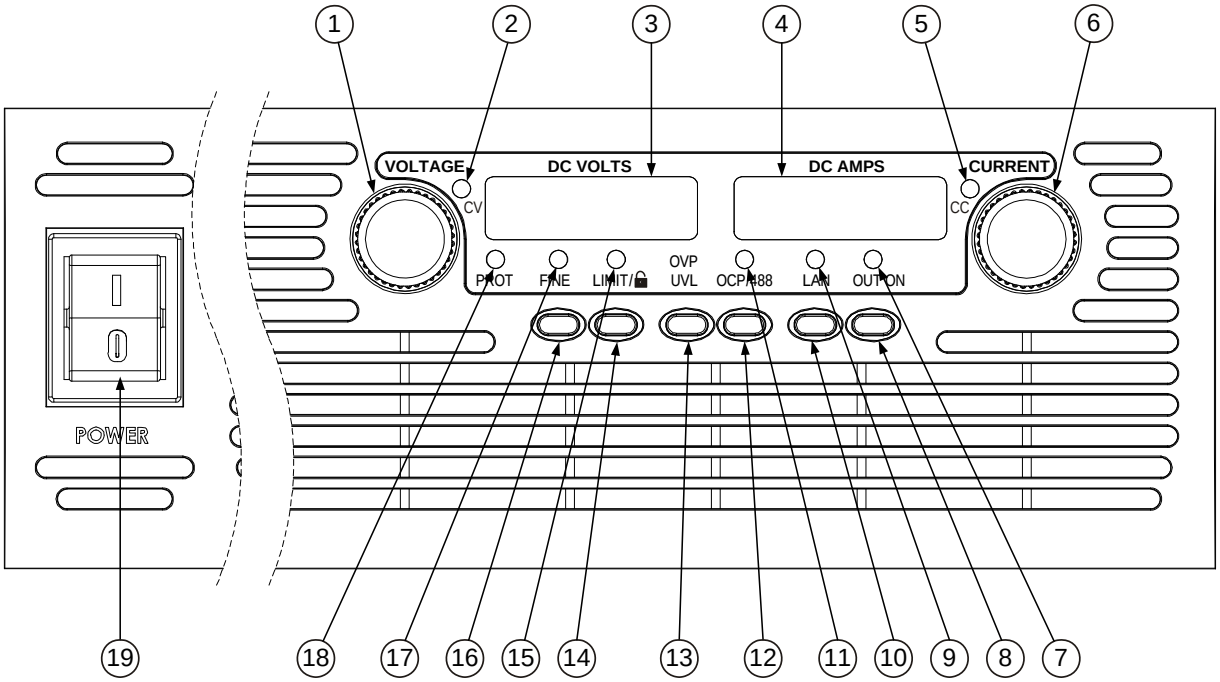

1 – VOLTAGE knob

Voltage function: Adjusts the output voltage, the over-voltage protection level, and the under-voltage limit. If over-voltage protection or under-voltage limits have been set, you cannot program the output voltage outside those limits. Press the FINE button to set fine adjustment resolution.

GPIB address: Selects the GPIB address when OCP/488 is pressed and held.

2 – VOLTAGE indicator

Indicates the unit is in constant voltage mode – with the output voltage held constant.

3 – DC VOLTS display

Normally displays the voltage measured at the sense terminals.

- Indicates the programmed voltage setting when the LIMIT button is pressed.
- Indicates either the OVP or UVL setting when the OVP/UVL button is pressed.
- Indicates the GPIB address when the OCP/488 button is pressed and held.
- Indicates the IP and Ethernet address when the LAN button is pressed and held.

4 – DC AMPS display

Normally displays the current measured at the output terminals.

- Indicates the programmed current setting when the LIMIT button is pressed.
- Indicates the IP and Ethernet address when the LAN button is pressed and held.

5 – CURRENT indicator

Indicates the unit is in constant current mode – with the output current held constant.

6 – CURRENT knob

Adjusts the output current. Press the FINE button to set fine adjustment resolution.

7 – OUT ON indicator

Indicates the output is enabled or on.

8 – OUT ON button

Output function: Press the OUT ON button to turn the output on or off. Press the OUT ON button to reset the unit and return the output to on after an OVP or OCP event.

Start-Up function: Press and hold the OUT ON button to toggle between the Safe-Start and Auto-Restart modes. The display cycles between SAF and AU7. Releasing the OUT ON button while one of the modes is displayed selects that mode.

9 – LAN indicator Indicates the LAN has been configured and is operating normally. Set another unit on the N8700 unit's Web home page and the LAN indicator blinks to identify that unit.

10 – LAN button View address: Press the LAN button to view the IP and Ethernet address. The display first scrolls through the four segments of the IP address, followed by the six segments of the Ethernet (EA) address. Press any key to turn the address display off.

Reset address: Press and hold the LAN button for three seconds. Pressing the LAN button again while the message "LAn rES" is displayed resets the LAN configuration to the factory-shipped settings (see chapter 4 for settings). The display returns to normal and the configuration is not changed if the LAN button is not pressed again.

11 – OCP/488 indicator Indicates over-current protection is enabled or on.

12 – OCP/488 button Enable OCP: Press the OCP/488 button to turn over-current protection on. Press the OCP/488 button again to turn over-current protection off.

Reset OCP: Press the OUT ON button to enable the output and re-arm over-current protection following an over-current protection event.

GPIB address: Press and hold the OCP/488 button for three seconds to set the GPIB address with the Voltage knob.

13 – OVP/UVL button OVP function: Press the OVP/UVL button once to set the over-voltage protection level with the Voltage knob (the display shows OUP). You cannot set the over-voltage protection lower than about 5% above the present output voltage setting.

UVL function: Press the OVP/UVL button twice to set the under-voltage programming limit with the Voltage knob (the display shows UUL). You cannot set the under-voltage protection higher than about 5% below the present output voltage setting.

14 – LIMIT button Limit function: Press the LIMIT button to display the output voltage and current limit. Settings are shown on the display for five seconds then the display returns to show the actual output voltage and current.

Lock function: Press and hold the LIMIT button to toggle between 'Locked' front panel (LFP) and 'Unlocked' front panel (UFP). The display will cycle between LFP and UFP. Releasing the LIMIT button while one of the modes is displayed selects that mode. If the display indicates rLFP, the front panel has been locked by a remote programming command.

15 – LIMIT indicator Indicates the LIMIT button is pressed.

16 – FINE button Sets Fine or Coarse adjustment control for the Voltage and Current knobs.
Press the FINE button to set Fine mode; press again to return to Coarse mode.
- Fine mode: Knobs operate with high resolution.
- Coarse mode: Knobs operate with lower resolution (approximately six turns).

17 – FINE indicator Indicates the unit is in the high resolution 'Fine' adjustment mode.

18 – PROT indicator Blinks when a fault has occurred.
OVP, OCP, OTP, Enable fail, and AC fail detection will cause the PROT (protection) indicator to blink. The PROT indicator may blink and the display will indicate AC for a few seconds after the unit is turned off because of residual energy inside the unit.

19 – POWER switch Turns the power supply on or off.

The Rear Panel – At a Glance

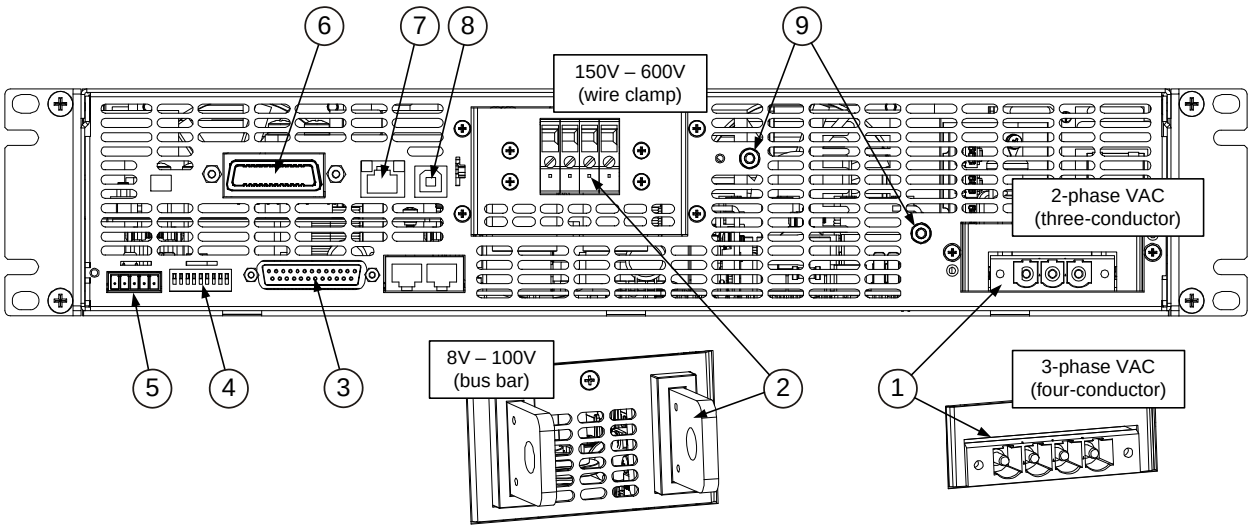

1 – AC input connector Header with mating wire clamp plug-in connector for both the 3.3 kW and 5 kW output models: 3-conductor for 2-phase VAC, or 4-conductor for 3-phase VAC is provided. Plug-in connector is secured to header by screws.

2 – DC output connector Wire clamp connector for 150V, 300V and 600V models. Bus bars for 8V to 100V models.

3 – Analog programming connector Connector for the analog interface. Includes output voltage and current limit programming and monitoring signals, Shut-Off control (electrical signal), Enable/Disable control (dry-contact), power supply ok (Power Supply OK) signal and operation mode (CV/CC) signal. (See next page for details)

4 – SW1 setup switch Nine-position switch for selecting remote programming and monitoring modes for Output Voltage, Current Limit and other control functions. (See next page for details)

5 – Remote Sense connector Connector for making remote sensing connections for regulating the load voltage and compensating for wiring voltage drop. (See next page for details)

6 – GPIB connector Connector for connecting to a GPIB interface. See chapter 4 for setup.

7 – LAN connector Connector for connecting to a LAN interface. LINK LED indicates link integrity. TX LED indicates LAN activity. See chapter 4 for LAN setup.

8 – USB connector Connector for connecting to a USB interface. See chapter 4 for setup.

9 – Ground screw & nut M4x8 screws with nut for making chassis ground connections

WARNING **SHOCK HAZARD The AC power cable provides a chassis ground through the ground conductor. Be certain that your power source is three-conductor for 2-phase models or four-conductor for 3-phase models with the ground conductor (green/yellow) connected to earth ground.**

J2 Sense Connector

1 – Remote sense (+)
2 – Local sense (+)
3 – Not used
4 – Local sense (–)
5 – Remote sense (–)

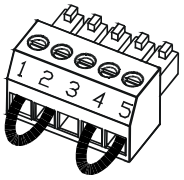

The factory-shipped configuration is shown in the figure.

SW1 Setup Switch

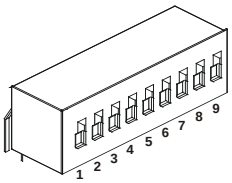

The factory-shipped setting is Down for all switches.

1 – Output voltage, voltage programming	Down: The output voltage is programmed by the front panel. Up: The output voltage is programmed by the external voltage signal.
2 – Output current, voltage programming	Down: The output current is programmed by the front panel. Up: The output current is programmed by the external voltage signal.
3 – Programming range (voltage/resistance)	Down: The remote programming range is: 0 – 5V / 0 – 5KΩ. Up: The remote programming range is: 0 – 10V / 0 – 10KΩ.
4 – Voltage and Current monitoring range	Down: The remote monitoring range is: 0 – 5V. Up: The remote monitoring range is: 0 – 10V.
5 – Shut-Off Logic Select	Down: OUT OFF = Low (0 – 0.6V) or short; OUT ON = High (2V – 15V) or open. Up: OUT OFF = High (2V – 15V) or open; OUT ON = Low (0 – 0.6V) or short.
6 – Not Used	
7 – Output voltage, resistive programming	Down: The output voltage is programmed by the front panel. Up: The output voltage is programmed by the external resistor.
8 – Output current, resistive programming	Down: The output current is programmed by the front panel. Up: The output current is programmed by the external resistor.
9 – Enable/Disable control	Down: The J1 Enable+/Enable– pins are not active. Up: The J1 Enable+/Enable– pins are active.

J1 Analog Programming Connector

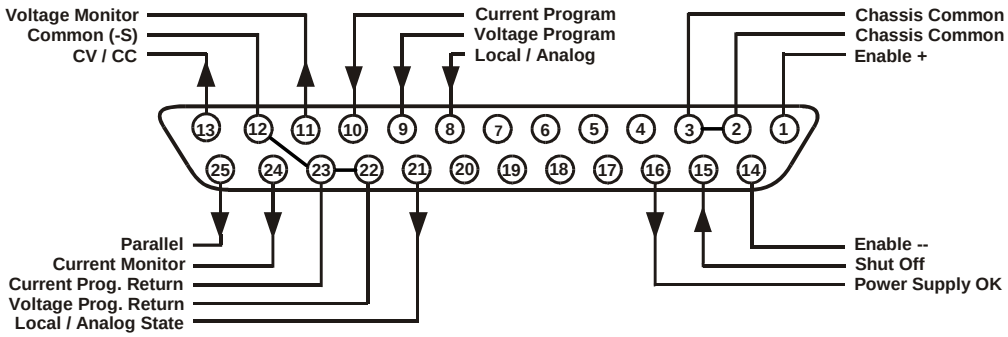

The factory-shipped default configuration is Local operation, which does not require connection to J1.

Pin 1:	**Enable +**	Connect Pin 1 to Pin 14 to enable the output. Disconnect to disable the output.
Pin 2, 3:	**Chassis Common**	Signal return for Pin 15 and Pin 16. Connected to chassis.
Pin 4–7:	**Not Used**	No connection
Pin 8:	**Local/Analog**	Input for selecting between front panel or analog programming of the output.
Pin 9:	**Voltage Program**	Input for voltage or resistance programming of the output voltage.
Pin 10:	**Current Program**	Input for voltage or resistance programming of the output current.
Pin 11:	**Voltage Monitor**	Output for monitoring the output voltage.
Pin 12:	**Common**	Signal return for Pin 8, Pin11, Pin 13, and Pin 24. Connected internally to –S.
Pin 13:	**CV/CC**	Output for constant voltage/constant current mode indication.
Pin 14:	**Enable –**	Connect Pin 14 to Pin 1 to enable the output. Disconnect to disable the output.
Pin 15:	**Shut Off**	Input for Shut-Off control of the output. Referenced to Chassis Common.
Pin 16:	**Power Supply OK**	Output to indicate the power supply status. Referenced to Chassis Common.
Pin 17–20:	**Not Used**	No connection
Pin 21:	**Local/Analog State**	Output for indication of local or analog programming mode.
Pin 22:	**Voltage Prog. Return**	Signal return for Pin 9. Connected internally to –S.
Pin 23:	**Current Prog. Return**	Signal return for Pin 10. Connected internally to –S.
Pin 24:	**Current Monitor**	Output for monitoring the output current.
Pin 25:	**Parallel**	Output for current balancing in parallel operation.



2 Installation



General Information 16
Inspecting the Unit 16
Installing the Unit 17
Connecting the Line Cord 19
Connecting the Load 22
Output Voltage Sensing 26
Load Considerations 28
Parallel Connections 30
Series Connections 32
J1 Connector Connections 34

This chapter describes how to install your power supply. It discusses installation, rack mounting, and line cord connections.

This chapter also discusses how to connect your load to the output terminals. It discusses what you need to know about wire sizes and how to compensate for voltage drops in the load leads. It also discusses various loads configurations and how to connect units in series and parallel.

Before getting started, check the list under “Items Supplied” and verify that you have received these items with your instrument. If anything is missing, please contact your nearest Agilent Sales and Service Office.

General Information

Models

3.3 kW Models	5 kW Models
N8731A – N8739A	N8754A – N8759A
N8740A – N8742A	N8760A – N8762A

Items Supplied

Item	Description
Power Cord	A power cord appropriate for your location. Units are supplied with unterminated power cords.
Strain relief assembly	A strain relief assembly for unterminated power cords.
AC input cover	A cover for the AC input on which the strain relief assembly is mounted.
Analog connector	A DB25 subminiature connector plug for analog control connections.
Shield assembly	A safety shield appropriate for the output terminal connections (either wire clamp or bus bar).
Hardware	Nuts, washers, and bolts for connecting load leads to output bus bars (only used for 8V to 100V units).
Documentation Set	Contains User's Guide with Product Reference CD-ROM.
Certificate of Calibration	A certificate of calibration referenced to the serial number.
Automation-Ready CD-ROM	E2094N - contains Agilent IO Libraries Suite.

Accessories

Item	Description
N5740A	Rack-mount slide kit for installing in system II cabinets

Inspecting the Unit

When you receive your power supply, inspect it for any obvious damage that may have occurred during shipment. If there is damage, notify the shipping carrier and nearest Agilent Sales and Service Office immediately. Refer to Appendix C for more information.

Until you have checked out the power supply, save the shipping carton and packing materials in case the unit has to be returned.

Installing the Unit

Safety Considerations

This power supply is a Safety Class I instrument, which means it has a protective earth terminal. That terminal must be connected to earth ground through power source equipped with a ground receptacle. Refer to the Safety Summary page at the beginning of this guide for general safety information. Before installation or operation, check the power supply and review this guide for safety warnings and instructions. Safety warnings for specific procedures are located at appropriate places throughout this Guide.

Refer to all WARNINGS, CAUTIONS, and NOTES in the "Connecting the Line Cord" section prior to connecting the unit to an AC source.

Environment

WARNING **Do not operate the instrument in the presence of flammable gasses or fumes.**

The environmental conditions, dimensions of the instrument, as well as an outline diagram are given in Appendix A. The instrument should only be operated indoors in a controlled environment. Do not operate the power supply in an area where the ambient temperature exceeds +40°C.

NOTE Agilent N8700 power supplies generate magnetic fields, which may affect the operation of other instruments. If your equipment is susceptible to magnetic fields, do not position it adjacent to the power supply.

Airflow

Fans cool the power supply by drawing air through the front and exhausting it out the back. The instrument must be installed in a location that allows sufficient space of at least 10 cm (4 in) at the front and back of the unit for adequate air circulation.

Bench Installation

Attach the four plastic feet that are supplied with the unit when the instrument is mounted on a surface or when units are stacked without rack support. When using the plastic feet, a maximum of three units can be stacked. You must allow for free airflow into the front of the unit and out of the back of the unit. (see "Airflow").

WARNING **CONNECTION TO AC SOURCE The power supply must be connected to the AC mains through a protective device such as a circuit breaker or fuse with a rating as described under "Connecting the Line Cord". The line cord cannot be used as a disconnect device for the power supply.**

Rack Installation

CAUTION Ensure that the screws used to attach the rack slide kit do not penetrate more than 6 mm into the sides of the unit.

Do not block the air intake at the front, or the exhaust at the rear of the unit.

The Agilent N8700 power supplies can be mounted in a standard 19-inch rack panel or cabinet. They are designed to fit in two rack units (2U) of space. To install the power supply in a rack:

1. Use the front panel rack-mount brackets to install the power supply in the rack.

2. Use a support bracket to provide adequate support for the rear of the power supply.

3. Rack mount slides can be attached to the unit when installing the unit in a standard 19-inch equipment rack. Use the Agilent N5740A Rack-Mount Slide Kit and refer to the following figure for assembly instructions. Use three #10-32 x 3/8 in (max.) screws on each side. To prevent internal damage, use the specified screw length only.

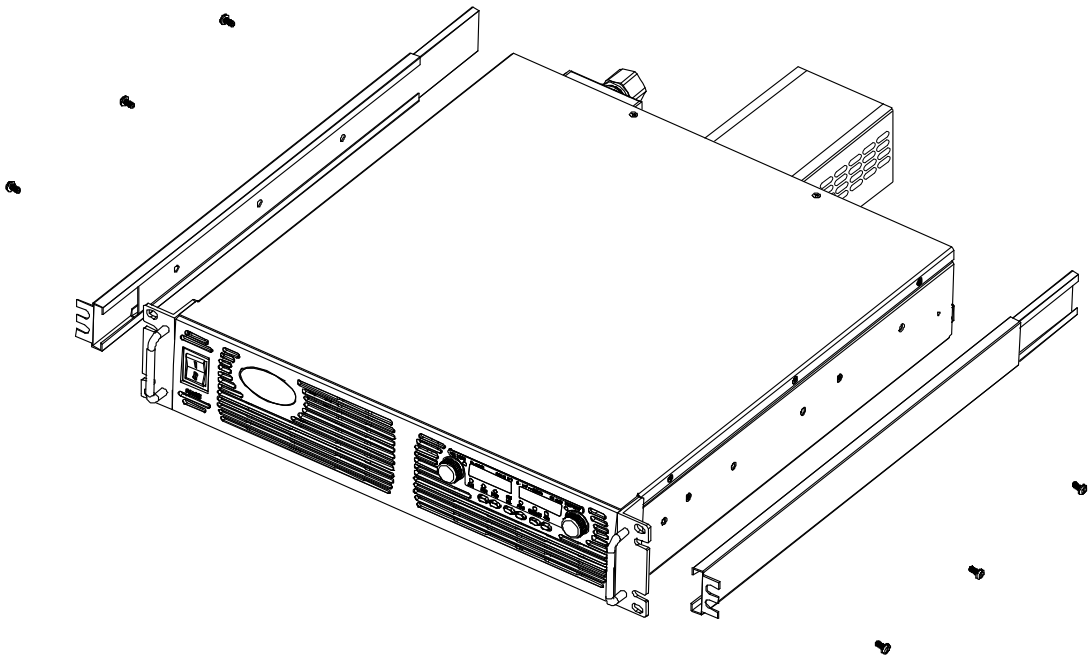

Cleaning

WARNING **SHOCK HAZARD To prevent electric shock, unplug the unit before cleaning.**

Use a dry cloth or one slightly dampened with water to clean the external case parts. Do not attempt to clean internally.

Connecting the Line Cord

WARNING **SHOCK HAZARD The power cable provides a chassis ground through the ground conductor. Be certain that the power cable has the ground conductor connected to earth ground at the source and instrument AC input connector.**

FIRE HAZARD Use only the power cable that was supplied with your instrument. Using other types of power cables may cause overheating of the power cable and result in fire.

WARNING **CONNECTION TO AC SOURCE The power supply must be connected to the AC mains through a protective device such as a circuit breaker or fuse with ratings as follows:**

For 2-phase models: 30A maximum per phase
For 3-phase models: 20A maximum per phase

CAUTION Connection of either a 3.3 kW or 5 kW power supply to an AC power source must be made by a qualified electrician in accordance with local electrical codes.

The POWER on/off switch is not the main disconnect device and does not completely disconnect all circuits from the AC source. A disconnect device, either a switch or circuit breaker for permanent or multi-phase configurations must be provided in the final installation.

The disconnect device must comply with UL/CSA/EN 61010-1 requirements. It shall be in close proximity to the equipment, shall be easily accessible, and shall be marked as the disconnect device for this equipment. The disconnect device must meet the input ratings requirements listed on the INPUT RATING label located on the top cover of each unit. Refer to "AC Input" In Appendix A for details.

One of the following unterminated power cables is provided with each unit. If required, connect an appropriate locking-type power plug to the end of the power cable.

Cable Option/Part no.	Description	Rating	Wire Size	Length	Approvals
OPT 831, p/n 8121-1949	3.3kW 2-phase	300V, 25 A, 60°C	3 x 10 AWG Note1,3	2.5 m	UL/CSA
OPT 832, p/n 8121-1331	3.3kW 2-phase	250V, 32 A, 60 °C	3 x 4 mm^2 Note1	2.5 m	Harmonized
OPT 861, p/n 8121-1946	3.3kW/5kW 3-phase (190-240 VAC nominal)	300V, 25 A, 90 °C	4 x 10 AWG Note2,3	2.5 m	UL/CSA
OPT 862, p/n 8121-1948	3.3kW/5kW 3-phase (380-415 VAC nominal)	450V, 20 A, 70 °C	4 x 2.5 mm^2 Note2	2.5 m	Harmonized

Note 1: 2-wire plus one green/yellow safety ground conductor

Note 2: 3-wire plus one green/yellow safety ground conductor

Note 3: 10 AWG corresponds to 4mm^2

Input Connections for 3.3 kW and 5 kW units

The AC input connector is located on the rear panel. It is a 3-terminal wire clamp for 3.3 kW 2-phase units, or a 4-terminal wire clamp for 3.3 kW and 5 kW 3-phase units. Input voltage and current ratings are as follows:

Unit	Nominal AC Input	Input Current @ 100% load	Frequency
3.3 kW 2-phase	190 – 240 VAC	23 – 24 A max.	50/60 Hz
3.3 kW 3-phase	190 – 240 VAC	13.6 – 14.5 A max.	50/60 Hz
	380 – 415 VAC	6.8 – 7.2 A max.	50/60 Hz
5 kW 3- phase	190 – 240 VAC	21 – 22 A max.	50/60 Hz
	380 – 415 VAC	10.5 – 12 A max.	50/60 Hz

NOTE You cannot change line voltage rating of the unit. Units must be returned to the factory for modification if the line voltage rating does not match the ac source.

Connect the cable to the AC input connector as follows:

1. Strip the outside insulation of the AC cable approximately 10 cm (4 in). Trim the wires so that the green/yellow ground wire is 10 mm (0.4 in) longer than the other wires. Strip 14 mm (0.55 in) at the end of each of the wires.
2. Unscrew the base of the strain relief from the wire compression nut. Place the locknut inside the AC input cover with the flat side of the nut against the cover. Insert the base through the outside opening of the AC input cover. Screw the base securely onto the locknut from the outside (17 ft-lbs).
3. Slide the wire compression nut over the AC cable. Insert the stripped wires through the strain relief base until the outer cable jacket is flush with the inside edge of the base. Place a wrench on the base to keep it from turning. Now tighten the compression nut to the base (14-16.2 ft-lbs) while holding the cable in place. The cable is now securely fastened inside the strain relief. Refer to the following figure.

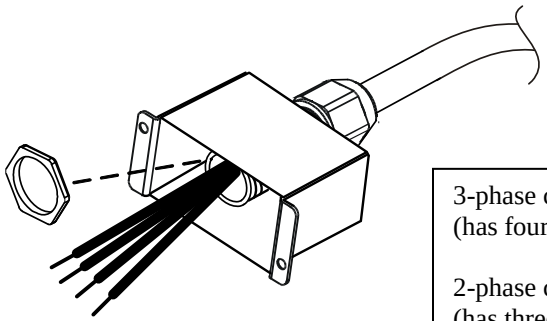

3-phase cable shown (has four conductors)

2-phase cable not shown (has three conductors)

4 Route the AC wires to the input connector terminals as required. To connect the wires, loosen the terminal screw, insert the stripped wire into the terminal, and tighten the screw securely to between 4.4–5.3 in-lbs (for 3.3 kW models) or 10.7–13.4 in-lbs (for 5 kW models). Ensure that you have the green/yellow ground conductor connected to the ground terminal on the connector. Plug the connector onto the rear panel header and secure with the side screws.

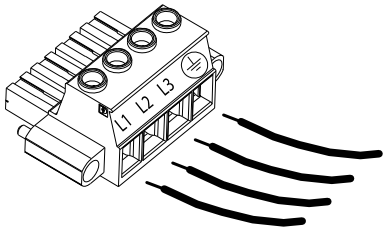

3-phase AC Input Connector
3 AC line conductors
1 ground conductor
Screw tightening torque:
4.4 – 5.3 in-lbs (0.5 – 0.6 Nm) for 3.3 kW models
10.7 – 13.4 in-lbs (1.2 – 1.5 Nm) for 5 kW models

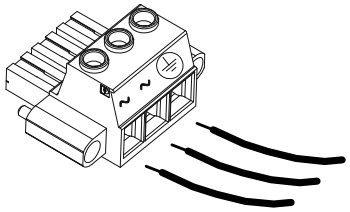

2-phase AC Input Connector
2 AC line terminals
1 ground terminal
Screw tightening torque:
4.4 – 5.3 in-lbs (0.5 – 0.6 Nm) for 3.3 kW models
(not used on 5 kW models)

5 Route the wires inside the cover to prevent pinching while sliding the cover towards the rear panel for attachment. Fasten the cover to the unit using the M3 x 8mm flat head screws provided (4.8 in-lbs). Refer to the following figure for details.

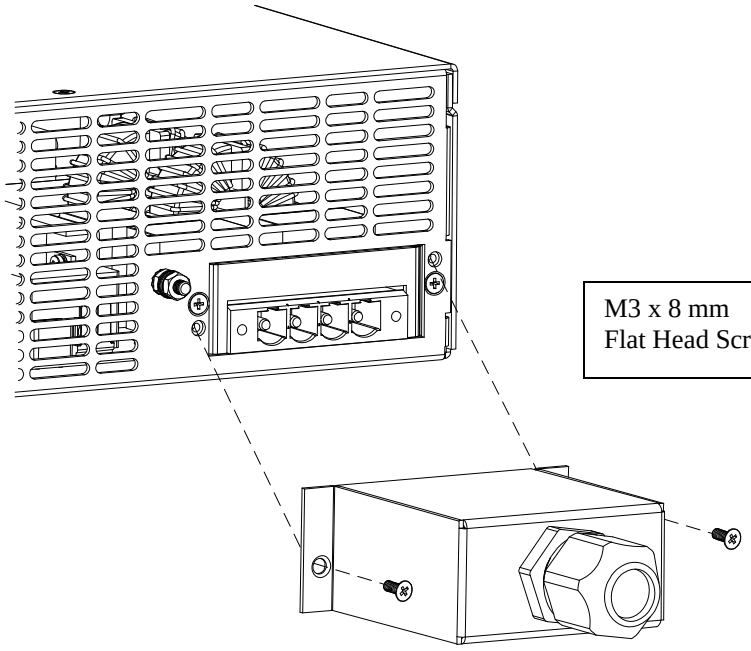

M3 x 8 mm
Flat Head Screws

Connecting the Load

WARNING **SHOCK HAZARD Turn off AC power before making rear panel connections. Wires and straps must be properly connected and screws securely tightened.**

The following factors should be considered when selecting wiring to connect the load to the power supply:

- Current carrying capacity of the wire
- Insulation rating of the wire should be at least equivalent to the maximum output voltage of the power supply
- Load wire voltage drop
- Noise and impedance effects of the load wiring

Wire Size

WARNING **FIRE HAZARD To satisfy safety requirements, load wires must be large enough not to overheat when carrying the maximum short-circuit current of the power supply. If there is more than one load, then any pair of load wires must be capable of safely carrying the full-rated current of the supply.**

Paralleled load wires may be required for larger-ampacity power supplies.

The following table lists the characteristics of AWG (American Wire Gauge) copper wire.

AWG	**equivalent area in mm^2**	**nearest Metric wire size**	**Ampacity** Note 1	**Resistance** (Ω/1000 feet) Note 2
18	0.823	1.0 mm^2	14	6.385
16	1.31	1.5 mm^2	18	4.016
14	2.08	2.5 mm^2	25	2.526
12	3.31	4 mm^2	30	1.589
10	5.26	6 mm^2	40	0.9994
8	8.37	10 mm^2	60	0.6285
6	13.30	16 mm^2	80	0.3953
4	21.15	25 mm^2	105	0.2486
2	33.62	35 mm^2	140	0.1564
1/0	53.48	70 mm^2	195	0.0983
2/0	67.43	70 mm^2	225	0.0779
3/0	84.95	95 mm^2	260	0.0618

Note 1. Ampacity is based on 30 °C ambient temperature with the conductor rated at 60 °C. For ambient temeratures other than 30 °C, multiply the above ampacities by the following constants:

Temp (°C)	**Constant**	**Temp (°C)**	**Constant**
21-25	1.08	31-35	0.91
26-30	1.00	36-40	0.82

Note 2. Resistance is nominal at 20 °C wire temperature.

Along with conductor temperature, you must also consider voltage drop when selecting wire sizes. Although the power supply will compensate for up to 5 volts in each load wire, it is recommended to minimize the voltage drop to less than 1 volt to prevent excessive output power consumption from the power supply and poor dynamic response to load changes.

Load Connections for 8V to 100V Models

WARNING **SHOCK HAZARD Hazardous voltages may exist at the outputs and the load connections when using a power supply with a rated output greater than 40V. To protect personnel against accidental contact with hazardous voltages, ensure that the load and its connections have no accessible live parts. Ensure that the load wiring insulation rating is greater than or equal to the maximum output voltage of the power supply.**

CAUTION Ensure that the load wiring mounting hardware does not short the output terminals. Heavy connecting cables must have some form of strain relief to prevent loosening the connections or bending the bus-bars.

All load wires should be properly terminated with wire terminals securely attached. Do not use unterminated wires for load connections at the power supply. The following figures illustrate how to connect the load wires to the power supply bus-bars as well as how to mount the bus-bar shield to the chassis. Attach the wire terminals to the *inside* of the bus-bars to ensure enough space for inatalling the shield.

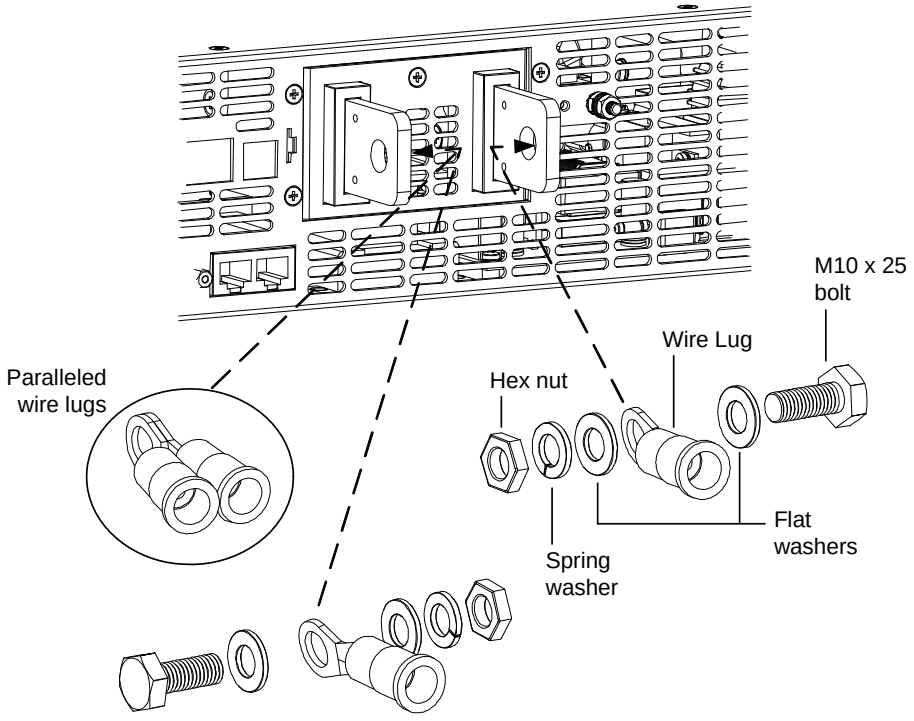

Install the shield after you have finished connecting the load wires. Route the load wires through the openings in the back of the shield. If necessary, use diagonal cutters and remove the appropriate cut-outs for the larger sized wires as indicated in the following figure. Lock the shield into place using the tab on the left side and the screw on the right side. Screw tightening torque: 4.8-5.3 in-lb.

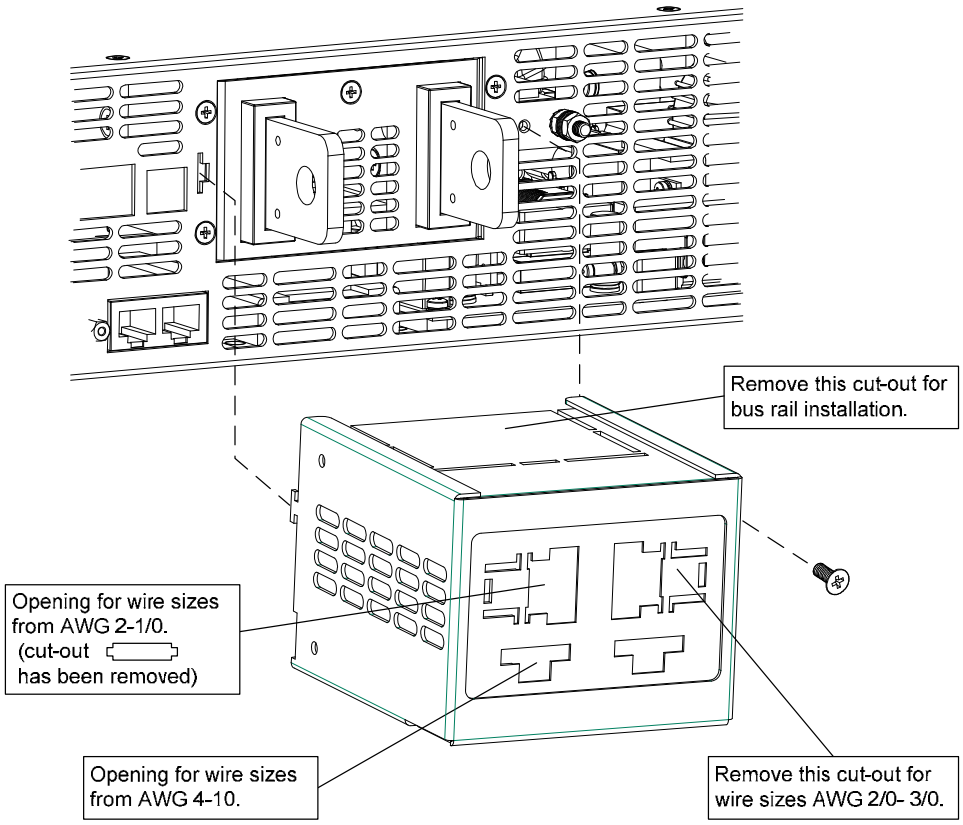

Load Connections for 150V, 300V and 600V Models

WARNING **SHOCK HAZARD Hazardous voltages may exist at the outputs and the load connections when using a power supply with a rated output greater than 40V. To protect personnel against accidental contact with hazardous voltages, ensure that the load and its connections have no accessible live parts. Ensure that the load wiring insulation rating is greater than or equal to the maximum output voltage of the power supply.**

The 150V, 300V and 600V models have a four-terminal wire clamp output connector. The two left terminals are the positive outputs and the two right terminals are the negative outputs. The connector specifications are as follows:

Wire Size:	AWG 18 to AWG 10 (1mm^2 to 4mm^2)
Stripping Length:	10 mm (0.39 in.)
Torque:	4.4 – 5.3 in-lb. (0.5 – 0.6Nm)

Connect load wires to the power supply output wire clamp connector as follows:

1 Strip wires back approximately 10 mm (0.39 in).

2 Loosen the connector terminal screws and insert the stripped wires into the terminal. Tighten the terminal screws securely.

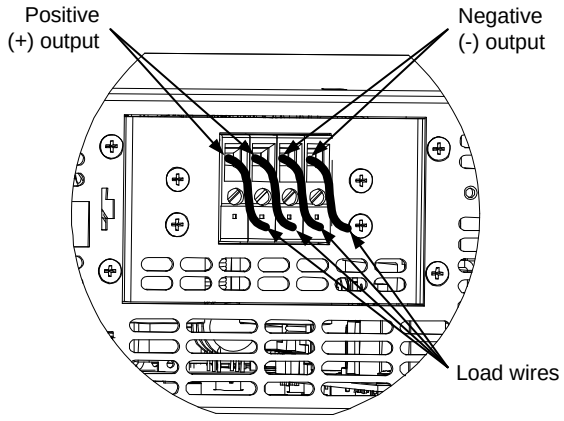

3 Loosen the chassis screw marked A and remove (save).

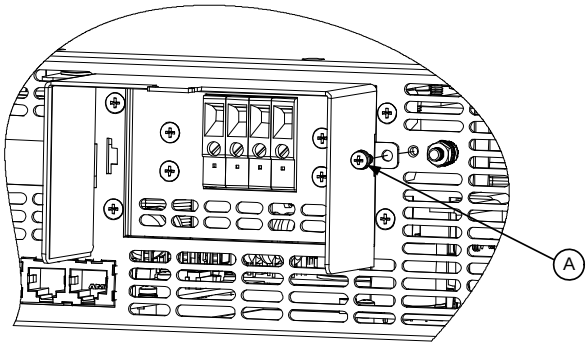

4 Slide the slotted tab on the protective shield's left side into the chassis slot and lock into place. Insert the right side shield screw A (previously removed) to fix the shield to the chassis. Screw tightening torque: 4.8-5.3 in-lb.

5 Route the load wires to the tab at the top of the shield. Ensure the wire length inside the shield is long enough to provide proper strain relief.

6 Attach the load wires to the notched shield tab using a tie-wrap or equivalent as shown in the following figure.

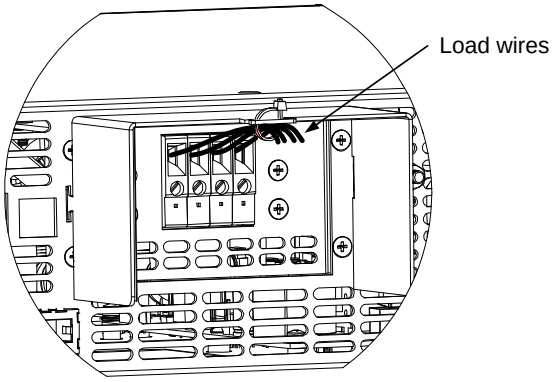

Output Voltage Sensing

WARNING **SHOCK HAZARD There is a potential shock hazard at the sense connector when using a power supply with a rated output greater than 40V. Ensure that the local sense and remote sense wiring insulation rating is greater than or equal to the maximum output voltage of the power supply. Ensure that the connections at the load end are shielded to prevent accidental contact with hazardous voltages.**

Local and remote sense connections are made at the J2 connector. The connector has a removable plug that makes it easy for you to make your wire connections. Refer to the following figure for the terminal assignments.

1 Remote sense (+)
2 Local sense (+)
3 Not connected
4 Local sense (-)
5 Remote sense (-)

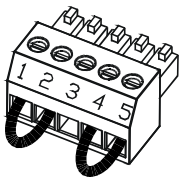

The J2 connector plug specifications are as follows:

Plug Type:	MC 1.5/5-ST-3.81, Phoenix
Wire Size:	AWG 28 to AWG 16
Stripping Length:	0.28 in. (7 mm)
Torque:	1.95 – 2.21 in-lb. (0.22 – 0.25 Nm)

Local Sensing

The power supply is shipped with the rear panel J2 sense connector wired for local sensing of the output voltage. With local sensing, the output voltage regulation is made at the output terminals. This method does not compensate for voltage drop on the load wires, therefore it is recommended only for low load current applications or where the load regulation is less critical. The following figure illustrates the internal connections of the J2 connector.

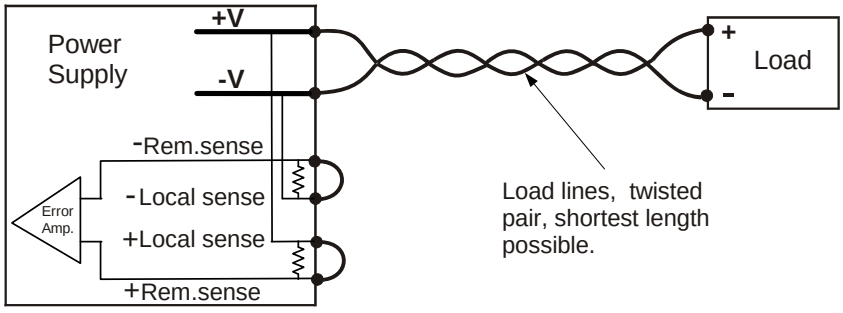

NOTE If the power supply is operated without the local sense jumpers or without the remote sense lines connected, it will continue to work, but the output voltage regulation will be degraded. Also, the OVP circuit may activate and shut down the power supply. Note that the internal wiring between +V and + local sense and between –V and – local sense will fail if load current flows through it.

Remote Sensing

Use remote sensing in applications where load regulation at the load is critical. Remote sensing allows the power supply to automatically compensate for the voltage drop in the load leads. Refer to Appendix A for the maximum allowable voltage drop on the load wires.

Remote sensing is especially useful in constant voltage mode with load impedances that vary or have significant lead resistance. It has no effect in constant current mode. Because sensing is independent of other power supply functions it can be used regardless of how the power supply is programmed. With remote sensing, voltage readback monitors the load voltage at the remote sense points.

Use twisted or shielded wires to minimize noise pick-up. If shielded wires are used, the shield should be connected to the ground at one point, either at the power supply chassis or the load ground. The optimal point for the shield ground should be determined by experimentation.

To configure the power supply for remote sensing:

- Turn off the power supply.
- Remove the local sense jumpers from the J2 connector.
- Connect the negative sense lead to terminal 5 (-S) and the positive sense lead to terminal 1 (+S). Make sure that the connector plug is securely inserted into the connector body.
- Turn on the power supply.

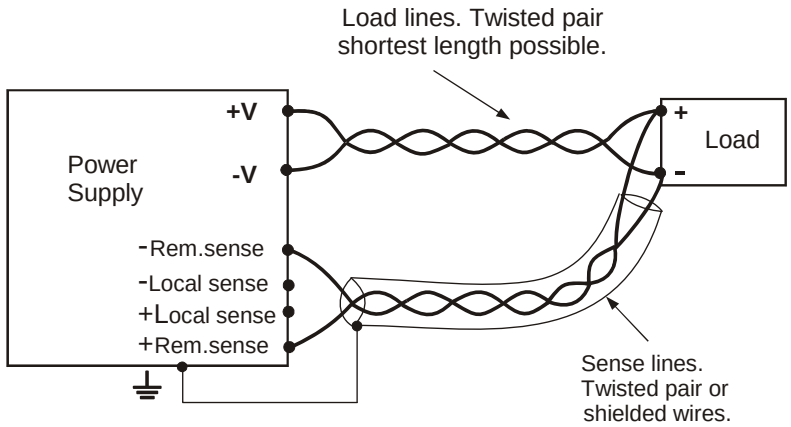

NOTE If the power supply is operated with remote sensing and either the positive or negative load wire is not connected, an internal protection circuit will activate and shut down the power supply. To resume operation, turn the power supply off, connect the open load wire, and turn on the power supply.

Load Considerations

Multiple Loads

The following figure shows multiple loads connected to one power supply. Each load should be connected to the power supply's output terminals using separate pairs of wires. It is recommended that each pair of wires will be as short as possible and twisted or shielded to minimize noise pick-up and radiation. The sense wires should be connected to the power supply output terminals or to the load with the most critical load regulation requirement.

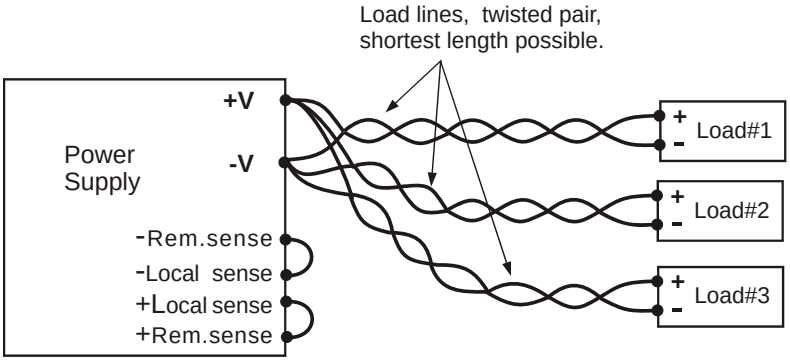

If remotely located distribution terminals are used, as shown in the following figure, the power supply output terminals should be connected to the remote distribution terminals by a pair of twisted and/or shielded wires. Connect each load to the distribution terminals separately. Remote voltage sensing is recommended under these circumstances. Sense either at the remote distribution terminals or, if one load is more sensitive than the others, directly at the critical load.

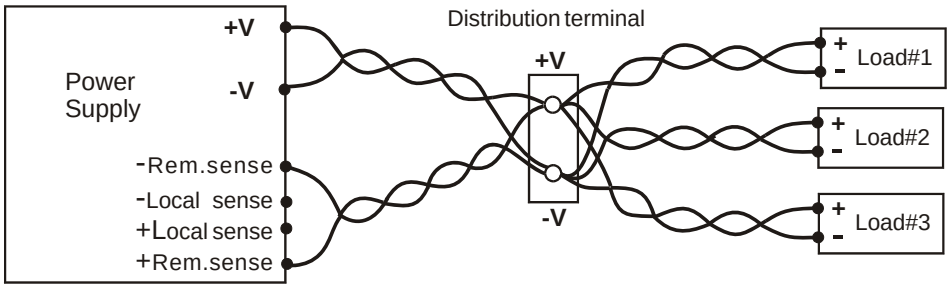

Output Noise and Impedance Effects

To minimize the noise pickup or radiation, the load wires and remote sense wires should be twisted-pairs to the shortest possible length. Shielding of sense leads may be necessary in high noise environments. Where shielding is used, connect the shield to the chassis via a rear panel ground screw. Even if noise is not a concern, the load and remote sense wires should be twisted-pairs to reduce coupling, which might impact the stability of power supply. The sense leads should be separated from the power leads.

Twisting the load wires reduces the parasitic inductance of the cable, which could produce high frequency voltage spikes at the load and the output because of current variation in the load itself.

The impedance introduced between the power supply output and the load could make the ripple and noise at the load worse than the noise at the power supply rear panel output. Additional filtering with bypass capacitors at the load terminals may be required to bypass the high frequency load current.

Inductive Loads

Inductive loads can produce voltage spikes that may be harmful to the power supply. A diode should be connected across the output. The diode voltage and current rating should be greater than the power supply maximum output voltage and current rating. Connect the cathode to the positive output and the anode to the negative output of the power supply.

Where positive load transients such as back EMF from a motor may occur, connect a surge suppressor across the output to protect the power supply. The breakdown voltage rating of the suppressor must be approximately 10% higher than the maximum output voltage of the power supply.

Grounding the Output

The output of the power supply is isolated from earth ground. Either positive or negative voltages can be obtained from the output by grounding (or "commoning") one of the output terminals. Always use two wires to connect the load to the output regardless of where or how the system is grounded.

To avoid noise problems caused by common-mode current flowing from the load to ground, it is recommended to ground the output terminal as close as possible to the power supply chassis ground.

WARNING **SHOCK HAZARD**

For models up to 60 VDC rated output, no point on the output shall be more than ±60 VDC above or below chassis ground.

For models greater than 60 VDC rated output, no point on the Positive output shall be more than ±600 VDC above or below chassis ground.

For models greater than 60 VDC rated output, no point on the Negative output shall be more than ±400 VDC above or below chassis ground.

Parallel Connections

CAUTION Only power supplies that have identical voltage and current ratings can be connected in parallel.

Up to four units of the same voltage and current rating can be connected in parallel to provide up to four times the output current capability. Refer to the following figures for typical connections of parallel power supplies using either local or remote sensing. The figures show two units, however, the same connection method applies for up to four units.

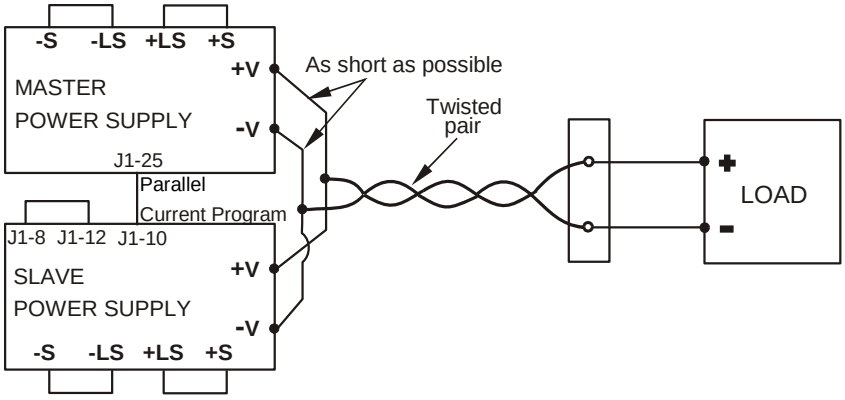

Local Sensing

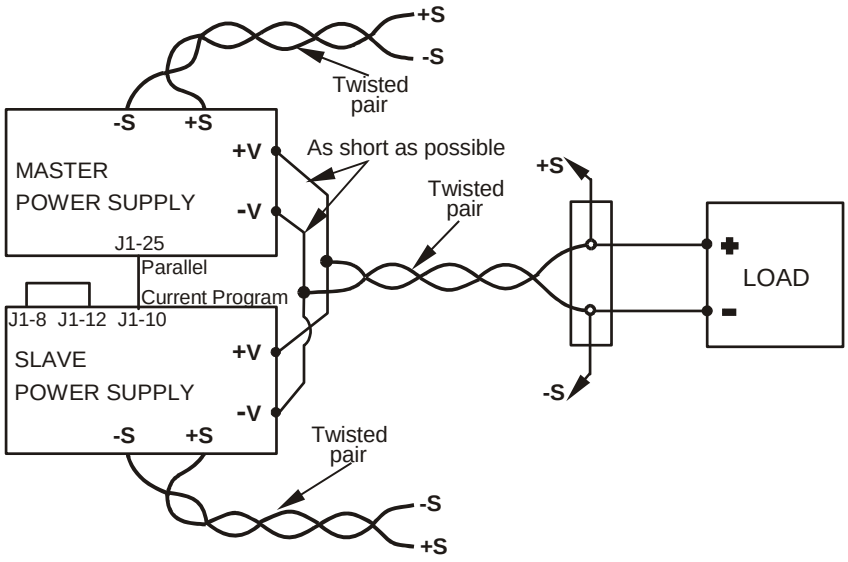

Remote Sensing

One of the units operates as a master and the remaining units are slaves. The slave units operate as controlled current sources following the master output current. In remote operation, only the master unit can be programmed by the computer while the slave units may be connected to the computer for voltage, current and status readback only.

It is recommended that each unit supplies only up to 95% of its current rating because of the imbalance that may be caused by cabling and connections voltage drops.

Setting up the Master Unit

Connect the sensing circuit for either local or remote sensing as shown in the previous figures. Set the master unit output voltage to the desired voltage. Program the current limit to the desired load current limit divided by the number of parallel units. During operation, the master unit operates in constant voltage mode, regulating the load voltage at the programmed output voltage.

Setting up the Slave Units

Set the rear panel setup switch SW1 position 2 to it's up position. Connect J1 pin 10 (Current Program) of the slave unit to J1 pin 25 (Parallel) of the master unit. Also connect a short between J1 pin 8 and J1 pin 12. The output voltage of the slave units should be programmed **HIGHER** than the output voltage of the master unit to prevent interference with the master unit's control. The current limit of each unit should be programmed to the desired load current limit divided by the number of parallel units.

Setting the Over-Voltage Protection

The master unit OVP should be programmed to the desired OVP level. The OVP of the slave units should be programmed to a **HIGHER** value than the master. When the master unit shuts down, it programs the slave unit to zero output voltage. If a slave unit shuts down when its OVP is set lower than the master output voltage, only that unit shuts down and the remaining slave units will supply the entire load current.

Setting the Over-Current Protection

Over-current protection, if desired, **may only be used with the MASTER unit.** When the master unit shuts down, it programs the slave units to zero output voltage.

Series Connections

WARNING **SHOCK HAZARD**

For models up to 60 VDC rated output, no point on the output shall be more than ±60 VDC above or below chassis ground.

For models greater than 60 VDC rated output, no point on the Positive output shall be more than ±600 VDC above or below chassis ground.

For models greater than 60 VDC rated output, no point on the Negative output shall be more than ±400 VDC above or below chassis ground..

CAUTION Only power supplies that have identical voltage and current ratings can be connected in series.

Two units of the same voltage and current rating can be connected in series to provide up to two times the output voltage capability. Because the current is the same through each element in a series circuit, outputs connected in series must have equivalent current ratings. Otherwise, the higher rated output could potentially damage the lower rated output by forcing excessive current through it under certain load conditions. Refer to the following figures for typical series connections using either local or remote sensing.

It is recommended that diodes be connected in parallel with each output to prevent reverse voltage during start up sequence or in case one unit shuts down. Each diode should be rated to at least the rated output voltage and output current of the power supply.

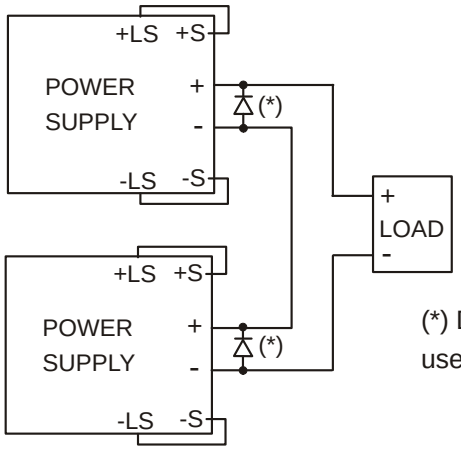

Local Sensing

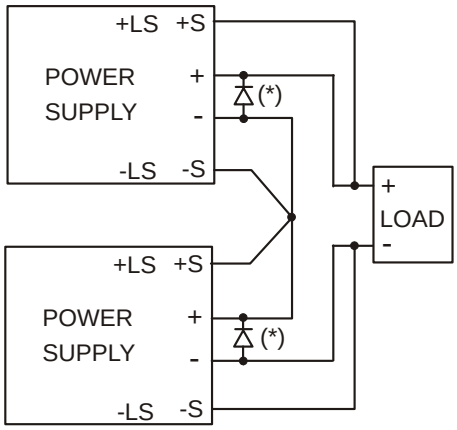

Remote Sensing

Refer to the following figure for typical connections of series power supplies configured as a positive and a negative output.

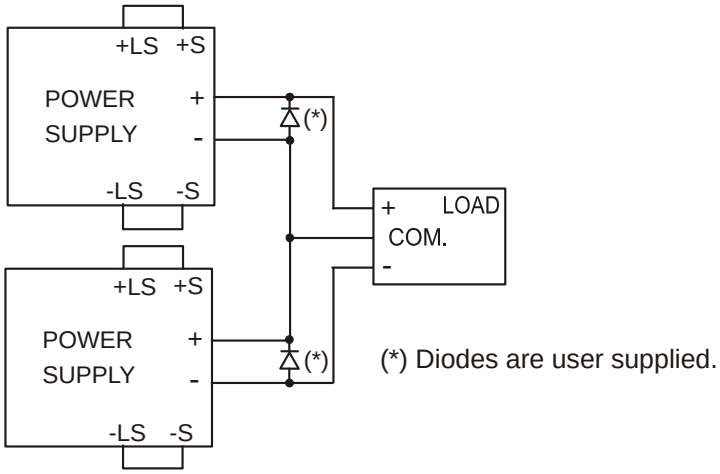

CAUTION This caution applies when using analog voltage programming with series-connected power supplies. The analog programming circuits of these power supplies are referenced to the negative sense (-S) potential. Therefore, the analog voltage circuits used to control each series-connected unit must be separated and floated from each other.

J1 Connector Connections

WARNING **SHOCK HAZARD There is a potential shock hazard at the J1 connector when using a power supply with a rated output greater than 40V. Ensure that the load wiring insulation rating is greater than or equal to the maximum output voltage of the power supply.**

External programming and monitoring signal are located on the J1 connector. The power supply is shipped with a mating plug that makes it easy for you to make your wire connections. It is essential to use this plastic-body plug to conform to safety agency requirements. If a shield is required for the J1 wires, connect the shield to the ground screw located on the power supply chassis.

Refer to the following figure for the pin assignments. A description of the pins is given in chapter 1.

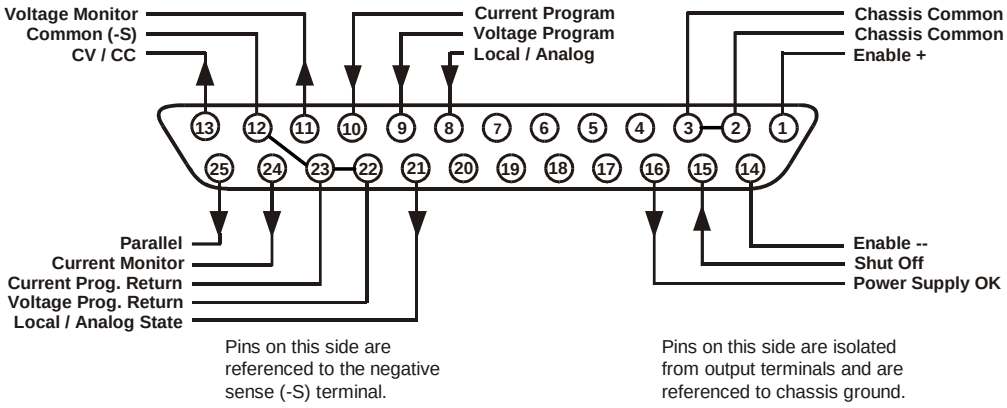

The mating plug specifications for the J1 connector are as follows:

Mating Plug:	AMP part number 745211-2
Wire Size:	AWG 26 to AWG 22
Extraction tool:	AMP part number 91232-1 or equivalent
Manual pistol grip tool:	Handle: AMP p/n 58074-1 Head: AMP p/n 58063-1

CAUTION Pins 12, 22 and 23 of J1 are connected internally to the negative sense (-S) potential of the power supply. Do not attempt to bias any of these pins relative to the negative output terminal. Use an isolated, ungrounded, programming source to prevent ground loops and to maintain the isolation of the power supply when programming from J1.

Chapter 3 describes how to configure the J1 connector when using it to program the output voltage and current.



3
Operating the Power Supply Locally

Turn-On Check-Out 36
Normal Operation 38
Protection Functions 39
Output On/Off Controls 42
Analog Programming of Output Voltage and Current 45

This chapter contains examples on how to operate your power supply from the front panel. A check-out procedure is included to let you verify that the power supply is operating properly. Additionally, information about programming the power supply using the J1 analog programming connector is also provided.

The simple examples discussed in this chapter show you how to program:

- output voltage and current functions
- protection functions
- output on/off functions
- safe-start and auto-restart
- analog programming of voltage and current
- front panel locking

Refer to chapters 4 and 5 for information on programming your power supply using SCPI commands.

Turn-On Check-Out

Before Check-Out

Ensure that the power supply is configured as follows:

- The unit is connected to an appropriate AC source as described in chapter 2.
- The POWER switch is in the off position.
- Sense connector pins 1 and 2 are jumpered; sense connector pins 4 and 5 are jumpered.
- All switches on Connector J2 are in the down position.

WARNING **SHOCK HAZARD Be aware that hazardous voltages can be present on the output terminals. Do not set the output voltage above 40 VDC during the turn-on check-out procedure.**

Constant Voltage Check

1. Turn the POWER switch on.
2. Turn the output on by pressing the OUT ON button. The green OUT ON indicator should be illuminated.
3. The green CV indicator should also be illuminated. If the CC indicator is illuminated, rotate the current knob until the CV indicator becomes illuminated.
4. Rotate the voltage knob while observing the DC VOLTS display. The output voltage should vary while the knob is turned. The voltage range is from zero to the maximum rated output for the power supply model.

OVP Check

1. Rotate the voltage knob and set the output voltage of the unit to 50% of its full-scale rating or 30 volts, whichever is lower.
2. Press the OVP/UVL button once so that the DC AMPS display indicates OUP. The DC VOLTS display shows the OVP level.
3. Use the voltage knob and set the OVP level of the unit to 75% of its full-scale voltage rating or 40 volts, whichever is lower.
4. Wait a few seconds until the DC VOLTS display returns to show the output voltage.
5. Use the voltage knob and raise the output voltage of the unit until it approaches the OVP setting. Check to make sure that the output voltage cannot be set higher than the OVP setting.
6. Press the OVP/UVL button again. Rotate the voltage knob and reset the OVP level of the unit to its maximum setting.

UVL Check

1. Press the OVP/UVL button twice so that the DC AMPS display indicates UUL. The DC VOLTS display shows the UVL level.
2. Use the voltage knob and set the UVL level of the unit to 50% of its full-scale voltage rating or 30 volts, whichever is lower.
3. Wait a few seconds until the DC VOLTS display returns to show the output voltage.
4. Use the voltage knob and lower the output voltage of the unit until it approaches the UVL setting. Check to make sure that the output voltage cannot be set lower than the UVL setting.
5. Press the OVP/UVL button twice. Rotate the voltage knob and reset the UVL level of the unit to its minimum setting.

Constant Current Check

1. Turn the POWER switch off. Wait a few seconds until the AC indicator on the front panel goes out.
2. Use a heavy wire and short the +V and –V output terminals together.
3. Turn the POWER switch on.
4. Turn the output on by pressing the OUT ON button. The green OUT ON indicator should be illuminated. The green CC indicator should be also illuminated.
5. Rotate the current knob while observing the DC AMPS display. The output current should vary while the knob is turned. The current range is from zero to the maximum rated output for the power supply model.

OCP Check

1. Rotate the current knob and set the current limit of the unit to about 10% of its full-scale current rating.
2. Press the OCP/488 button. This should trip the OCP protection. The OCP indicator should be illuminated, the DC VOLTS display should indicate OCP, and the Alarm indicator should be blinking.
3. Press the OCP/488 button again to cancel OCP protection. The DC VOLTS display should indicate OFF because the OCP protection is latched.
4. Press the OUT ON button to reset the OCP protection. The output should return to its previous setting.
5. Turn the POWER switch off.
6. Remove the short from the +V and –V output terminals.

Normal Operation

The power supply has two basic operating modes: constant voltage and constant current mode. In constant voltage mode, the power supply regulates the output voltage at the selected value, while the load current varies as required by the load. In constant current mode, the power supply regulates the output current at the selected value, while the voltage varies as required by the load. The mode in which the power supply operates at any given time depends on the voltage setting, current limit setting, and the load resistance.

Constant Voltage Mode

When the power supply is operating in constant voltage mode, the CV indicator on the front panel illuminates.

Adjustment of the output voltage can be made when the output is enabled (On) or disabled (Off). When the output is enabled, simply rotate the voltage knob to program the output voltage.

When the output is disabled, press the LIMIT button and then rotate the voltage knob. The DC VOLTS display will show the programmed voltage for 5 seconds after the adjustment has been completed and then indicate OFF.

The voltage knob can be set to coarse or fine resolution. Press the FINE button to select finer resolution. The FINE indicator turns on.

NOTE If you cannot adjust the voltage to the value that you desire, the power supply may be operating at its current limit. Check the load condition and the current limit setting. Also, the voltage cannot be programmed lower than about 5% above the UVL setting, or higher than about 5% below the OVP setting.

Constant Current Mode

When the power supply is operating in constant current mode, the CC indicator on the front panel illuminates.

Adjustment of the output current limit can be made when the output is enabled (On) or disabled (Off). When the output is enabled and in constant current mode, simply rotate the current knob to program the current limit. If the output is in constant voltage mode, press the LIMIT button and then rotate the current knob. The DC AMPS display will show the programmed current for 5 seconds after the adjustment has been completed and then indicate the actual output current.

When the output is disabled, press the LIMIT button and then rotate the current knob. The DC AMPS display will show the programmed current for 5 seconds after the adjustment has been completed and then go blank because the output is off.

The current knob can be set to coarse or fine resolution. Press the FINE button to select finer resolution. The FINE indicator turns on.

CV/CC Mode Crossover

If the power supply is in constant voltage mode and the load current increases above the current limit setting, the power supply switches to constant current mode. If the load decreases below the current limit setting, the power supply switches to constant voltage mode.

CV/CC Signal

CAUTION Do not connect the CV/CC signal to a voltage source higher than 30 VDC. Always connect the CV/CC signal to the voltage source with a series resistor to limit the sink current to less than 10mA.

The CV/CC signal available on the J1 connector indicates the operating mode of the power supply. The CV/CC signal is an open collector output with a 30V parallel zener at J1 pin 13, referenced to common at J1 pin 12. J1 pin 12 is connected internally to the –S terminal. When the power supply operates in constant voltage mode, CV/CC output is open. When the power supply operates in constant current mode, CV/CC signal output is low (0 - 0.6V), with maximum 10 mA sink current.

Protection Functions

Over-Voltage Protection

The over-voltage protection protects against over-voltage conditions on the output. If the output voltage attempts to exceed the programmed limit in response to an analog programming signal or in the event of a power supply failure, the over-voltage protection circuit will protect the load by disabling the output. The voltage is monitored at the sense terminals, thus providing the protection level directly at the load. Upon detection of an over-voltage condition, the output is disabled, the display shows OVP, the PROT indicator blinks, and OV is set in the Questionable Condition status register.

Adjustment of the over-voltage setting can be made when the output is enabled (On) or disabled (Off). To set the OVP level, press the OVP/UVL button so that the display indicates OUP. The display will show the OVP setting. Rotate the voltage knob to adjust the OVP level. The display will show OVP and the setting value for another five seconds and then return to its previous state.

The OVP settings are limited at the minimum level to approximately 5% above the output voltage setting. Attempting to adjust the OVP below this limit will result in no response to the adjustment attempt. Refer to Appendix A for the maximum OVP settings.

Use one of the following methods to reset the OVP circuit after it activates. If the condition that caused the over-voltage shutdown is still present, the OVP circuit will turn the output off again.

1. Press the OUT ON button to turn the output on.
2. Turn the AC power off, wait a few seconds, and turn it on.
3. Turn the output off, then on again using the Shut Off pin on the J1 connector. This only applies in Auto-Restart mode.
4. If the OVP continues to trip, try lowering the output voltage below the OVP setting, or raising the OVP setting.

Under-Voltage Limit

The under-voltage limit prevents adjustment of the output voltage below a certain limit. The combination of UVL and OVP functions let you create a protection window for sensitive load circuitry.

Setting the UVL can be made when the output is enabled (On) or disabled (Off). To set the UVL level, press the OVP/UVL button twice, so that the display shows UUL. The display will show the UVL setting. Rotate the voltage knob to adjust the UVL level. The display will show UUL and the setting value for another five seconds and then return to its previous state.

The UVL settings are limited at the maximum level to approximately 5% below the output voltage setting. Attempting to adjust the UVL above this limit will result in no response to the adjustment attempt. The minimum UVL setting is zero.

Over-Current Protection

Over-current protection will shut down the power supply output if the load current exceeds the current limit setting. This protection is useful when the load is sensitive to an over-current condition.

To arm the over-current protection, press the OCP/488 button so that the OCP indicator illuminates. When armed, a transition from constant voltage to constant current mode will activate the over-current protection. When an over-current protection event occurs, the output is disabled, the display shows OCP, the PROT indicator blinks, and OC is set in the Questionable Condition status register.

Use one of the following methods to reset over-current protection after it activates. If the load current is still higher than the current limit setting, the over-current protection will be activated again.

1. Press the OUT ON button to turn the output on.
2. Turn the AC power off, wait a few seconds, and turn it on.
3. Turn the output off, then on again using the Shut Off pin on the J1 connector. This only applies in Auto-Restart mode.
4. Press the OCP/488 button to cancel over-current protection. The display will show OFF because OCP protection is latched. Press the OUT ON button to reset OCP. With this method, the over-current protection is disabled. If the load current is still higher than the current limit setting, the power supply will only attempt to limit the current at the current limit setting.

Over-Temperature Protection

The over-temperature protection circuit shuts down the power supply before the internal components can exceed their safe internal operating temperature. This can occur if there is a cooling fan failure. When an OTP condition occurs, the output is disabled, the display shows O7P, the PROT indicator blinks, and the OT status bit is set in the Questionable Condition status register. Resetting the OTP circuit can be automatic (non-latched) or manual (latched) depending on the Safe-Start or Auto-Restart mode.

In Safe-Start mode, the OTP circuit is latched. The display continues to show O7P and the PROT indicator continues to blink. To reset the OTP circuit, press the OUT ON button.

In Auto-Restart mode, the OTP circuit is non-latched. The power supply returns to its last setting automatically when the over-temperature condition is removed.

Power-Fail Protection

If the AC power stops briefly, but returns before the power supply has reset, the power-fail protection circuit trips and the PF status bit is set in the Questionable Condition status register. Resetting the power-fail protection can be automatic (non-latched) or manual (latched), depending on the Safe-Start or Auto-Restart mode.

In Safe-Start mode, the output of the power supply is Off, as specified by the reset state when AC power returns. In Auto-Restart mode, the power supply recovers its last settings when AC power returns.

Front Panel Lock-Out

The front panel controls can be locked to protect from accidental power supply parameter change. Press and hold the LIMIT button to toggle between Locked front panel and Unlocked front panel. The display will cycle between LFP and UFP. Releasing the LIMIT button while one of the modes is displayed, selects that mode.

In Unlocked front panel mode, the front panel controls are enabled to program and monitor the power supply parameters.

In Locked front panel mode, the VOLTAGE and CURRENT knobs, the OCP/488 button, and the OUT ON button are disabled

The power supply will not respond to attempts to use these controls. The display will show LFP to indicate that the front panel is locked. The OVP/UVL button remains active to preview the OVP and UVL setting. The LIMIT button also remains active to preview the output voltage and current setting or to unlock the front panel.

NOTE This function operates independently of the SCPI SYST:COMM:RLST command. If the front panel has been locked from the front panel, it cannot be unlocked by SYST:COMM:RLST. Conversely, if the front panel has been locked by SYST:COMM:RLST, it cannot be unlocked from the front panel.

Output On/Off Controls

The Output On/Off controls turn the power supply output on or off. This can be done with the front panel OUT ON button or from the rear panel J1 connector. With the output off, adjustments can be made to the power supply or the load without shutting off AC power.

OUT ON button

The OUT ON button can be pressed at any time to enable or disable the power supply output. When the output is disabled, the output voltage and current go to zero and the display shows OFF.

Safe-Start and Auto-Restart

The power supply can be programmed to have either the last operating settings (Auto-Restart) or the reset settings (Safe-Start) apply at turn-on. Press and hold the OUT ON button to select between Safe-Start and Auto-Restart modes. The display continuously cycles between SAF and AUT every three seconds. Releasing the OUT ON button while one of the modes is displayed, selects that mode.

In Safe-Start mode, the power supply turns on with the reset settings (see chapter 5 under "*RST"). The output is disabled and the output voltage and current are zero. This is the factory default.

In Auto-Restart mode, the power supply restores the operating settings that were saved when it was last turned off (see below). The output is either enabled or disabled according to its last setting.

Output On/Off state	UVL level
Output voltage setting	OCP setting
Output current setting	Locked/Unlocked front panel
OVP level	Start-up mode

Output Shut-Off Terminals

Output Shut-Off (SO) terminals are available on the J1 connector to enable or disable the power supply output. **This function is edge-triggered.** J1 pin 15 is the Shut-Off input, and pins 2 and 3, which are connected internally, are the signal common. All pins are optically isolated from the power supply output. The Shut-Off input accepts a 2.5V-to-15V signal or an open/short contact to enable or disable the output. The Shut-Off control logic is selected by SW1 setup switch 5.

When an on-to-off transition is detected at the Shut-Off input, the Shut-Off function enables or disables the output according to the signal level or the open/short applied to J1 pin 15. When the output has been disabled by the Shut-Off function, the display shows SO to indicate the output is disabled.

To re-enable the output after it has shut down, you must disable the Shut-Off signal. In Auto-Restart mode, operation resumes automatically. In Safe-Start mode the Shut-Off function is latched. You must also press the OUT ON button or send an OUTPut:PROTection:CLEar command to resume operation.

The Shut-Off function can be used to shut down multiple power supplies in a daisy-chain fashion as explained later in this chapter. It can also be used to reset the OVP and OCP as previously described.

SW1 switch 5	SO Signal Level	Output	Display
Down (default)	2 - 15V or Open	On	Voltage/Current
	0 – 0.4V or Short	Off	SO
Up	2 - 15V or Open	Off	SO
	0 – 0.4V or Short	On	Voltage/Current

NOTE Because this function is edge-triggered, it may not be triggered by every state change. For example, after applying AC power, the output will not be disabled by the Shut Off function if the Shut-Off input is in the shut-off state. This is because the unit has not detected an on-to-off signal transition.

Enable/Disable Terminals

CAUTION To prevent possible damage to the unit, do not connect the Enable + or Enable – terminals to the positive or negative output terminals.

Enable/Disable terminals are available on the J1 connector to enable or disable the power supply output. **This function is level-triggered.** Simply connect a switch or relay between J1 pins 1 and 14. This function is activated by SW1 setup switch 9.

These pins disable the output when they are opened. When the output is disabled, the PROT indicator on the front panel will blink.

To re-enable the output after it has shut down, you must short the Enable + and Enable – terminals. In Auto-Restart mode, operation resumes automatically. In Safe-Start mode the Enable/Disable function is latched. You must also press the OUT ON button or send an OUTPut:PROTection:CLEar command to resume operation.

SW1 switch 9	ENA+/ENA– pins	Output	Display	Prot Indicator
Down (default)	Not active	On	Voltage/Current	Off
Up	Opened	Off	ENA	Blinking
	Shorted	On	Voltage/Current	Off

Power Supply OK Signal

The Power Supply OK signal on the J1 connector indicates a fault condition in the power supply. J1 pin 16 is a TTL output signal. Pins 2 and 3, which are connected internally, are the signal common. All pins are optically isolated from the power supply output. With no fault, Power Supply OK is high, with a maximum source current of 2mA. When a fault occurs, Power Supply OK is low, with a maximum sink current of 1mA. The following faults set this signal low:

Over-voltage protection	Enable/Disable signal true
Over-current protection	Shut Off signal true
Over-temperature protection	Remote interface failure
AC line failure	Output turned off

Daisy-Chained Output Shut-down

It is possible to configure a multiple power supply system to shut down all the units when a fault condition occurs in one of the units. SW1 setup switch 5 must be in the Down position to enable the daisy-chain operation. Other switches are unaffected by this setting.

If a fault occurs in one unit, its Power Supply OK signal is set low and its display will indicate the fault. The other units shut off with their displays indicating SO. When the fault condition is cleared, all units will recover according to their Safe-Start or Auto-Restart settings.

The following figure shows three units daisy-chained - the same connection method can be used with additional units. The Shut Off and Power Supply OK signals are referenced to Chassis Common (J1 pins 2 and 3).

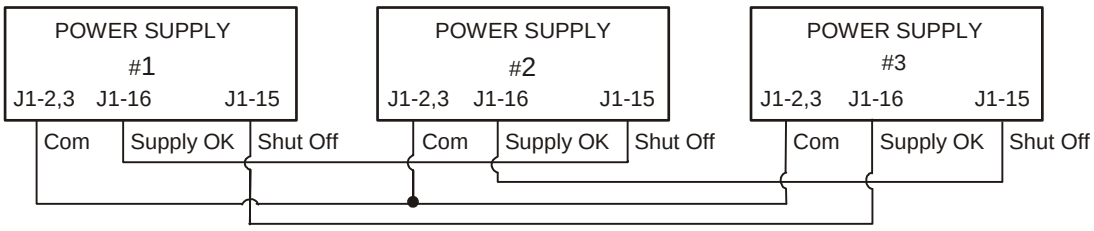

Analog Programming of Output Voltage and Current

CAUTION J1 pin 12, pin 22, and pin 23 are internally connected to the negative sense terminal. Do not reference these pins to any terminal other than the negative sense terminal, as it may damage the unit.

In Local mode, the output voltage and current is programmed with the front panel VOLTAGE and CURRENT knobs or over the remote interface. In Analog mode, the output voltage and current can be programmed either by an analog voltage or by resistors connected to the rear panel J1 connector.

The J1 connector also provides monitoring signals for the output voltage and output current. The programming range and monitoring signal range can be selected using the SW1 setup switch.

NOTE With analog programming enabled, you cannot program the output voltage or current using the front panel knobs or the remote interface. However, you can read back output voltage or current from the front panel or the remote interface.

Analog Programming Control Terminals

J1 connector pin 8 accepts a TTL signal or an open/short contact switch (referenced to pin 12) to select between Local or Analog programming of the output voltage and current. This function is enabled or disabled by SW1 setup switches 1 and 2.

J1 connector pin 21 is an open collector output that indicates if the power supply is in Local mode or in Analog mode. To use this output, connect a pull-up resistor to a voltage source of 30 VDC maximum. Choose the pull-up resistor so that the sink current will be less than 5mA when the output is in low state.

SW1 switch 1 and 2	J1 pin 8 function	J1 pin 21 signal	Output voltage/ current control
Both Down (default)	No effect	Open	Local
Either one, or both Up	0 or Short	0~0.6V	Analog
	1 or Open	Open	Local

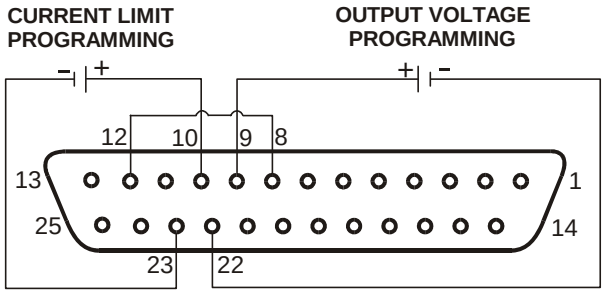

Voltage Programming of Output Voltage and Current

CAUTION To maintain the isolation of the power supply and prevent ground loops, use an isolated programming source when operating the unit using analog programming.

Voltage programming sources of 0 - 5V or 0 - 10V can be used to program the output voltage and current limit from zero to full scale.

Set the power supply to analog voltage programming as follows:

1. Make sure that the power supply is turned off.
2. Set SW1 setup switch 1 (for voltage) and 2 (for current) to the Up position.
3. Set SW1 setup switch 3 to select programming voltage range according to the table following these procedure steps.
4. Make sure that SW1 setup switches 7 and 8 are set Down.
5. Connect a short between J1 pin 8 and J1 pin 12 (see following figure).
6. Connect the programming source to the mating plug of J1 as shown in the following figure. Observe the correct polarity for the voltage source.
7. Set the programming sources to the desired levels and turn the power supply on. Adjust the programming sources to change the power supply output.

The analog control circuits let you set the output voltage and current limit up to 5% over the model-rated maximum value. The power supply will operate within the extended range, however it is not recommended to operate the power supply over its voltage and current rating, and performance in this region is not guaranteed.

SW1 switch 3	Voltage Programming (J1 pin 9)	Current Programming (J1 pin 10)
Down (default)	0 – 5V	0 – 5V
Up	0 – 10V	0 – 10V

Resistance Programming of Output Voltage and Current

Resistances of 0 - 5 kΩ or 0 - 10 kΩ can be selected to program the output voltage and current limit from zero to full scale. Internal current sources supply a 1 mA current through the external resistors. The voltage drop across the resistors is used as the programming voltage for the power supply. To maintain the temperature stability specification of the power supply, only use resistors that are stable and low noise, with a temperature coefficient less than 50 ppm.

Set the power supply to resistance programming as follows:

1. Make sure that the power supply is turned off.
2. Set SW1 setup switch 1 (for voltage) and 2 (for current) to the UP position.
3. Set SW1 setup switch 3 to select programming resistance range according to the table following these procedure steps.
4. Set SW1 setup switch 7 (for voltage) and 8 (for current) to the Up position to enable resistance programming.
5. Connect a short between J1 pin 8 and J1 pin 12 (see figure).
6. Connect the programming resistors to the mating plug of J1 as shown in the following figure. A variable resistor can control the output over its entire range, or a combination of variable resistor and series/parallel resistors can control the output over a restricted portion of its range.
7. Set the programming resistors to the desired resistance and turn the power supply on. Adjust the resistors to change the power supply output.

The analog control circuits let you set the output voltage and current limit up to 5% over the model-rated maximum value. The power supply will operate within the extended range, however it is not recommended to operate the power supply over its voltage and current rating, and performance in this region is not guaranteed.

SW1 switch 3	Voltage Programming (J1 pin 9)	Current programming (J1 pin 10)
Down (default)	0 – 5 kΩ	0 – 5 kΩ
Up	0 – 10 kΩ	0 – 10 kΩ

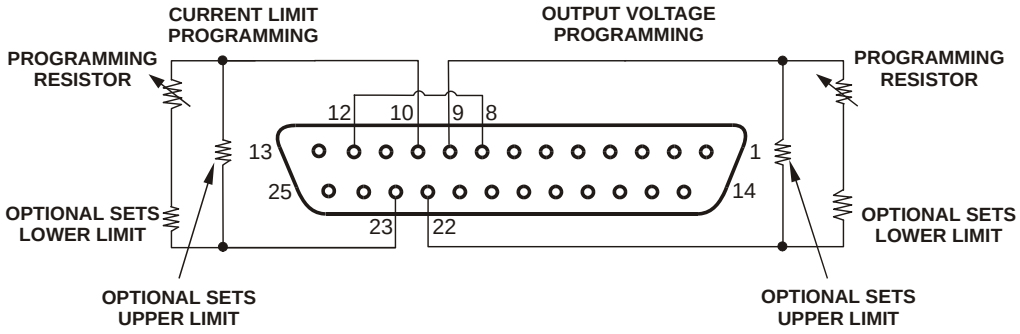

External Monitoring of Output Voltage and Current

The J1 connector also provides analog signals for monitoring the output voltage and current. Selection of the voltage range between 0 – 5V or 0 – 10V is made by SW1 setup switch 4. The monitoring signals represent 0 to 100% of the power supply output voltage and current rating. The monitor outputs have a 500Ω series output resistance. Make sure that the sensing circuit has an input resistance greater than 500 kΩ or the accuracy will be reduced.

SW1 switch 4	Voltage range	J1 signal connection	Signal function
Down (default)	0 – 5V	J1 pin 11	Voltage Monitor
		J1 pin 24	Current Monitor
Up	0 – 10V	J1 pin 11	Voltage Monitor
		J1 pin 24	Current Monitor

J1 pin 12 is the signal common for J1 pins 11 and 24.

4
Operating the Power Supply Remotely

Connecting to the Interfaces 50
SCPI Commands – an Introduction 60

This chapter contains information on how to configure the three remote interfaces that are provided on the back of the instrument. In most cases you can connect your power supply to any one of these interfaces and be up and running with a minimum amount of configuration.

NOTE Detailed information on configuring the remote interfaces is included in the *USB/LAN/GPIB Interfaces Connectivity Guide* document located on the Automation-Ready CD-ROM included with this product.

This chapter also contains a brief introduction to the SCPI Programming language. SCPI (Standard Commands for Programmable Instruments) is a programming language for controlling instrument functions over the GPIB. SCPI is layered on top of the hardware-portion of IEEE 488.2. The same SCPI commands and parameters control the same functions in different classes of instruments.

Connecting to the Interfaces

The Agilent N8700 power supplies support remote interface communication using a choice of three interfaces: GPIB, USB, and LAN. All three interfaces are live at power-on.

GPIB Interface

NOTE For detailed information about GPIB interface connections, refer to the Agilent Technologies *USB/LAN/GPIB Interfaces Connectivity Guide*, located on the Automation-Ready CD-ROM that is shipped with your product.

The following steps will help you quickly get started connecting your instrument to the General Purpose Interface Bus (GPIB). The following figure illustrates a typical GPIB interface system.

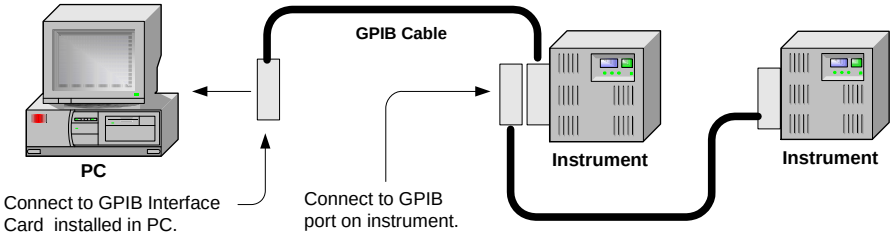

1. If you have not already done so, install the Agilent IO Libraries Suite from the Automation-Ready CD-ROM that is shipped with your product.
2. If you do not have a GPIB interface card installed on your computer, turn off your computer and install the GPIB card.
3. Connect your instrument to the GPIB interface card using a GPIB interface cable.
4. Use the Connection Expert utility of the Agilent IO Libraries Suite to configure the installed GPIB interface card's parameters.
5. The power supply is shipped with its GPIB address set to 5. Use the front panel menu if you need to change the GPIB address.
   a. Press and hold the OCP/488 button for about three seconds. The DC VOLTS display will show the present GPIB address.
   b. To change the GPIB address, turn the voltage knob until the desired GPIB address appears in the display. Valid GPIB addresses are in the range of 0 to 30.
6. You can now use Interactive IO within the Connection Expert to communicate with your instrument, or you can program your instrument using the various programming environments.

USB Interface

NOTE For detailed information about USB interface connections, refer to the Agilent Technologies *USB/LAN/GPIB Interfaces Connectivity Guide*, located on the Automation-Ready CD-ROM that is shipped with your product.

The following steps will help you quickly get started connecting your USB-enabled instrument to the Universal Serial Bus (USB). The following figure illustrates a typical USB interface system.

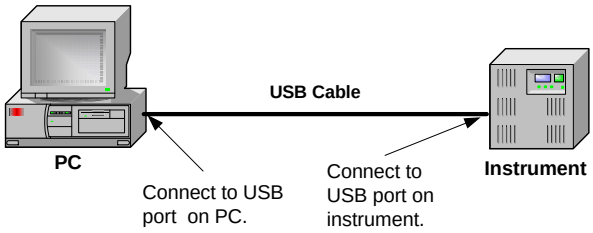

1. If you have not already done so, install the Agilent IO Libraries Suite from the Automation-Ready CD-ROM that is shipped with your product.
2. Connect your instrument to the USB port on your computer.
3. With the Connection Expert utility of the Agilent IO Libraries Suite running, the computer will automatically recognize the instrument. This may take several seconds. When the instrument is recognized, your computer will display the VISA alias, IDN string, and VISA address. This information is located in the USB folder.

NOTE The VISA address is: USB0::2391::2055::model-serialnumber::0:INSTR where 2391 is the Agilent code, 2055 is the N8700 code, model is the 6-character model number, and serialnumber is the 10-character serial number located on the label on the side of the unit.

4. You can now use Interactive IO within the Connection Expert to communicate with your instrument, or you can program your instrument using the various programming environments.

LAN Interface

NOTE For detailed information about LAN interface connections, refer to the Agilent Technologies *USB/LAN/GPIB Interfaces Connectivity Guide*, located on the Automation-Ready CD-ROM that is shipped with your product.

The following steps will help you quickly get started connecting and configuring your instrument on a local area network (LAN). The two types of local area networks connections that are discussed in this section are site networks and private networks.

Connecting to a Site LAN

A site LAN is a local area network in which LAN-enabled instruments and computers are connected to the network through routers, hubs, and/or switches. They are typically large, centrally-managed networks with services such as DHCP and DNS servers.

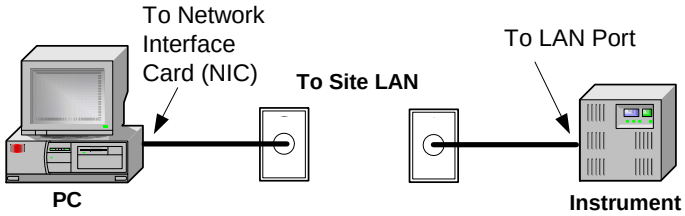

1 If you have not already done so, install the Agilent IO Libraries Suite from the Automation-Ready CD-ROM that is shipped with your product.

2 Connect the instrument to the site LAN. Provided that your network has a DHCP server and uses Dynamic DNS naming service, the instrument will automatically obtain an IP address from the network. This may take up to one minute. It will also register its hostname with the dynamic DNS server. The default hostname can then be used to communicate with the instrument.

   The front panel **LAN** indicator will come on when the LAN port has been configured. If you are unable to communicate with the instrument, check that a valid IP address has been assigned. Press the front panel LAN button to view the IP address.

NOTE Each Agilent N8700 power supply is shipped with a default hostname with the format: A-modelnumber-serialnumber where *modelnumber* is the instrument's 6-character model number (e.g. N8741A), and *serialnumber* is 5th through the 9th character of the 10-character serial number located on the label on the side of the unit (e.g. H1234 if the serial number is US24H12345). A-N8741A-H1234 is an example of a hostname.

3 Use the Connection Expert utility of the Agilent IO Libraries Suite to add the N8700 power supply and verify a connection. To add the instrument, you can request the Connection Expert to discover the instrument. If the instrument cannot be found, you can add the instrument using the instrument's hostname.

NOTE If this does not work, refer to the chapter on "Troubleshooting Guidelines" in the Agilent Technologies *USB/LAN/GPIB Interfaces Connectivity Guide*.

4 You can now use Interactive IO within the Connection Expert to communicate with your instrument, or you can program your instrument using the various programming environments. You can also use the Web browser on your computer to communicate with the instrument as described under "Using the Web Server" later in this chapter.

Connecting to a Private LAN:

A private LAN is a network in which LAN-enabled instruments and computers are directly connected, and not connected to a site LAN. They are typically small, with no centrally-managed resources.

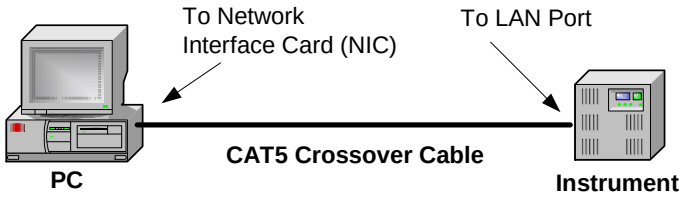

1 If you have not already done so, install the Agilent IO Libraries Suite from the Automation-Ready CD-ROM that is shipped with your product.

2 Connect the instrument to the computer using a LAN crossover cable. Alternatively, connect the computer and the instrument to a standalone hub or switch using regular LAN cables.

NOTE Make sure your computer is configured to obtain its address from DHCP and that NetBIOS over TCP/IP is enabled. If the computer had been connected to a site LAN, it may still retain previous network settings from the site LAN. Wait one minute after disconnecting it from the site LAN before connecting it to the private LAN. This allows Windows to sense that it is on a different network and restart the network configuration. If you are running Windows 98, you may need to manually release the previous settings.

3 The factory-shipped instrument LAN settings are configured to automatically obtain an IP address from the network using a DHCP server, or using AutoIP if a DHCP server is not present. You can leave these settings as they are. Most Agilent products and most computers will automatically choose an IP address using auto-IP if a DHCP server is not present. Each assigns itself an IP address from the block 169.254.nnn. Note that this may take up to one minute.

   The front panel **LAN** indicator will come on when the LAN port has been configured. If you are unable to communicate with the instrument, check that a valid IP address has been assigned. Press the front panel LAN button to view the IP address.

4 Use the Connection Expert utility of the Agilent IO Libraries Suite to add the N8700 power supply and verify a connection. To add the instrument, you can request the Connection Expert to discover the instrument. If the instrument cannot be found, you can add the instrument using the instrument's hostname. The default hostname is described under "Connecting to a Site LAN".

NOTE If this does not work, refer to the chapter on "Troubleshooting Guidelines" in the Agilent Technologies *USB/LAN/*GPIB *Interfaces Connectivity Guide*.

5 You can now use Interactive IO within the Connection Expert to communicate with your instrument, or you can program your instrument using the various programming environments. You can also use the Web browser on your computer to communicate with the instrument as described under “Using the Web Server”.

LAN Communication

The Agilent IO Libraries Suite along with instrument drivers for specific programming environments can be used to communicate with your power supply. Your can also communicate with your power supply using its built-in Web server, the Telnet utility, or sockets. These latter methods are a convenient way to communicate with the power supply without using I/O libraries or drivers.

Ethernet Connection Monitoring

Agilent N8700 power supplies that have the LXI label on the front panel provide Ethernet connection monitoring. With Ethernet connection monitoring, the instrument’s LAN port is continually monitored, and automatically reconfigured when the instrument is unplugged for a minimum of 20 seconds and then reconnected to a network. The front panel **LAN** indicator will come on when the LAN port is connected and configured.

Using the Web Server

Your power supply has a built-in Web server that lets you control it directly from an internet browser on your computer. With the Web server, you can control and configure all of the front panel functions as well as additional functions such as triggering and the LAN parameters, which are not available from the front panel.

NOTE The built-in Web server only operates over the LAN interface. It requires Internet Explorer 5+ or Netscape 6.2+. You also need the Java (Sun) plug-in. This is included in the Java Runtime Environment. Refer to Sun Microsystem’s website.

The Web server is enabled when shipped. To launch the Web server:

1 Open the internet browser on your computer.

2 Select Connections in the Tools menu, under Internet Options. Then select LAN Settings and make sure that the Bypass proxy server for local addresses box is checked.

3 Enter the instrument’s hostname into the browser’s Address field to launch the Web server. The following home page will appear.

4 Click on the Browser Web Control button in the navigation bar on the left to begin controlling your instrument.

5 For additional help about any of the pages, click on the Help with this Page button.

If desired, you can control access to the Web server using password protection. As shipped from the factory, no password is set. To set a password, refer to the section “Configuring the LAN Parameters”.

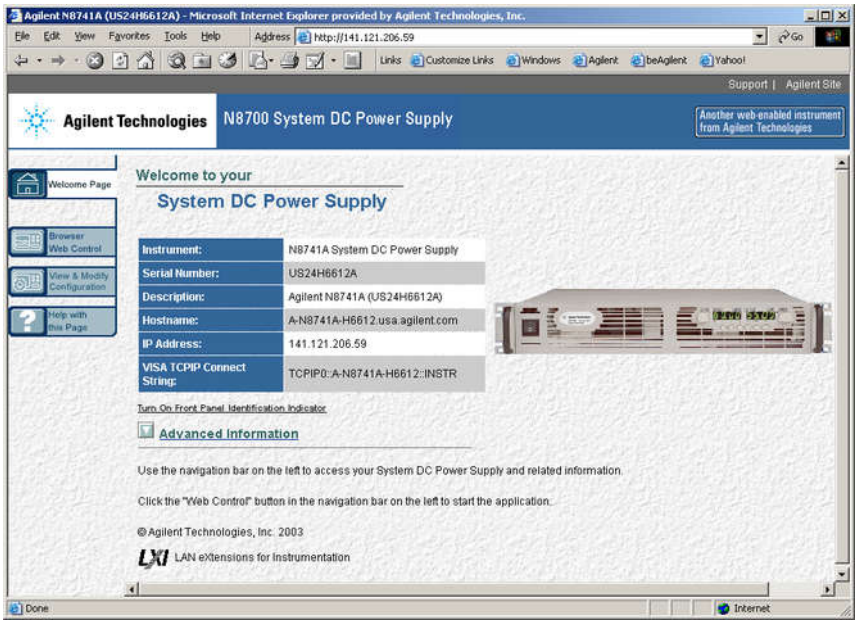

Using Telnet

In an MS-DOS Command Prompt box type: *telnet hostname 5024* where *hostname* is the N8700 hostname or IP address, and 5024 is the instrument's telnet port.

You should get a Telnet session box with a title indicating that you are connected to the power supply. Type the SCPI commands at the prompt.

Using Sockets

Agilent instruments have standardized on using port 5025 for SCPI socket services. A **data socket** on this port can be used to send and receive ASCII/SCPI commands, queries, and query responses. All commands must be terminated with a newline for the message to be parsed. All query responses will also be terminated with a newline. The power supply allows any combination of up to three simultaneous data socket and telnet connections to be made.

The socket programming interface also allows a **control socket** connection. The control socket can be used by a client to send device clear and to receive service requests. Unlike the data socket, which uses a fixed port number, the port number for a control socket varies and must be obtained by sending the following SCPI query to the data socket: SYSTem:COMMunicate:TCPip:CONTrol?

After the control port number is obtained, a control socket connection can be opened. As with the data socket, all commands to the control socket must be terminated with a newline. All query responses will also be terminated with a newline.

To send a device clear, send the string "DCL" to the control socket. When the power supply has finished performing the device clear it echoes the string "DCL" back to the control socket.

Service requests are enabled for control sockets using the Service Request Enable register. Once service requests have been enabled, the client program listens on the control connection. When SRQ goes true the instrument will send the string “SRQ +nn” to the client. The “nn” is the status byte value, which the client can use to determine the source of the service request.

Configuring the LAN Parameters

To configure the LAN parameters from the instrument’s Web server, launch the Web server as previously described, and click on the View & Modify Configuration tab on the left side of the page. Then click on the Modify Configuration button on the top of the page. The following screen lets you modify the LAN parameters:

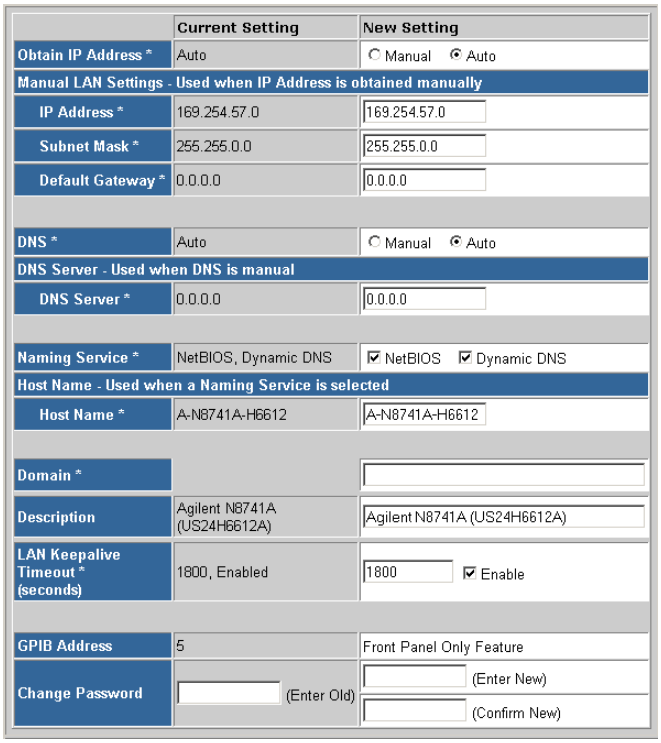

	Current Setting	New Setting
Obtain IP Address *	Auto	○ Manual ◉ Auto
Manual LAN Settings - Used when IP Address is obtained manually		
IP Address *	169.254.57.0	169.254.57.0
Subnet Mask *	255.255.0.0	255.255.0.0
Default Gateway *	0.0.0.0	0.0.0.0
DNS *	Auto	○ Manual ◉ Auto
DNS Server - Used when DNS is manual		
DNS Server *	0.0.0.0	0.0.0.0
Naming Service *	NetBIOS, Dynamic DNS	☑ NetBIOS ☑ Dynamic DNS
Host Name - Used when a Naming Service is selected		
Host Name *	A-N8741A-H6612	A-N8741A-H6612
Domain *		
Description	Agilent N8741A (US24H6612A)	Agilent N8741A (US24H6612A)
LAN Keepalive Timeout * (seconds)	1800, Enabled	1800 ☑ Enable
GPIB Address	5	Front Panel Only Feature
Change Password	(Enter Old)	(Enter New) / (Confirm New)

The configurable LAN parameters are described as follows:

Obtain IP Address This parameter configures the addressing of the instrument. **Auto** automatically configures the addressing. When selected, the instrument first tries to obtain an IP address from a DHCP server. If a DHCP server is found, the DHCP server assigns an IP address, Subnet Mask, and Default Gateway to the instrument. If a DHCP server is unavailable, the instrument tries to obtain an IP address using AutoIP. AutoIP automatically assigns an IP address, Subnet Mask, and Default Gateway addresses on networks that do not have a DHCP server. **Manual** allows you to manually configure the addressing of the instrument by entering values in the following three fields.

IP Address This value is the Internet Protocol (IP) address of the instrument. An IP address is required for all IP and TCP/IP communications with the instrument. An IP Address consists of 4 decimal numbers separated by periods. Each decimal number ranges from 0 through 255.

Subnet Mask This value is used to enable the instrument to determine if a client IP address is on the same local subnet. When a client IP address is on a different subnet, all packets must be sent to the Default Gateway.

Default Gateway This value is the IP Address of the default gateway that allows the instrument to communicate with systems that are not on the local subnet, as determined by the subnet mask setting.

DNS DNS is an internet service that translates domain names into IP addresses. This parameter indicates whether the IP address of the Domain Name System (DNS) server is obtained automatically or manually. **Auto** obtains the DNS server address from DHCP. **Manual** uses the DNS server in the following field.

DNS Server This value is the address of the Domain Name System (DNS) server. If DHCP is disabled, the DNS server parameter is needed for the instrument to be able to find and display its hostname.

Naming Service This parameter specifies the Naming service, if any, to be used to register the instrument. **NetBIOS** indicates the instrument will be registered using the RFC NetBIOS naming protocol. **Dynamic DNS** indicates the instrument will be registered using the Dynamic DNS naming system.

Host Name This field registers the supplied name with the selected naming service. If the field is blank, no name is registered. A hostname may contain upper and lower case letters, numbers and dashes(-). The maximum length is 15 characters. The format is A-modelnumber-serialnumber. Modelnumber is the instrument's 6-character model number, and serialnumber is 5th through the 9th character of the 10-character serial number located on the label on the side of the unit.

Domain This field registers the Internet domain for the instrument. The Domain must start with a letter and may contain upper and lower case letters, numbers, dashes(-) and dots(.).

Description This field lets you assign a user-friendly name to the instrument. This name is used as the title of the instrument's Web home page.

LAN Keepalive Timeout This value sets the LAN keepalive in seconds. The instrument uses the LAN keepalive timer to determine if a client is still reachable. If there has been no activity on the connection after the specified time, the instrument will send keepalive probes to the client to determine if it is still alive. If not, the connection will be marked as down or "dropped." The instrument will release any resources that were allocated to that client. When setting this parameter, it is recommended that the largest value be used that still meets the application's need for unreachable client detection. Smaller keepalive timeout values will generate more keepalive probes (network traffic), using more of the available network bandwidth. Check the Enable box to enable the LAN Keepalive function. Allowed values: 720-99999 seconds.

GPIB Address This field shows the instrument's GPIB bus address. The GPIB address can be configured using the instrument's front panel.

Change Password This field lets you change the Web password. Enter the old password to confirm access. Enter the new password in the Enter New field and in the Confirm New field. The password can be up to 12 alpha-numeric characters (letters, numbers, underscore); case insensitive. The first character must be a letter. If the fields are blank, password checking is disabled.

Factory-shipped LAN Settings

The factory-shipped LAN settings documented in the following table are optimized for connecting your power supply to a site network. They should also work well for other network configurations.

The factory-shipped settings can be restored by pressing and holding the front panel LAN button for three seconds. Pressing the LAN button again while the message “LAn rES” is displayed resets the LAN settings.

Factory-shipped non-volatile LAN settings			
Get IP Address	Automatic	Dynamic DNS naming service	Enabled
IP Address	169.254.57.0	NetBIOS naming service	Enabled
Subnet Mask	255.255.0.0	Domain name	Blank
Default Gateway	0.0.0.0	TCP keepalive	Enabled
Obtain DNS server from DHCP	Enabled	TCP keepalive seconds	1800
DNS server	Blank	Ethernet Auto-negotiation	Enabled
Host name	A-N87xxA-xxxxx	Ping server	Enabled
		Web password	Blank

Using the Setup Utility

A Setup utility that lets you configure the LAN settings of your instrument is provided on the Product Reference CD-ROM included with this manual. Install and run this Setup utility if you cannot configure the LAN interface as previously described in this section.

1. Connect your power supply to your computer using either the USB interface or the GPIB interface as previously described.
2. Install the Setup utility on your computer. Run the Setup utility by clicking **Start|Programs|Agilent|N8700 Setup Utility**.
3. Configure the following LAN address parameters. These are located under the Settings tab. For a description of these parameters, refer to the previous section.

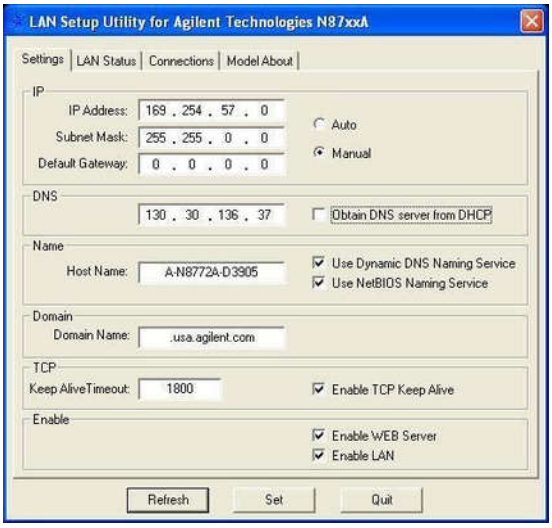

4 Enable the LAN and, optionally, the built-in Web server using the applicable check boxes.

5 Click the Set button to save all the settings information.

6 Connect the LAN cable to your instrument and computer. Reboot the instrument. Wait for the instrument to configure the new LAN settings.

7 View the LAN settings by clicking the LAN Status tab. Click the Refresh button to update the display with the assigned IP Address and Subnet Mask.

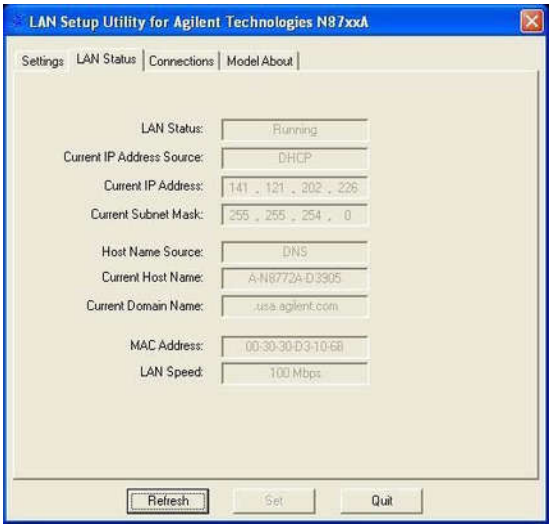

8 You can view information about the GPIB or USB interface by clicking the Connections tab.

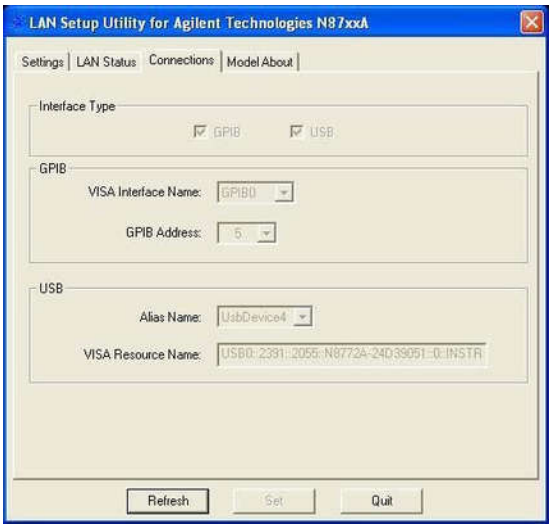

You can also use the Setup utility to view model-specific information about your power supply. Click the Model About tab to view the model number, serial number, active firmware version, backup firmware version, and output ratings.

SCPI Commands – an Introduction

SCPI (Standard Commands for Programmable Instruments) is an ASCII-based instrument command language designed for test and measurement instruments. SCPI commands are based on a hierarchical structure, also known as a tree system. In this system, associated commands are grouped together under a common node or root, thus forming subsystems. Subsystem commands perform specific power supply functions. A portion of the SOURce subsystem is shown below to illustrate the tree system.

```
[SOURce:]
        CURRent
                [:LEVel]
                        [:IMMediate] <NRf+>
                         :TRIGgered <NRf+>
                 :PROTection
                        :STATe <Bool>
```

SOURce is the root keyword of the command, CURRent is a second-level keyword, LEVel and PROTection are third-level keywords, and IMMediate, TRIGgered and STATe are fourth-level keywords. Colons (:) separate higher-level from lower-level keywords.

Syntax

The following command syntax is used in this manual:

Square Brackets [ ] Items within square brackets are optional. The representation [SOURce:]VOLTage means that SOURce: may be omitted.

Angle brackets < > Items within angle brackets are parameter descriptions. For example, <NR1> indicates a specific form of numerical data.

Vertical bar | Vertical bars separate alternative parameters. For example, VOLT | CURR indicates that either "VOLT" or "CURR" can be used as a parameter.

The syntax characters cannot be included in the command string.

Multiple Commands in a Message

Multiple SCPI commands can be combined and sent as a single message with one message terminator. There are two important considerations when sending several commands within a single message:

- Use a semicolon (;) to separate commands within a message.
- There is an implied path that affects how commands are interpreted by the power supply.

The command path can be thought of as a string that gets inserted **before** each keyword within a message. For the first command in a message, the path is a null string. For each subsequent command the path is defined as the characters that make up the keywords of the

previous command in the message up to and including the last colon separator. An example of a message with two commands is:

```
OUTPut:STATe ON;PROTection:CLEar
```

which shows the use of the semicolon separating the two commands, and also illustrates the command path concept. Note that with the second command, the leading keyword OUTPut was omitted because after the OUTPut:STATe ON command, the path became defined as OUTPut, and thus the second command was interpreted as:

```
OUTPut:PROTection:CLEar
```

In fact, it would have been incorrect to include the OUTPut keyword in the second command, because the result after combining it with the command path would be:

```
OUTPut:OUTPut:PROTection:CLEar
```

which would result in a syntax error.

Commands from Different Subsystems

In order to combine commands from different subsystems, you need to be able to reset the command path to a null string within a message. Beginning the command with a colon (:), discards the previous path. For example, you could clear the output protection and check the status of the Operation Condition register in one message by using a root specifier as follows:

```
OUTPut:PROTection:CLEar;:STATus:OPERation:CONDition?
```

The following message shows how to combine commands from different subsystems as well as within the same subsystem.

```
VOLTage:LEVel 7.5;PROTection 10;:CURRent:LEVel 0.25
```

Note the use of the optional keyword LEVel to maintain the correct path within the subsystems, and the use of the root specifier (:) to move between subsystems.

Message Unit

The simplest SCPI command is a single message unit consisting of a keyword followed by a message terminator such as newline. The message unit may include a parameter after the keyword. The parameter can be numeric or a string.

```
ABORt<NL>
```

```
VOLTage 20<NL>
```

```
VOLTage:TRIGgered MINimum<NL>
```

Colons (**:**) separate higher-level keywords from lower-level keywords. Use a blank space to separate parameters from keywords. If a command requires more than one parameter, use commas to separate adjacent parameters.

In the previous examples, the upper-case letters indicate the abbreviated spelling for the keyword. For shorter program lines, you can send the abbreviated form. For better program readability, you can send the long form. For example, VOLT and VOLTage are both acceptable forms. You can use upper- or lower-case letters. Therefore, VOLTAGE, Volt, and volt are all acceptable. Other forms, such as VOL and VOLTAG, generate an error.

Queries

You can query the current value of most commands by adding a question mark to the command (VOLTage?, VOLTage:TRIGgered?). If a query contains a parameter, place the query indicator at the end of the last keyword. Observe the following precautions with queries:

- Add a blank space between the query indicator (?) and any subsequent parameter. (VOLTage:TRIGgered? MAX)
- Set up the proper number of variables for the returned data.
- Read back all the results of a query before sending another command to the power supply. Otherwise a *Query Interrupted* error will occur and the unreturned data will be lost.

Common Commands

Common commands generally control overall power supply functions, such as reset, status, and synchronization. All common commands consist of a three-letter mnemonic preceded by an asterisk: *RST *IDN? *SRE 8

You can combine common commands with subsystem commands in the same message. Use semicolons to separate the common command from the subsystem commands. Common commands *do not affect the command path*; you may insert them anywhere in the message.

```
VOLTage:TRIGgered 10;:INITiate;*TRG
```

```
OUTPut OFF;*RCL 2;OUTPut ON
```

Command Terminators

A terminator informs SCPI that it has reached the end of a command. Three permitted command terminators are:

- newline (<NL>), which is ASCII decimal 10 or hex 0A.
- end or identify (<END>)
- both of the above (<NL><END>).

In the examples of this guide, the message terminator is assumed.

Parameter Types

Data programmed or queried from the power supply is ASCII. The data may be numerical or character string.

Numeric Parameters

Symbol	Response Formats
<NR1>	Digits with an implied decimal point assumed at the right of the least-significant digit. Examples: 273
<NR2>	Digits with an explicit decimal point. Example: 27.3
<NR3>	Digits with an explicit decimal point and an exponent. Example: 2.73E+02
	Parameter Formats
<NRf>	Extended format that includes <NR1>, <NR2> and <NR3>. Examples: 273 27.3 2.73E+02
<NRf+>	Expanded decimal format that includes <NRf> and MIN, MAX. Examples: 273 27.3 2.73E+02 MAX. MIN and MAX are the minimum and maximum limit values that are implicit in the range specification for the parameter.
<Bool>	Boolean Data. Can be numeric (0, 1), or named (OFF, ON).
<SPD>	String program data. String parameters enclosed in single or double quotes.

Suffixes and Multipliers

Class	Suffix	Unit	Unit with Multiplier
Current	A	ampere	MA (milliampere)
Amplitude	V	volt	MV (millivolt)
Time	S	second	MS (millisecond)
Common Multipliers			
1E3	K	kilo	
1E-3	M	milli	
1E-6	U	micro	

Response Data Types

Symbol	Response Formats
<CRD>	Character Response Data. Returns discrete parameters. Only the short form of the parameter is returned.
<AARD>	Arbitrary ASCII Response Data. Permits the return of undelimited 7-bit ASCII. This data type has an implied message terminator.
<SRD>	String Response Data. Returns string parameters enclosed in double quotes.

SCPI Command Completion

SCPI commands sent to the power supply are processed either sequentially or in parallel. Sequential commands finish execution before a subsequent command begins. Parallel commands allow other commands to begin executing while the parallel command is still executing.

The following is a list of parallel commands. You should use some form of command synchronization as discussed in this section before assuming that these commands have completed.

```
OUTPut:STATe                    INITiate
VOLTage                         OUTPut:PROTection:CLEar
CURRent
```

The *WAI, *OPC, and *OPC? common commands provide different ways of indicating when all transmitted commands, including any parallel ones, have completed their operations. Some practical considerations for using these commands are as follows:

***WAI** This command prevents the power supply from processing subsequent commands until all pending operations are completed. For example, the *WAI command can be used to make a voltage measurement after an output on command has completed:

```
OUTPut ON;*WAI;:MEASure:VOLTage?
```

***OPC?** This command places a 1 in the Output Queue when all pending operations have completed. Because it requires your program to read the returned value before executing the next program statement, *OPC? can be used to cause the controller to wait for commands to complete before proceeding with its program.

***OPC** This command sets the OPC status bit when all pending operations have completed. Since your program can read this status bit on an interrupt basis, *OPC allows subsequent commands to be executed.

NOTE The trigger subsystem must be in the Idle state for the status OPC bit to be true. As far as triggers are concerned, OPC is false whenever the trigger subsystem is in the Initiated state.

Device Clear

You can send a Device Clear at any time to abort a SCPI command that may be hanging up the GPIB interface. Device Clear clears the input and output buffers of the power supply. The status registers, error queue, and all configuration states are left unchanged by Device Clear. Device Clear also prepares the power supply to accept a new command string. The following statement shows how to send a device clear over the GPIB interface using *Agilent BASIC:*

```
CLEAR 705       IEEE-488 Device Clear
```



5
Language Reference

SCPI Command Summary 66
Calibration Commands 68
Measure Commands 69
Output Commands 70
Source Commands 71
Status Commands 73
System Commands 79
Trigger Commands 81

This section gives the syntax and parameters for all the IEEE 488.2 SCPI Subsystem commands and Common commands used by the power supply. It is assumed that you are familiar with the material in chapter 4, which explains the terms, symbols, and syntactical structures used here and gives an introduction to programming. You should also be familiar with chapter 3, in order to understand how the power supply functions.

Subsystem commands are specific to functions. They can be a single command or a group of commands. The groups are comprised of commands that extend one or more levels below the root. The subsystem commands are arranged alphabetically according to the function they perform.

Common commands begin with an * and consist of three letters (command) or three letters and a ? (query). They are defined by the IEEE 488.2 standard to perform common interface functions. Common commands are grouped along with the subsystem commands according to the function they perform.

SCPI Command Summary

NOTE Some [optional] commands have been included for clarity. All settings commands have a corresponding query.

Subsystem Commands

SCPI Command	Description
ABORt	Aborts the triggered action
CALibrate	
:CURRent[:LEVel]	Calibrates the output current programming
:DATA <NRf>	Enters the calibration value
:DATE <"SPD">	Sets the calibration date
:LEVel P1 | P2	Advances to the next calibration step
:PASSword <NRf>	Sets the numeric calibration password
:STATE <Bool> [,<NRf>]	Enables/disables calibration mode
:VOLTage[:LEVel]	Calibrates the output voltage programming
INITiate	
[:IMMediate][:TRANsient]	Initiates the trigger system
:CONTinuous[:TRANsient]	Enables/disables continuous triggers
MEASure	
[:SCALar]	
:CURRent[:DC]?	Returns the measured output current
:VOLTage[:DC]?	Returns the measured output voltage
OUTPut	
[:STATe] <Bool>	Enables/disables the specified output
:PON	
:STATe RST | AUTO	Programs the Power-On State
:PROTection	
:CLEar	Resets latched protection
[SOURce:]	
CURRent	
[:LEVel]	
[:IMMediate][:AMPLitude] <NRf+>	Sets the output current
:TRIGgered[:AMPLitude] <NRf+>	Sets the triggered output current
:PROTection	
:STATe <Bool>	Enables/disables over-current protection
VOLTage	
[:LEVel]	
[:IMMediate][:AMPLitude] <NRf+>	Sets the output voltage
:TRIGgered[:AMPLitude] <NRf+>	Sets the triggered output voltage
:LIMit	
:LOW <NRf+>	Sets the low-voltage limit
:PROTection	
[:LEVel] <NRf+>	Sets the over-voltage protection level

SCPI Command	Description
STATus	
:OPERation	
[:EVENt]?	Returns the value of the operation event register
:CONDition?	Returns the value of the operation condition register
:ENABle <NRf>	Enables specific bits in the Event register
:NTRansition<NRf>	Sets the Negative transition filter
:PTRansition<NRf>	Sets the Positive transition filter
:PRESet	Presets all enable and transition registers to power-on
:QUEStionable	
[:EVENt]?	Returns the value of the questionable event register
:CONDition?	Returns the value of the questionable condition register
:ENABle <NRf>	Enables specific bits in the Event register
:NTRansition<NRf>	Sets the Negative transition filter
:PTRansition<NRf>	Sets the Positive transition filter
SYSTem	
:COMMunicate	
:RLSTate LOCal | REMote | RWLock	Specifies the Remote/Local state of the instrument
:ERRor?	Returns the error number and error string
:VERSion?	Returns the SCPI version number
TRIGger	
:SOURce BUS	Sets the measurement trigger source
[:TRANsient][:IMMediate]	Generates a transient trigger

Common Commands

Command	Description
*CLS	Clear status
*ESE <NRf>	Standard event status enable
*ESE?	Return standard event status enable
*ESR?	Return event status register
*IDN?	Return instrument identification
*OPC	Enable "operation complete" bit in ESR
*OPC?	Return a "1" when operation complete
*OPT?	Return option number
*RCL <NRf>	Recalls a saved instrument state
*RST	Reset
*SAV <NRf>	Saves an instrument state
*SRE <NRf>	Set service request enable register
*SRE?	Return service request enable register
*STB?	Return status byte
*TRG	Trigger
*TST	Performs self-test, then returns result
*WAI	Holds off bus until all device commands done

Calibration Commands

Calibration commands let you enable and disable the calibration mode, change the calibration password, calibrate current and voltage programming, and store new calibration constants in nonvolatile memory.

NOTE If calibration mode has not been enabled with CALibrate:STATe, the calibration commands will generate an error.

CALibrate:CURRent[:LEVel]

This command initiates the calibration of the output current.

CALibrate:DATA <value>

This command enters a calibration value that you obtain by reading an external meter. You must first select a calibration level (with CALibrate:LEVel) for the value being entered. Data values are entered in either volts or amperes, depending on which function is being calibrated.

CALibrate:DATE <"date">
CALibrate:DATE?

This command stores the date the unit was last calibrated. The data must be of the numeric format "yyyy/mm/dd" where yyyy indicates the year, mm indicates the month, and dd indicates the day. The query returns the date.

CALibrate:LEVel P1|P2

This command selects the next point in the calibration sequence.
P1 is the first calibration point,
P2 is the second calibration point.

CALibrate:PASSword <password>

This command lets you change the calibration password. A new password is automatically stored in nonvolatile memory. If the password is set to 0, password protection is removed and the ability to enter calibration mode is unrestricted. The default password is 0 (zero).

CALibrate:STATe ON|OFF [,<password>]
CALibrate:STATe?

This command enables/disables calibration mode. Calibration mode must be enabled for the power supply to accept any other calibration commands. The first parameter specifies the enabled or disabled state On (1) or Off (0). The second parameter is the password.

A password is required if calibration mode is being enabled and the existing password is not 0. If the password is not entered or is incorrect, an error is generated and the calibration mode remains disabled. The query returns only the state, not the password.

The *RST value = Off.

CALibrate:VOLTage[:LEVel]

This command initiates the calibration of the output voltage.

Measure Commands

Measure commands measure the output voltage or current. MEASure commands acquire new data before returning the reading. Measurement overflows return a reading of 9.91E+37.

MEASure[:SCALar]:CURRent[:DC]?
MEASure[:SCALar]:VOLTage[:DC]?

These queries perform a measurement and return the DC output current in amperes or DC output voltage in volts.

Output Commands

Output commands enable the output, power-on, and protection functions.

OUTPut[:STATe] ON|OFF
OUTPut[:STATe]?

This command enables or disables the specified output(s). The enabled state is On (1); the disabled state is Off (0). The state of a disabled output is a condition of zero output voltage and a zero source current (see *RST). The query returns 0 if the output is off, and 1 if the output is on. The *RST value = Off.

OUTPut:PON:STATe RST|AUTO
OUTPut:PON:STATe?

This command determines if the power-on state will be determined by the reset state, or the settings the unit had when it was turned off. RST programs the unit to the reset state; AUTO programs the unit to the settings it had when it was turned off. The power-on state information is saved on non-volatile memory.

Refer to *RST and *RCL under System Commands for details.

OUTPut:PROTection:CLEar

This command clears the latched signals that have disabled the output. The over-voltage and over-current conditions are always latching. The over-temperature condition, AC-fail condition, Enable pins, and SO pins are latching if OUTPut:PON:STATe is RST, and non-latching if OUTPut:PON:STATe is AUTO.

All conditions that generate the fault must be removed before the latch can be cleared. The output is then restored to the state it was in before the fault condition occurred.

Source Commands

Source commands program the voltage, current, triggered, and protection functions.

[SOURce:]CURRent[:LEVel][:IMMediate][:AMPLitude] <value>|MIN|MAX
[SOURce:]CURRent[:LEVel][:IMMediate][:AMPLitude]? [MIN|MAX]
[SOURce:]CURRent[:LEVel]:TRIGgered[:AMPLitude] <value>|MIN|MAX
[SOURce:]CURRent[:LEVel]:TRIGgered[:AMPLitude]? [MIN|MAX]

These commands set the immediate and the triggered output current. Values are programmed in amperes. The immediate level is the output current setting. The triggered level is a stored value that transfers to the output when a trigger occurs. The *RST values = Min.

Model (I rating)	400A	330A	220A	165A	110A	85A	55A	42A	33A	22A	11A	5.5A
Minimum current	0	0	0	0	0	0	0	0	0	0	0	0
Maximum current	420	346.5	231	173.25	115.5	89.25	57.75	44.1	34.65	23.1	11.55	5.775
Model (I rating)				**250A**	**170A**	**125A**	**85A**	**65A**	**50A**	**34A**	**17A**	**8.5A**
Minimum current				0	0	0	0	0	0	0	0	0
Maximum current				262.5	178.5	131.25	89.25	68.25	52.5	35.7	17.85	8.925

[SOURce:]CURRent:PROTection:STATe ON|OFF
[SOURce:]CURRent:PROTection:STATe?

This command enables or disables the over-current protection (OCP) function. The enabled state is On (1); the disabled state is Off (0). If the over-current protection function is enabled and the output goes into constant current operation, the output is disabled and OC is set in the Questionable Condition status register. The *RST value = Off.

An over-current condition can be cleared with the Output Protection Clear command after the cause of the condition is removed.

[SOURce:]VOLTage[:LEVel][:IMMediate][:AMPLitude] <value>|MIN|MAX
[SOURce:]VOLTage[:LEVel][:IMMediate][:AMPLitude]? [MIN|MAX]
[SOURce:]VOLTage[:LEVel]:TRIGgered[:AMPLitude] <value>|MIN|MAX
[SOURce:]VOLTage[:LEVel]:TRIGgered[:AMPLitude]? [MIN|MAX]

These commands set the immediate and the triggered output voltage. Values are programmed in volts. The immediate level is the output voltage setting. The triggered level is a stored value that transfers to the output when a trigger occurs. The *RST values = Min.

The range of values that can be programmed for these commands is coupled with the voltage protection and the voltage limit low settings. The maximum value for the immediate and triggered voltage level is either the value in the following table, or the voltage protection setting divided by 1.05; whichever is lower. The minimum value is either the value in the table, or the low voltage setting divided by 0.95; whichever is higher.

Note that triggered values can be programmed outside these limits, but an error will be generated when the trigger occurs.

Model (V rating)	8V	10V	15V	20V	30V	40V	60V	80V	100V	150V	300V	600V
Minimum voltage	0	0	0	0	0	0	0	0	0	0	0	0
Maximum voltage	8.4	10.5	15.75	21	31.5	42	63	84	105	157.5	315	630

[SOURce:]VOLTage:LIMit:LOW <value>|MIN|MAX
[SOURce:]VOLTage:LIMit:LOW? [MIN|MAX]

This command sets the low voltage limit of the output. When a low voltage limit has been set, the instrument will ignore any programming commands that attempt to set the output voltage below the low voltage limit. The*RST value = Min.

The range of values that can be programmed for this command is coupled with the immediate voltage level setting. The maximum value for the low voltage limit is either the value in the following table, or the immediate voltage setting multiplied by 0.95; whichever is lower. The minimum setting is the value in the table.

Model (V rating)	8V	10V	15V	20V	30V	40V	60V	80V	100V	150V	300V	600V
Minimum low limit	0	0	0	0	0	0	0	0	0	0	0	0
Maximum low limit	7.6	9.5	14.25	19	28.5	38	57	76	95	142	285	570

[SOURce:]VOLTage:PROTection:LEVel <value>|MIN|MAX
[SOURce:]VOLTage:PROTection:LEVel? [MIN|MAX]

This command sets the over-voltage protection (OVP) level of the output. The values are programmed in volts. If the output voltage exceeds the OVP level, the output is disabled and OV is set in the Questionable Condition status register. The*RST value = Max.

The range of values that can be programmed for this command is coupled with the immediate voltage level setting. The minimum value for the voltage protection level is either the value in the following table, or the immediate voltage setting multiplied by 1.05; whichever is higher. The maximum setting is the value in the table.

An over-voltage condition can be cleared with the Output Protection Clear command after the condition that caused the OVP trip is removed.

Model (V rating)	8V	10V	15V	20V	30V	40V	60V	80V	100V	150V	300V	600V
Min. protection limit	0.5	0.5	1.0	1.0	2.0	2.0	5.0	5.0	5.0	5.0	5.0	5.0
Max. protection limit	10	12	18	24	36	44	66	88	110	165	330	660

Status Commands

Status commands program the power supply's status registers. As shown in the following figure, the power supply has three groups of status registers; Operation, Questionable, and Standard Event. The Operation and Questionable status groups each consist of the Condition, Enable, and Event registers and NTR and PTR filters.

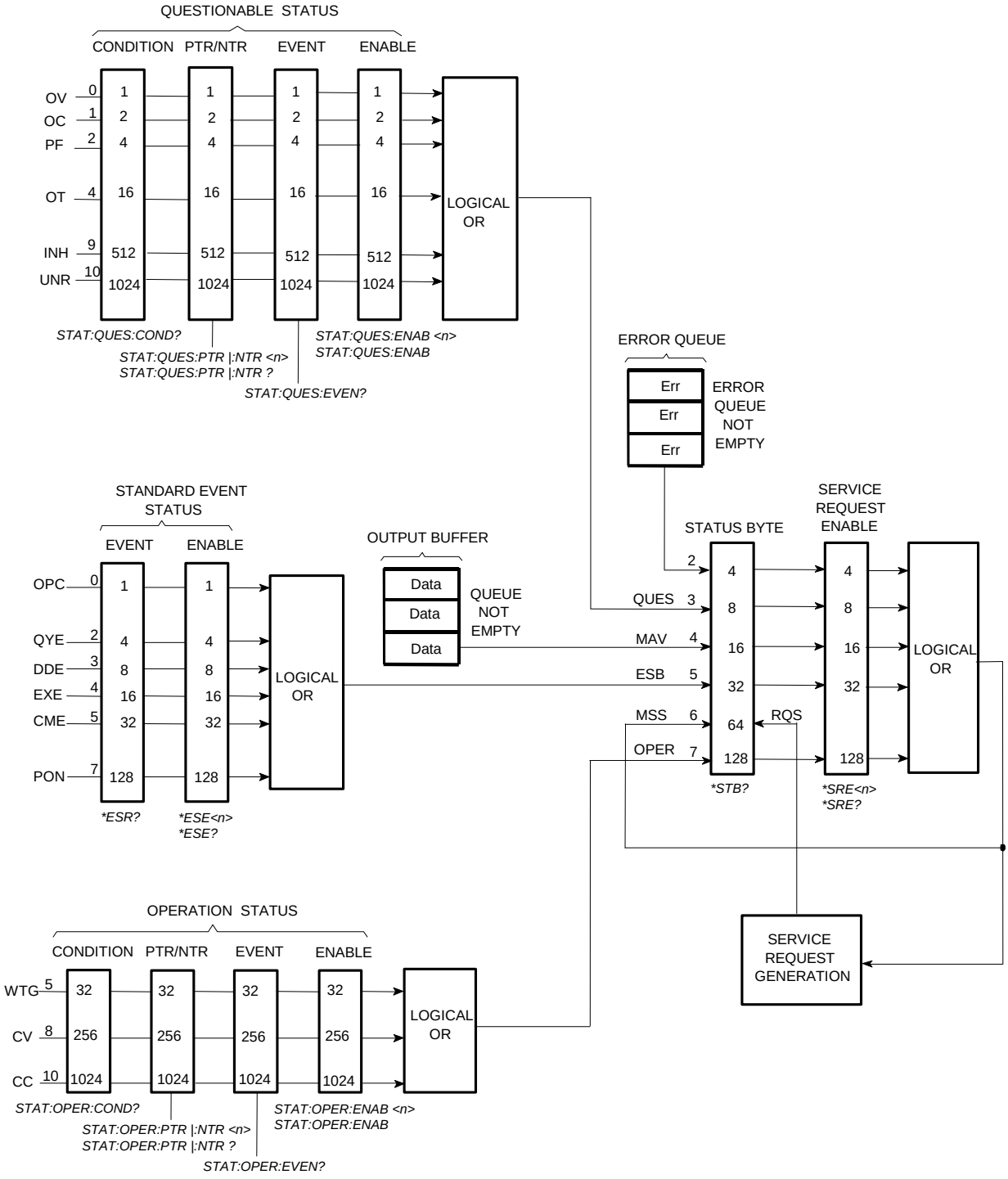

The Standard Event group is programmed with Common commands as described later in this section. Common commands also control additional status functions such as the Service Request Enable and the Status Byte registers.

STATus:PRESet

This command sets all defined bits in the Operation and Questionable PTR registers. The command clears all defined bits in the Operation and Questionable NTR and Enable registers.

STATus:OPERation[:EVENt]?

This query returns the value of the Operation Event register. The Event register is a read-only register, which stores (latches) all events that are passed by the Operation NTR and/or PTR filter. Reading the Operation Event register clears it. The bit configuration of the Operation status registers is as follows:

Bit Position	15-11	10	9	8	7-6	5	4-0
Bit Value	–	1024	–	256	–	32	–
Bit Name	–	CC	–	CV	–	WTG	–

CC = The output is in constant current
CV = The output is in constant voltage
WTG = The unit is waiting for a transient trigger

STATus:OPERation:CONDition?

This query returns the value of the Operation Condition register. That is a read-only register, which holds the live (unlatched) operational status of the power supply.

STATus:OPERation:ENABle <value>
STATus:OPERation:ENABle?

This command and its query set and read the value of the Operational Enable register. This register is a mask for enabling specific bits from the Operation Event register to set the operation summary bit (OPER) of the Status Byte register. This bit (bit 7) is the logical OR of all the Operational Event register bits that are enabled by the Status Operation Enable register. The Preset value = 0.

STATus:OPERation:NTR <value>
STATus:OPERation:PTR <value>
STATus:OPERation:NTR?
STATus:OPERation:PTR?

These commands set or read the value of the Operation NTR (Negative-Transition) and PTR (Positive-Transition) registers. These registers serve as polarity filters between the Operation Condition and Operation Event registers to cause the following actions:

- When a bit in the Operation NTR register is set to 1, then a 1-to-0 transition of the corresponding bit in the Operation Condition register causes that bit in the Operation Event register to be set.
- When a bit of the Operation PTR register is set to 1, then a 0-to-1 transition of the corresponding bit in the Operation Condition register causes that bit in the Operation Event register to be set.
- If the same bits in both NTR and PTR registers are set to 1, then any transition of that bit at the Operation Condition register sets the corresponding bit in the Operation Event register.
- If the same bits in both NTR and PTR registers are set to 0, then no transition of that bit at the Operation Condition register can set the corresponding bit in the Operation Event register.

The Preset value are: NTR = 0; PTR = 32767

STATus:QUEStionable[:EVENt]?

This query returns the value of the Questionable Event register. The Event register is a read-only register, which stores (latches) all events that are passed by the Questionable NTR and/or PTR filter. Reading the Questionable Event register clears it. The bit configuration of the Questionable status registers is as follows:

Bit Position	15-11	10	9	8-5	4	3	2	1	0
Bit Value	–	1024	512	–	16	–	4	2	1
Bit Name	–	UNR	INH	–	OT	–	PF	OC	OV

UNR = The output is unregulated
INH = The output is turned off by one of the external J1 inhibit signals
OT = The output is disabled by the over-temperature protection
PF = The output is disabled because AC power has failed
OC = The output is disabled by the over-current protection
OV = The output is disabled by the over-voltage protection

STATus:QUEStionable:CONDition?

This query returns the value of the Questionable Condition register. That is a read-only register, which holds the real-time (unlatched) questionable status of the power supply.

STATus:QUEStionable:ENABle <value>
STATus:QUEStionable:ENABle?

This command and its query set and read the value of the Questionable Enable register. This register is a mask for enabling specific bits from the Questionable Event register to set the questionable summary bit (QUES) of the Status Byte register. This bit (bit 3) is the logical OR of all the Questionable Event register bits that are enabled by the Questionable Status Enable register. The Preset value = 0.

STATus:QUEStionable:NTR <value>
STATus:QUEStionable:PTR <value>
STATus:QUEStionable:NTR?
STATus:QUEStionable:PTR?

These commands set or read the value of the Questionable NTR (Negative-Transition) and PTR (Positive-Transition) registers. These registers serve as polarity filters between the Questionable Condition and Questionable Event registers to cause the following actions:

- When a bit of the Questionable NTR register is set to 1, then a 1-to-0 transition of the corresponding bit of the Questionable Condition register causes that bit in the Questionable Event register to be set.
- When a bit of the Questionable PTR register is set to 1, then a 0-to-1 transition of the corresponding bit in the Questionable Condition register causes that bit in the Questionable Event register to be set.
- If the same bits in both NTR and PTR registers are set to 1, then any transition of that bit at the Questionable Condition register sets the corresponding bit in the Questionable Event register.
- If the same bits in both NTR and PTR registers are set to 0, then no transition of that bit at the Questionable Condition register can set the corresponding bit in the Questionable Event register.

The Preset values are: NTR = 0; PTR = 32767

*CLS

This command causes the following actions on the status system:

- Clears the Standard Event Status, Operation Status Event, and Questionable Status Event registers
- Clears the Status Byte and the Error Queue
- If *CLS immediately follows a program message terminator (<NL>), then the output queue and the MAV bit are also cleared.

*ESE
*ESE?

This command programs the Standard Event Status Enable register bits. The programming determines which events of the Standard Event Status Event register (see *ESR?) are allowed to set the ESB (Event Summary Bit) of the Status Byte register. A "1" in the bit position enables the corresponding event.

All of the enabled events of the Standard Event Status Event Register are logically OR-ed to cause the Event Summary Bit (ESB) of the Status Byte Register to be set. The query reads the Standard Event The query reads the Standard Event Status Enable register. The bit configuration of the Standard Event register is as follows:

Bit Position	7	6	5	4	3	2	1	0
Bit Value	128	–	32	16	8	4	–	1
Bit Name	PON	–	CME	EXE	DDE	QUE	–	OPC

PON = Power-on has occurred
CME = Command error
EXE = Execution error
DDE = Device-dependent error
QUE = Query error
OPC = Operation complete

*ESR?

This query reads the Standard Event Status Event register. Reading the register clears it. The bit configuration is the same as the Standard Event Status Enable register (see *ESE).

*OPC
*OPC?

This command causes the instrument to set the OPC bit (bit 0) of the Standard Event Status register when the instrument has completed all pending operations. *Pending operations* are complete when:

- All commands sent before *OPC have been executed. This includes overlapped commands. Most commands are sequential and are completed before the next command is executed. Commands that affect output voltage, current or state, relays, and trigger actions are executed in parallel (or overlapped) with subsequent commands sent to the power supply. The *OPC command provides notification that all overlapped commands have been completed.
- All triggered actions are completed

*OPC does not prevent processing of subsequent commands, but bit 0 will not be set until all pending operations are completed.

*OPC? causes the instrument to place an ASCII "1" in the Output Queue when all pending operations are completed. Unlike *OPC, *OPC? prevents processing of all subsequent commands. It can be used at the end of a command line so that the program can monitor the bus for data until it receives the "1" from the Output Queue.

*SRE
*SRE?

This command sets the condition of the Service Request Enable Register. This register determines which bits from the Status Byte Register are allowed to set the Master Status Summary (MSS) bit and the Request for Service (RQS) summary bit. A 1 in any Service Request Enable Register bit position enables the corresponding Status Byte Register bit and all such enabled bits then are logically OR-ed to cause Bit 6 of the Status Byte Register to be set.

When the controller conducts a serial poll in response to SRQ, the RQS bit is cleared, but the MSS bit is not. When *SRE is cleared (by programming it with 0), the power supply cannot generate an SRQ to the controller. The query returns the current state of *SRE.

*STB?

This query reads the Status Byte register, which contains the status summary bits and the Output Queue MAV bit. Reading the Status Byte register does not clear it. The input summary bits are cleared when the appropriate event registers are read. The MAV bit is cleared at power-on, by *CLS' or when there is no more response data available.

A serial poll also returns the value of the Status Byte register, except that bit 6 returns Request for Service (RQS) instead of Master Status Summary (MSS). A serial poll clears RQS, but not MSS. When MSS is set, it indicates that the power supply has one or more reasons for requesting service.

Bit Position	7	6	5	4	3	2	1 – 0
Bit Value	128	64	32	16	8	4	–
Bit Name	OPER	MSS (RQS)	ESB	MAV	QUES	ERR	–

OPER = Operation status summary
MSS = Master status summary
(RQS) = Request for service
ESB = Event status byte summary
MAV = Message available
QUES = Questionable status summary
ERR = Error queue not empty

*WAI

This command instructs the power supply not to process any further commands until all pending operations are completed. Pending operations are as defined under the *OPC command. *WAI can be aborted only by sending the power supply a Device Clear command.

System Commands

System commands control system functions that are not directly related to output control, measurement, or status functions. Common commands are also used to control system functions.

SYSTem:COMMunicate:RLSTate LOCal|REMote|RWLock
SYSTem:COMMunicate:RLSTate?

This command configures the remote/local state of the instrument according to the following settings.

LOCal The instrument is set to front panel control (front panel keys are active).

REMote The instrument is set to remote interface control (front panel keys are active).

RWLock The front panel keys are disabled (the instrument can only be controlled via the remote interface).

The remote/local state can also be set by interface commands over the GPIB and some other I/O interfaces. When multiple remote programming interfaces are active, the interface with the most recently changed remote/local state determines the instrument's remote/local state.

The remote/local state is unaffected by *RST or any SCPI commands other than SYSTem:COMMunicate:RLState. At power-on however, the communications setting always returns to LOCal.

SYSTem:COMMunicate:TCPip:CONTrol?

This query returns the control connection port number. This is used to open a control socket connection to the instrument. Refer to chapter 4 under "Using Sockets" for more information.

SYSTem:ERRor?

This query returns the next error number and its corresponding message string from the error queue. The queue is a FIFO (first-in, first-out) buffer that stores errors as they occur. As it is read, each error is removed from the queue. When all errors have been read, the query returns 0, NO ERROR. If more errors are accumulated than the queue can hold, the last error in the queue will be -350, TOO MANY ERRORS (see Appendix C for error codes).

SYSTem:VERSion?

This query returns the SCPI version number to which the instrument complies. The returned value is of the form YYYY.V, where YYYY represents the year and V is the revision number for that year.

*IDN?

This query requests the power supply to identify itself. It returns a string of four fields separated by commas.

Agilent Technologies	Manufacturer
xxxxxA	Model number followed by a letter suffix
0	Zero or serial number if available
<A.xx.xx>,<A.xx.xx>	Firmware revision, power supply revision

*OPT?

This query requests the unit to identify any installed options. A *0* indicates no options are installed.

*RCL <state>

This command restores the power supply to a state that was previously stored in memory locations 0 through 15 with the *SAV command. Note that you can only recall a state from a location that contains a previously-stored state.

NOTE All saved instrument states are lost when the unit is turned off.

*RST

This command resets the power supply to a factory-defined state. This state is defined as follows. Note that *RST also forces an ABORt command. The *RST settings are as follows:

CAL:STAT	Off	[SOUR:]CURR:PROT:STAT	Off
INIT:CONT	Off	[SOUR:]VOLT	0
OUTP	Off	[SOUR:]VOLT:LIM	0
[SOUR:]CURR	0	[SOUR:]VOLT:TRIG	0
[SOUR:]CURR:TRIG	0	[SOUR:]VOLT:PROT	MAXimum

*SAV <state>

This command stores the present state of the power supply to memory locations 0 through 15.

NOTE All saved instrument states are lost when the unit is turned off.

*TST?

This query always returns a zero.

Trigger Commands

Trigger commands consist of the Abort, Trigger, and Initiate commands. Initiate commands initialize the trigger system. Trigger commands control the triggering of the power supply.

ABORt

This command cancels any trigger actions in progress and returns the trigger system to the IDLE state, unless INIT:CONT is enabled. It also resets the WTG bit in the Status Operation Condition register. ABORt is executed at power-on and upon execution of *RST.

INITiate[:IMMediate][:TRANsient]

This command controls the enabling of output triggers. When a trigger is enabled, a trigger causes the specified triggering action to occur. If the trigger system is not enabled, all triggers are ignored.

INITiate:CONTinuous[:TRANsient] ON|OFF
INITiate:CONTinuous[:TRANsient]?

This command continuously initiates output triggers. The enabled state is On (1); the disabled state is Off (0). When disabled, the trigger system must be initiated for each trigger with the INITiate command.

TRIGger[:TRANsient][:IMMediate]

If the trigger system has been initiated, this command generates an immediate output trigger. When sent, the output trigger will:

- Initiate an output change as specified by the CURR:TRIG or VOLT:TRIG settings.
- Clear the WTG bits in the Status Operation Condition register after the trigger action has completed.

TRIGger:SOURce BUS
TRIGger:SOURce?

This command selects the trigger source for the output trigger system. Only BUS can be selected as the trigger source.

*TRG

This command generates a trigger when the trigger source is set to BUS. The command has the same affect as the Group Execute Trigger (<GET>) command.

6
Programming Examples

Output Programming Example 84
Trigger Programming Example 86

This chapter contains several example programs to help you develop programs for your own application. The example programs are for illustration only, and are provided with the assumption that you are familiar with the programming language being demonstrated and the tools used to create and debug procedures. See Chapter 5, “Language Dictionary” for the SCPI command syntax.

You have a royalty-free right to use, modify, reproduce and distribute the example programs (and/or any modified version) in any way you find useful, provided you agree that Agilent Technologies has no warranty, obligations, or liability for any example programs.

The example programs are written in Microsoft Visual Basic 6.0 using the VISA COM IO library. The VISA COM library must be downloaded from the Automation-Ready CD-ROM to use these programs. For information about using VISA COM in another Visual Basic project, refer to “Programming Your Instruments” in the *USB/LAN/GPIB Interfaces Connectivity Guide*, also included on the Automation-Ready CD-ROM.

NOTE Example programs for the following programming environments are also included on the Product-Reference CD-ROM located at the back of this guide:
Microsoft Visual Basic 6.0
Microsoft Visual C++ 6.0
Microsoft Excel
The CD also contains IVI-COM and LabVIEW drivers for your power supply.

Output Programming Example

This program sets the voltage, current, over-voltage, and the over-current protection. It turns the output on and takes a voltage measurement. When done, the program checks for instrument errors and gives a message if there is an error.

```
Sub main_EZ()
    Dim IDN As String
    Dim IOaddress As String
    Dim ErrString As String

    ' This variable controls the voltage
    Dim VoltSetting As Double

    ' This variable measures the voltage
    Dim measVolt As Double

    ' This variable controls the current
    Dim CurrSetting As Double

    ' These variables control the over voltage protection settings
    Dim overVoltSetting As Double

    ' These variables control the over current protection
    Dim overCurrOn As Long

    'These variable are neccessary to initialize the VISA COM.
    Dim ioMgr As AgilentRMLib.SRMCls
    Dim Instrument As VisaComLib.FormattedIO488

    ' The following command line provides the program with the VISA name of the
    ' interface that it will communicate with. It is currently set to use GPIB.
    IOaddress = "GPIB0::5::INSTR"

    ' Use the following line for LAN communication
    ' IOaddress="TCPIP0::141.25.36.214"

    ' Use the following line instead for USB communication
    ' IOaddress = "USB0::2391::1799::N8741A-US00000002"

    ' Initialize the VISA COM communication
    Set ioMgr = New AgilentRMLib.SRMCls
    Set Instrument = New VisaComLib.FormattedIO488
    Set Instrument.IO = ioMgr.Open(IOaddress)

    VoltSetting = 3
    CurrSetting = 1.5                                    ' amps
    overVoltSetting = 10
    overCurrOn = 1                                       '1 for on, 0 for off

    With Instrument
        ' Send a power reset to the instrument
        .WriteString "*RST"

        ' Query the instrument for the IDN string
        .WriteString "*IDN?"
        IDN = .ReadString

        ' Set the voltage
        .WriteString "VOLT" & Str$(VoltSetting)
```

```
        ' Set the over voltage level
        .WriteString "VOLT:PROT:LEV " & Str$(overVoltSetting)

        ' Turn on over current protection
        .WriteString "CURR:PROT:STAT " & Str$(overCurrOn)

        ' Set the current level
        .WriteString "CURR " & Str$(CurrSetting)

        ' Turn the output on
        .WriteString "OUTP ON"

        ' Make sure that the output is on before continuing
        .WriteString "*OPC?"
        .ReadString

        ' Measure the voltage
        .WriteString "Meas:Volt?"
        measVolt = .ReadNumber
        MsgBox "Measured Voltage is " & Str$(measVolt)

        ' Check instrument for any errors
        .WriteString "Syst:err?"
        ErrString = .ReadString

        ' give message if there is an error
        If Val(ErrString) Then
            MsgBox "Error in instrument!" & vbCrLf & ErrString
        End If
    End With

End Sub
```

Trigger Programming Example

This example illustrates how to set up and trigger a voltage and current change. The voltage is measured before and after the trigger.

```
Sub main_Trig()
    Dim IDN As String
    Dim IOaddress As String
    Dim ErrString As String
    Dim msg1 As String

    ' This variable is used to monitor the status
    Dim stat As Long

    ' This variable controls the voltage
    Dim VoltSetting As Double

    ' This variable measures the voltage
    Dim MeasureVolt As Double

    ' This variable controls the current
    Dim CurrSetting As Double

    ' This variable represents the trigger current setting
    Dim trigCurrSetting As Double

    ' This variable controls the triggered voltage setting
    Dim trigVoltSetting As Double

    ' This constant represents the register value for Waiting for Trigger
    Const WTG = 32

    ' These variables are necessary to initialize the VISA COM
    Dim ioMgr As AgilentRMLib.SRMCls
    Dim Instrument As VisaComLib.FormattedIO488

    ' The following line provides the VISA name of the GPIB interface
    IOaddress = "GPIB0::5::INSTR"

    ' Use the following line instead for LAN communication
    ' IOaddress="TCPIP0::141.25.36.214"

    ' Use the following line instead for USB communication
    ' IOaddress = "USB0::2391::1799::N8741A-US00000002"

    ' Initialize the VISA COM communication
    Set ioMgr = New AgilentRMLib.SRMCls
    Set Instrument = New VisaComLib.FormattedIO488
    Set Instrument.IO = ioMgr.Open(IOaddress)

    VoltSetting = 3                                 ' volts
    CurrSetting = 2                                 ' amps
    trigVoltSetting = 5                             ' volts
    trigCurrSetting = 3                             ' amps

    With Instrument
        ' Send a power reset to the instrument
        .WriteString "*RST"

        ' Query the instrument for the IDN string
        .WriteString "*IDN?"
        IDN = .ReadString
```

```
        ' Set the voltage
        .WriteString "VOLT" & Str$(VoltSetting)

        ' Set the current level
        .WriteString "CURR " & Str$(CurrSetting)

        ' Set the triggered voltage and current levels
        .WriteString "VOLT:TRIG " & Str$(trigVoltSetting)
        .WriteString "CURR:TRIG " & Str$(trigCurrSetting)

        ' Turn the output on
        .WriteString "OUTP ON"

        ' Make sure that the output is on
        .WriteString "*OPC?"
        .ReadString

        ' Measure the voltage before triggering the change
        .WriteString "MEAS:VOLT?"
        MeasureVolt = .ReadNumber

        ' Save the value for later display
        msg1$ = "Voltage before trigger = " & Str$(MeasureVolt)

        ' Initiate the trigger system
        .WriteString "INIT"

        ' Make sure that the trigger system is initiated
        Do
            .WriteString "STAT:OPER:COND?"
            stat = .ReadNumber
        Loop Until ((stat And WTG) = WTG)

        ' Trigger the unit
        .WriteString "*TRG"

        'Make sure that the trigger is done
        .WriteString "*OPC?"
        .ReadString

        ' Measure the voltage after triggering the change
        .WriteString "MEAS:VOLT?"
        MeasureVolt = .ReadNumber

        ' Display the measured values
        MsgBox msg1$ + Chr$(13) + "Voltage after trigger = " & Str$(MeasureVolt)

        ' Check instrument for any errors
        .WriteString "Syst:err?"
        ErrString = .ReadString

        ' Give message if there is an error
        If Val(ErrString) Then
            MsgBox "Error in instrument!" & vbCrLf & ErrString
        End If
    End With

End Sub
```



Appendix A
Specifications

Performance Specifications 90
Supplemental Characteristics 91
Outline Diagram 94

This chapter lists the specifications and supplemental characteristics of the Agilent N8700 power supplies. A dimensional line drawing of the unit is included at the end of the chapter.

Unless otherwise noted, specifications are warranted over the ambient temperature range of 0°to 40°C. Sensing is at the rear terminals of the power supply after a 30-minute warm-up period. Sense terminals are externally jumpered to their respective output terminals.

Supplemental characteristics are not warranted but are descriptions of typical performance determined either by design or type testing.

Performance Specifications

Agilent Models N8731A – N8742A and Models N8754A – N8762A

Model 3.3kW 5kW	N8731A	N8732A	N8733A	N8734A N8754A	N8735A N8755A	N8736A N8756A	N8737A N8757A	N8738A N8758A	N8739A N8759A	N8740A N8760A	N8741A N8761A	N8742A N8762A
DC Output Ratings: NOTE 1												
Voltage 3.3kW	8V	10V	15V	20V	30V	40V	60V	80V	100V	150V	300V	600V
Voltage 5kW				20V	30V	40V	60V	80V	100V	150V	300V	600V
Current 3.3kW	400A	330A	220A	165A	110A	85A	55A	42A	33A	22A	11A	5.5A
Current 5kW				250A	170A	125A	85A	65A	50A	34A	17A	8.5A
Power 3.3kW	3.2kW	3.3kW	3.3kW	3.3kW	3.3kW	3.4kW	3.3kW	3.36kW	3.3kW	3.3kW	3.3kW	3.3kW
Power 5kW				5kW	5.1kW	5kW	5.1kW	5.2kW	5kW	5.1kW	5.1kW	5.1kW
Output Ripple and Noise:												
CV p-p NOTE 2 3.3kW	60mV	60mV	60mV	60mV	60mV	60mV	60mV	80mV	100mV	100mV	300mV	500mV
CV p-p NOTE 2 5kW				75mV	75mV	75mV	75mV	100mV	100mV	120mV	300mV	500mV
CV rms NOTE 3 3.3kW	8mV	8mV	8mV	8mV	8mV	8mV	8mV	25mV	25mV	25mV	100mV	120mV
CV rms NOTE 3 5kW				10mV	10mV	10mV	10mV	15mV	15mV	25mV	60mV	120mV
Load Effect: (change from 10% to 90% of full load)												
Voltage 3.3kW	6.2mV	6.5mV	7.3mV	8mV	9.5mV	11mV	14mV	17mV	20mV	27.5mV	50mV	95mV
Voltage 5kW				8mV	9.5mV	11mV	14mV	17mV	20mV	27.5mV	50mV	95mV
Current 3.3kW	85mA	71mA	49mA	38mA	27mA	22mA	16mA	13.4mA	11.6mA	9.4mA	7.2mA	6.1mA
Current 5kW				250mA	170mA	125mA	85mA	65mA	50mA	34mA	17mA	8.5mA
Source Effect: (change from 170-265 Vac for 200 Vac models, or 342-460 Vac for 400 Vac models; with constant load)												
Voltage 3.3kW	2.8mV	3mV	3.5mV	4mV	5mV	6mV	8mV	10mV	12mV	17mV	32mV	62mV
Voltage 5kW				2mV	3mV	4mV	6mV	8mV	10mV	15mV	30mV	60mV
Current 3.3kW	42mA	35mA	24mA	18.5mA	13mA	10.5mA	7.5mA	6.2mA	5.3mA	4.2mA	3.1mA	2.6mA
Current 5kW				125mA	85mA	62.5mA	42.5mA	32.5mA	25mA	17mA	8.5mA	4.3mA
Programming Accuracy: NOTE 1												
Voltage 3.3kW 0.05%+	4mV	5mV	7.5mV	10mV	15mV	20mV	30mV	40mV	50mV	75mV	150mV	300mV
Voltage 5kW 0.025%+				15mV	22.5mV	30mV	45mV	60mV	75mV	112.5mV	225mV	450mV
Current 3.3kW 0.1%+	800mA	660mA	440mA	330mA	220mA	170mA	110mA	84mA	66mA	44mA	22mA	11mA
Current 5kW 0.1%+				750mA	510mA	375mA	255mA	195mA	150mA	102mA	51mA	25.5mA
Measurement Accuracy:												
Voltage 3.3kW 0.1%+	8mV	10mV	15mV	20mV	30mV	40mV	60mV	80mV	100mV	150mV	300mV	600mV
Voltage 5kW 0.025%+				25mV	37.5mV	50mV	75mV	100mV	125mV	187.5mV	375mV	750mV
Current 3.3kW 0.1%+	1.2A	990mA	660mA	495mA	330mA	255mA	165mA	126mA	99mA	66mA	33mA	16.5mA
Current 5kW 0.1%+				750mA	510mA	375mA	255mA	195mA	150mA	102mA	51mA	25.5mA
Load Transient Recovery Time: (time for output voltage to recover within 0.5% of its rated output for a load change from 10% to 90% of its rated output current)												
Time 3.3kW	≤ 1 ms	≤ 1 ms	≤ 1 ms	≤ 1ms	≤ 1ms	≤ 1ms	≤ 1ms	≤ 1ms	≤ 1ms	≤ 2ms	≤ 2ms	≤ 2ms
Time 5kW				≤ 1ms	≤ 1ms	≤ 1ms	≤ 1ms	≤ 1ms	≤ 1ms	≤ 2ms	≤ 2ms	≤ 2ms
Output set point	From 10% to 100% of rated output											

NOTE 1 Minimum voltage is guaranteed to a maximum of 0.2% of the rated output voltage.
Minimum current is guaranteed to a maximum of 0.4% of the rated output current.

NOTE 2 20MHz

NOTE 3 From 5Hz - 1MHz

Supplemental Characteristics

Agilent Models N8731A – N8742A and Models N8754A – N8762A

Model 3.3kW / 5kW	N8731A	N8732A	N8733A	N8734A N8754A	N8735A N8755A	N8736A N8756A	N8737A N8757A	N8738A N8758A	N8739A N8759A	N8740A N8760A	N8741A N8761A	N8742A N8762A
Output Response Time: (to settle to within ±1.0% of the rated output, with a resistive load)												
Up, full load 3.3kW	0.08s	0.08s	0.08s	0.08s	0.08s	0.08s	0.15s	0.15s	0.15s	0.15s	0.15s	0.25s
Up, full load 5kW				0.03s	0.03s	0.03s	0.05s	0.05s	0.05s	0.05s	0.05s	0.1s
Down, full load 3.3kW	0.02s	0.1s	0.1s	0.1s	0.16s	0.16s	0.16s	0.3s	0.3s	0.3s	0.3s	0.5s
Down, full load 5kW				0.05s	0.08s	0.08s	0.08s	0.1s	0.1s	0.1s	0.1s	0.2s
Down, no load 3.3kW	0.5s	0.6s	0.7s	0.8s	0.9s	1.0s	1.1s	1.2s	1.5s	2.0s	3.5s	4.0s
Down, no load 5kW				0.7s	0.8s	0.9s	1.0s	1.2s	1.5s	2.0s	2.5s	3.0s
Command Response Time: (add this to the output response time to obtain the total programming time)												
55 ms												
Remote Sense Compensation: (the load lead drop reduces the maximum available voltage at the load)												
Volts/load lead 3.3kW	2V	2V	2V	2V	5V	5V	5V	5V	5V	5V	5V	5V
Volts/load lead 5kW				2V	5V	5V	5V	5V	5V	5V	5V	5V
Over-voltage Protection:												
Range 3.3kW	0.5-10	0.5-12	1-18	1-24V	2-36V	2-44V	5-66V	5-88V	5-110V	5-165V	5-330V	5-660V
Range 5kW				1-24V	2-36V	2-44V	5-66V	5-88V	5-110V	5-165V	5-330V	5-660V
Accuracy 3.3kW	0.08V	0.1V	0.15V	0.2V	0.3V	0.4V	0.6V	0.8V	1V	1.5V	3V	6V
Accuracy 5kW				0.2V	0.3V	0.4V	0.6V	0.8V	1V	1.5V	3V	6V
Output Ripple and Noise: (for 8V-15V models, from 2V to 100% of rated output; for all other models, from 10% to 100% of rated output;)												
CC rms 3.3kW	1.3A	1.2A	880mA	660mA	300mA	200mA	100mA	80mA	70mA	60mA	20mA	10mA
CC rms 5kW				1.0A	460mA	300mA	150mA	120mA	100mA	90mA	30mA	15mA
Programming Resolution:												
Measurement Resolution:												
Voltage 3.3kW	0.96mV	1.2mV	1.8mV	2.4mV	3.6mV	4.8mV	7.2mV	9.6mV	12mV	18mV	36mV	72mV
Voltage 5kW				2.4mV	3.6mV	4.8mV	7.2mV	9.6mV	12mV	18mV	36mV	72mV
Current 3.3kW	48mA	39.6mA	26.4mA	19.8mA	13.2mA	10.2mA	6.6mA	5.0mA	4.0mA	2.6mA	1.3mA	0.66mA
Current 5kW				30mA	20.4mA	15mA	10.2mA	7.8mA	6.0mA	4.1mA	2.0mA	1.0mA
Front Panel Display Accuracy: (4 digits; ±1 count)												
Voltage 3.3kW	40mV	50mV	75mV	100mV	150mV	200mV	300mV	400mV	500mV	750mV	1.5 V	3.0 V
Voltage 5kW				100mV	150mV	200mV	300mV	400mV	500mV	750mV	1.5 V	3.0 V
Current 3.3kW	2.0A	1.65A	1.10A	825mA	550mA	425mA	275mA	210mA	165mA	110mA	55mA	27.5mA
Current 5kW				1.25A	850mA	625mA	425mA	325mA	250mA	170mA	85mA	42.5mA
Temperature Stability: (over 8 hours, after a 30 minute warm-up, with constant line, load, and temperature)												
Voltage 3.3kW	4mV	5mV	7.5mV	10mV	15mV	20mV	30mV	40mV	50mV	75mV	150mV	300mV
Voltage 5kW				10mV	15mV	20mV	30mV	40mV	50mV	75mV	150mV	300mV
Current 3.3kW	200mA	165mA	110mA	82.5mA	55mA	42.5mA	27.5mA	21mA	16.5mA	11mA	5.5mA	2.8mA
Current 5kW				125mA	85mA	62.5mA	42.5mA	32.5mV	25mV	17mA	8.5mA	4.3mA

Supplemental Characteristics (continued)

Model	3.3kW 5kW	N8731A	N8732A	N8733A	N8734A N8754A	N8735A N8755A	N8736A N8756A	N8737A N8757A	N8738A N8758A	N8739A N8759A	N8740A N8760A	N8741A N8761A	N8742A N8762A
Temperature Coefficient: (after a 30 minute warm-up)													
Voltage 3.3kW units	100 PPM/°C from rated output voltage												
Voltage 5kW units	100 PPM/°C from rated output voltage												
Current 3.3kW units	200 PPM/°C from rated output current												
Current 5kW units	100 PPM/°C from rated output current												
Analog Programming and Monitoring:													
Vout voltage	0 - 100%, 0-5V or 0-10V, user selectable, Accuracy & linearity = ± 0.5% of rated Vout												
Iout voltage	0 - 100%, 0-5V or 0-10V, user selectable, Accuracy & linearity = ± 1% of rated Iout												
Vout resistance	0 - 100%, 0-5kΩ or 0-10kΩ, user selectable, Accuracy & linearity = ± 1% of rated Vout												
Iout resistance	0 - 100%, 0-5kΩ or 0-10kΩ, user selectable, Accuracy & linearity = ± 1.5% of rated Iout												
Iout monitor	0-5V or 0-10V, user selectable, Accuracy = ± 1%												
Vout monitor	0-5V or 0-10V, user selectable, Accuracy = ± 1%												
On/Off control	Electrical voltage; 0-0.6V or 2-15V or dry contact, user selectable logic												
PS OK signal	TTL high (4-5V) = OK; 0V = FAIL; 500Ω series resistance												
CV/CC signal 3.3kW	CV = TTL high (4-5V) source current 10 mA; CC = TTL low (0-0.6V) sink current 10 mA												
CV/CC signal 5kW	Open collector; CV mode: OFF, CC mode: ON, Maximum voltage = 30V; Maximum sink current = 10 mA												
Enable/Disable	Dry contact. Open=Off, Short=On. Maximum voltage at terminal = 6V.												
Series and Parallel Capability:													
Parallel operation	Up to 4 identical units can be connected in master/slave mode with single–wire current balancing												
Series operation	Up to 2 identical units can be connected using external protection diodes (see Output Terminal Isolation)												
Savable states:													
In volatile memory	16 (in memory locations 0-15)												
Interface Capabilities:													
GPIB	SCPI - 1993, IEEE 488.2 compliant interface												
LXI Compliance	Class C (only apples to units with the LXI label on the front panel)												
USB 2.0	Requires Agilent IO Library version M.01.01 and up, or 14.0 and up												
10/100 LAN	Requires Agilent IO Library version L.01.01 and up, or 14.0 and up												
Environmental Conditions:													
Environment	Indoor use, installation category II (AC input), pollution degree 2												
Operating temp.	0°C to 40°C @ 100% load												
Storage temp.	–20°C to 70°C												
Operating humidity	30% to 90% relative humidity (no condensation)												
Storage humidity	10% to 95% relative humidity (no condensation)												
Altitude	Up to 3000 meters. Above 2000m, derate the output current by 2%/100m **and** derate the maximum ambient temperature by 1°C/100m.												
Built-in Web server	Requires Internet Explorer 5+ or Netscape 6.2+												
LED statement	Any LEDs used in this product are Class 1 LEDs as per IEC 825-1												
Output Terminal Isolation:													
8V to 60V units	No output terminal may be more than ± 60 VDC from any other terminal or chassis ground.												
80V to 600V units	No Positive output terminal may be more than ± 600 VDC from any other terminal or chassis ground. No Negative output terminal may be more than ± 400 VDC from any other terminal or chassis ground.												

Supplemental Characteristics (continued)

Model	3.3kW 5kW	N8731A	N8732A	N8733A	N8734A N8754A	N8735A N8755A	N8736A N8756A	N8737A N8757A	N8738A N8758A	N8739A N8759A	N8740A N8760A	N8741A N8761A	N8742A N8762A

Regulatory Compliance:

EMC

Complies with the European EMC directive 89/336/EEC for Class A test and measurement products.
Complies with the Australian standard and carries the C-Tick mark.
This ISM device complies with Canadian ICES-001. Cet appareil ISM est conforme à la norme NMB-001 du Canada.
Electrostatic discharges >1 kV near the I/O connectors may cause the unit to reset and require operator intervention.

Safety

Complies with the European Low Voltage Directive 73/23/EEC and carries the CE-marking.
Complies with the US and Canadian safety standards for test and measurement products.

Acoustic Noise Declaration:

Statements provided to comply with requirements of the German Sound Emission Directive, from 18 January 1991:
Sound Pressure Lp <70 dB(A), * At Operator Position, * Normal Operation, * According to EN 27779 (Type Test).
Schalldruckpegel Lp <70 dB(A) * Am Arbeitsplatz, * Normaler Betrieb, * Nach EN 27779 (Typprüfung).

AC Input:

Nominal Input	
3.3kW 2-phase	ALL Models: 190 – 240 Vac; 50/60Hz
3.3kW & 5kW 3-phase	200 Vac Models: 190 – 240 Vac; 50/60Hz
3.3kW & 5kW 3-phase	400 Vac Models: 380 – 415 Vac; 50/60Hz
Input Current	
3.3kW 2-phase	ALL Models: 23 – 24A Max @ 100% load
3.3kW 3-phase	200 Vac Models: 13.6 – 14.5A Max @ 100% load
3.3kW 3-phase	400 Vac Models: 6.8 – 7.2A Max @ 100% load
5kW 3-phase	200 Vac Models: 21 – 22A Max @ 100% load
5kW 3-phase	400 Vac Models: 10.5 – 12A Max @ 100% load
Input Range	
2-phase models	170 – 265 Vac; 47 – 63 Hz
3-phase, 200V models	170 – 265 Vac; 47 – 63 Hz
3-phase, 400V models	342 – 460 Vac; 47 – 63 Hz
Input VA	
3.3kW units	4000 VA
5kW units	5800 VA
Power Factor	
3.3kW units	2-phase models: 0.99 at nominal input and rated output power
3.3kW units	3-phase models: 0.95 at nominal input and rated output power
5kW units	3-phase models: 0.94 at nominal input and rated output power
Efficiency	
3.3kW units	82% – 88%
5kW units	83% – 88%
Inrush Current	
2-phase models	< 50A
3-phase, 200V models	< 50A
3-phase, 400V models	< 20A

Outline Diagram

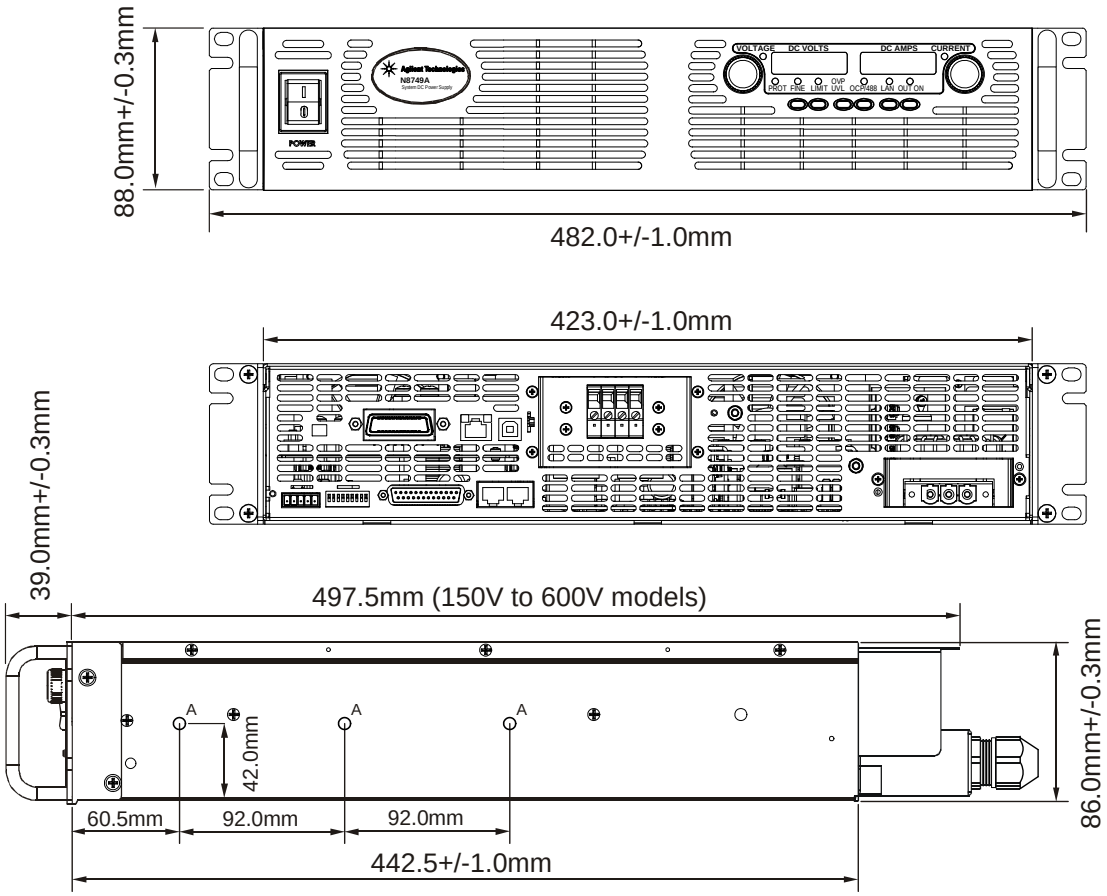

Bus-Bar Detail
8V to 100V Models

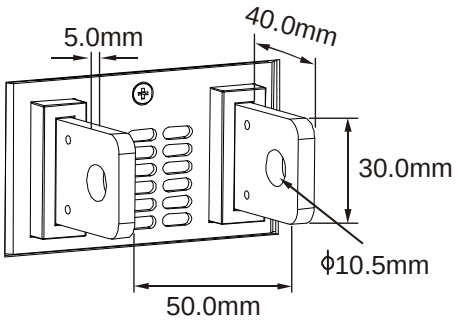

Output Cover Detail
8V to 100V Models

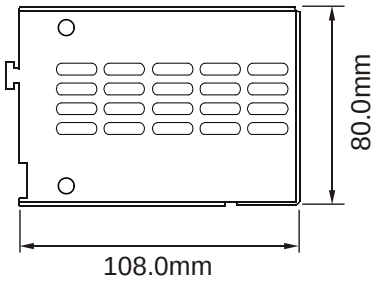

NOTES:
Holes marked “A” are for chassis slide mounting.
Use only screws designated #10-32x0.38” maximum.

Appendix B
Verification and Calibration

Verification 95
Calibration 124

The verification procedures described in this appendix verify that the power supply is operating normally and is within published specifications.

This appendix also includes calibration procedures for the Agilent N8700 power supplies. Instructions are given for performing the procedures from a controller over the GPIB.

NOTE Perform the verification tests before calibrating your power supply. If the power supply passes the verification tests, the unit is operating within its calibration limits and does not need to be re-calibrated.

The recommended calibration interval for Agilent N8700 power supplies is one year.

Verification

Verification procedures are of two types:

Performance These procedures verify that the power supply is operating normaly and meets all of the published specifications listed in Appendix A. These tests also verify the power supply is properly calibrated.

Calibration These procedures calibrate the power supply and set operation within the published specifications. Calibration is recommended annually.

If the power supply fails any of the verification tests, perform the calibration procedures. If calibration is unsuccessful, return the unit to an Agilent Technologies repair facility (see Appendix D).

Equipment Required

The equipment listed in the following table, or the equivalent to this equipment, is required for the calibration and performance tests. Test records for all models are at the end of this verification section.

Type	Specifications	Recommended Model
Digital Voltmeter	Resolution: 10 nV @ 1V; Readout: 8 1/2 digits; Accuracy: 20 ppm	Agilent 3458A or equivalent
Current Monitor	15A (0.1Ω) 0.04%, TC=4ppm/°C 100A (0.01Ω) 0.04%, TC=4ppm/°C 300A (0.001Ω) 0.04%, TC=4ppm/°C 500A (0.0005Ω) 0.04%, TC=4ppm/°C	Guildline 9230/15 Guildline 9230/100 Guildline 9230/300 Guildline 9230/500
Load Resistor (nominal values)	For 3.3 kW models: 0.02Ω, 0.03Ω, 0.068Ω, 0.12Ω, 0.27Ω, 0.47Ω, 1.1Ω, 1.9Ω, 3.0Ω, 6.8Ω, 27.3Ω, 109Ω - all resistors 3.5 kW minimum. For 5 kW models: 0.08Ω, 0.176Ω, 0.32Ω, 0.705Ω, 1.23Ω, 2.0Ω, 4.40Ω, 17.6Ω, 70.6Ω - all resistors 5.5 kW minimum.	
Electronic Load	150V, 400A, 3.3kW minimum for Models N8731- N8740A 150V, 250A, 5kW minimum for Models N8754- N8760A	Up to 4 Agilent N3300A mainframes; up to 11 N3305A modules; up to 9 N3306A modules - or equivalent
GPIB Controller	Full GPIB capabilities - for calibrating over the GPIB	Agilent 82350B or equivalent
Oscilloscope	Sensitivity: 1 mV: Bandwidth Limit: 20 MHz Probe: 1:1 with RF tip	Agilent Infiniium or equivalent
RMS Voltmeter	True RMS; Bandwidth: 20 MHz; Sensitivity: 100V	Rhode and Schwartz Model URE3 or equivalent
Differential Amplifier	Bandwidth: 20 MHz	LeCroy 1855A, DA1850A, or equivalent
Terminations	1 – 50Ω BNC termination 2 – 50Ω, 1/8W termination resistors	
Variable-voltage xfmr or AC source	Power: 3 Phase 24KVA; Range: 180-235V 47 - 63Hz; 360- 440V 47 - 63Hz	Superior Powerstat 1156DT-3Y, 0-280V, 50A, 24.2 KVA or equivalent

Test Records

Test records for each power supply model are provided after the test procedure sections.

3.3 kW test records are provided followed by the 5 kW test records.

Measurement Techniques

Electronic Load

Many of the test procedures require the use of a variable load capable of dissipating the required power. If a variable resistor is used, switches should be used to either; connect, disconnect, or short the load resistor. For most tests, an electronic load can be used. The electronic load is considerably easier to use than load resistors, but it may not be fast enough to test transient recovery time and may be too noisy for the noise (PARD) tests.

Fixed load resistors may be used in place of a variable load, with minor changes to the test procedures. Also, if computer controlled test setups are used, the relatively slow (compared to computers and system voltmeters) settling times and slew rates of the power supply may have to be taken into account. "Wait" statements can be used in the test program if the test system is faster than the power supply.

Current-Monitoring Resistor

The 4-terminal current shunt is used to eliminate output current measurement error caused by voltage drops in the load leads and connections. It has special current-monitoring terminals inside the load connection terminals. Connect the voltmeter directly to these current-monitoring terminals.

Test Set-up

The following figure illustrates the test set-up used for the verification procedures.

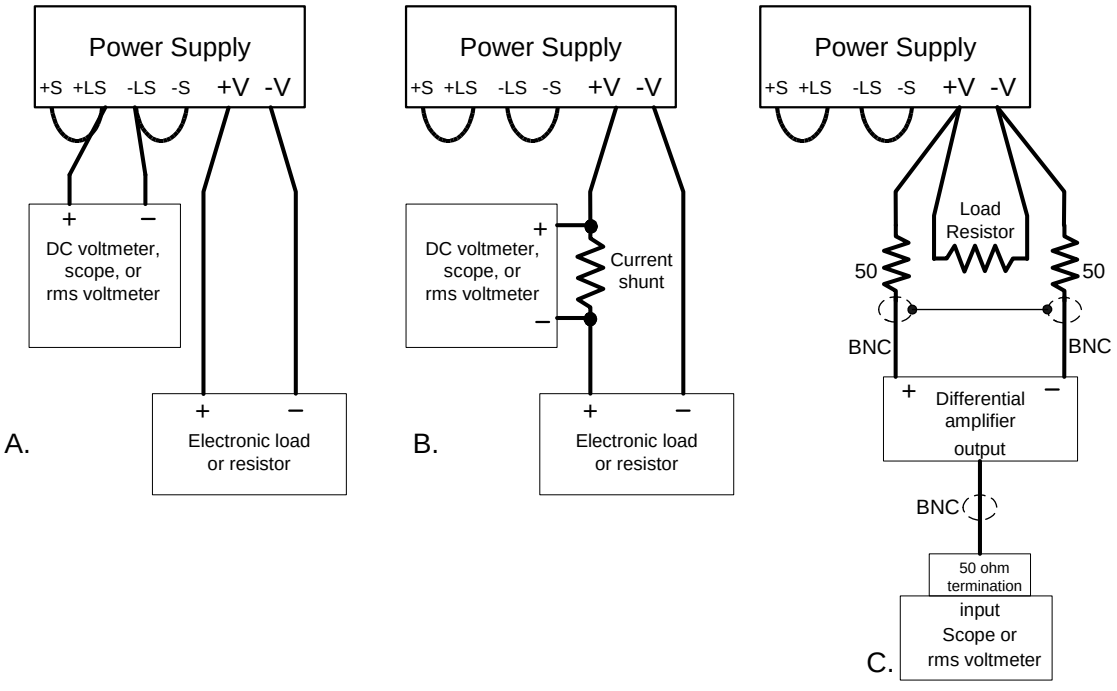

Constant Voltage Tests

NOTE A test record for each model is provided in the following section. Refer to the appropriate test record for instrument settings for each of the following tests.

Voltage Programming and Readback Accuracy

Test category = performance, calibration

This test verifies that the voltage programming and measurement functions are within specifications.

1. Turn off the power supply and connect a DVM directly across the +S and -S terminals as shown in figure A. Do not connect a load.
2. Turn on the power supply and program the output voltage to zero and the output current to its maximum programmable value (Imax) with the load off. The CV annunciator should be on and the output current reading should be approximately zero.
3. Record the output voltage readings on the digital voltmeter (DVM) as well as the measurement readback. The readings should be within the limits specified in the test record for the model being tested under Voltage Programming and Readback, Minimum Voltage Vout.
4. Program the output voltage to its full-scale rating.
5. Record the output voltage readings on the DVM as well as the measurement readback. The readings should be within the limits specified in the test record for the appropriate model under Voltage Programming and Readback, High Voltage Vout.

CV Load Effect

Test category = performance

This test measures the change in output voltage resulting from a change in output current from full load to no load.

1. Turn off the power supply and connect a DVM and an electronic load as shown in figure A.
2. Turn on the power supply and program the output current to its maximum programmable value (Imax) and the output voltage to its full-scale value.
3. Set the electronic load for the output's full-scale current. The CV annunciator on the front panel must be on. If it is not, adjust the load so that the output current drops slightly.
4. Record the output voltage reading from the DVM.
5. Open the load and record the voltage reading from the DVM again. The difference between the DVM readings in steps 4 and 5 is the load effect, which should not exceed the value listed in the test record for the appropriate model under CV Load Effect.

CV Source Effect

Test category = performance

This test measures the change in output voltage that results from a change in AC line voltage from the minimum to maximum value within the line voltage specifications.

1. Turn off the power supply and connect the ac power line through a variable voltage transformer.
2. Connect a DVM and an electronic load as shown in figure A. Set the variable voltage transformer to nominal line voltage.
3. Turn on the power supply and program the output current to its maximum programmable value (Imax) and the output voltage to its full-scale value.
4. Set the electronic load for the output's full-scale current. The CV annunciator on the front panel must be on. If it is not, adjust the load so that the output current drops slightly.
5. Adjust the transformer to the low-line voltage (170 VAC for 200 nominal line; 342 VAC for 400 nominal line).
6. Record the output voltage reading from the DVM.
7. Adjust the transformer to the high-line voltage (265 VAC for 200 nominal line; 460 VAC for 400 nominal line).
8. Record the output voltage reading on the DVM. The difference between the DVM reading in steps 6 and 8 is the source effect, which should not exceed the value listed in the test record for the appropriate model under CV Source Effect.

CV Noise

Test category = performance

Periodic and random deviations in the output combine to produce a residual AC voltage superimposed on the DC output voltage. This residual voltage is specified as the rms or peak-to-peak output voltage in the frequency range specified in Appendix A.

1. Turn off the power supply and connect the load resistor, differential amplifier, and an oscilloscope (ac coupled) to the output as shown in figure C. Use the indicated load resistor for 3.3kW outputs; use the indicated load resistor for 5kW outputs.
2. As shown in the diagram, use two BNC cables to connect the differential amplifier to the + and – output terminals. Each cable should be terminated by a 50 Ω resistor. The shields of the two BNC cables should be connected together. Connect the output of the differential amplifier to the oscilloscope with a 50 Ω termination at the input of the oscilloscope.
3. Set the differential amplifier to multiply by ten, divide by one, and 1 Megohm input resistance. The positive and negative inputs of the differential amplifier should be set to AC coupling. Set the oscilloscope's time base to 5 ms/div, and the vertical scale to 10 mV/div. Turn the bandwidth limit on (usually 20 or 30 MHz), and set the sampling mode to peak detect.

4 Program the power supply to program the output current to its maximum programmable value (Imax) and the output voltage to its full-scale value and enable the output. Let the oscilloscope run for a few seconds to generate enough measurement points. On the Agilent Infiniium scope, the maximum peak-to-peak voltage measurement is indicated at the bottom of the screen on the right side. Divide this value by 10 to get the CV peak-to-peak noise measurement. The result should not exceed the peak-to-peak limits in the test record form for the appropriate model under CV Ripple and Noise, peak-to-peak.
(If the measurement contains any question marks, clear the measurement and try again. This means that some of the data received by the scope was questionable.)

5 Disconnect the oscilloscope and connect an ac rms voltmeter in its place. Do not disconnect the 50 Ω termination. Divide the reading of the rms voltmeter by 10. The result should not exceed the rms limits in the test record for the appropriate model under CV Ripple and Noise - rms.

Transient Recovery Time

Test category = performance

This measures the time for the output voltage to recover to within the specified value following a 10% to 90% change in the load current.

1 Turn off the power supply and connect the output as in figure A with the oscilloscope across the +S and -S terminals.

2 Turn on the power supply and program the output current to its maximum programmable value (Imax) and the output voltage to its full-scale value. **Do not program voltages greater than 200 VDC when testing the 300 and 600 volt models**.

3 Set the electronic load to operate in constant current mode. Program its load current to 10% of the power supply's full-scale current value.

4 Set the electronic load's transient generator frequency to 100 Hz and its duty cycle to 50%.

5 Program the load's transient current level to 90% of the power supply's full-scale current value. Turn the transient generator on.

6 Adjust the oscilloscope for a waveform similar to that shown in the following figure.

7 The output voltage should return to within the specified voltage in the specified time following the 10% to 90% load change. Check both loading and unloading transients by triggering on the positive and negative slope. Record the voltage at time "t" in the performance test record under Transient Response.

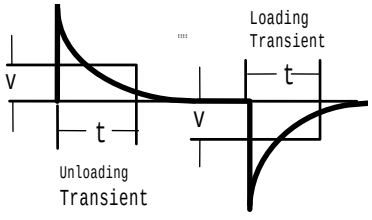

Constant Current Tests

NOTE A test record for each model is provided in the following section. Refer to the appropriate test record for instrument settings for each of the following tests.

Current Programming and Readback Accuracy

Test category = performance, calibration

This test verifies that the current programming and measurement functions are within specifications.

1. Turn off the power supply and connect the current shunt directly across the output. Connect the DVM across the current shunt.
2. Turn on the power supply and program the output voltage to its full-scale value and the output current to zero. The CC annunciator should be on and the output voltage reading should be approximately zero.
3. Divide the voltage drop (DVM reading) across the current shunt by its resistance to convert to amps and record this value (Iout). Also record the current measurement readback. The readings should be within the limits specified in the test record for the appropriate model under Current Programming and Readback, Minimum Current Iout.
4. Program the output current to its full-scale rating.
5. Divide the voltage drop (DVM reading) across the current shunt by its resistance to convert to amps and record this value (Iout). Also record the current measurement readback. The readings should be within the limits specified in the test record for the appropriate model under Current Programming and Readback, High Current Iout.

CC Load Effect

Test category = performance

This test measures the change in output current resulting from a change in output voltage from full scale to short circuit.

1. Turn off the power supply and connect the current shunt, DVM, and electronic load as shown in figure B. Connect the DVM directly across the current shunt.
2. To ensure that the values read during this test are not the instantaneous measurement of the AC peaks of the output current ripple, several DC measurements should be made and averaged. If you are using an Agilent 3458A, you can set up the voltmeter to do this automatically. From the instrument's front panel, program 100 power line cycles per measurement. Press NPLC 100 ENTER.
3. Turn on the power supply and program the output current to its full-scale value and the output voltage to its maximum programmable value (Vmax).

4 With the electronic load in CV mode, set it for the output's full-scale voltage. The CC annunciator on the front panel must be on. If it is not, adjust the load so that the voltage drops slightly.

5 Divide the voltage drop (DVM reading) across the current monitoring resistor by its resistance to convert to amps and record this value (Iout).

6 Short the electronic load. Divide the voltage drop (DVM reading) across the current shunt by its resistance to convert to amps and record this value (Iout). The difference in the current readings in steps 4 and 5 is the load effect, which should not exceed the value listed in the test record for the appropriate model under CC Load Effect.

CC Source Effect

Test category = performance

This test measures the change in output current that results from a change in AC line voltage from the minimum to maximum value within the line voltage specifications.

1 Turn off the power supply and connect the ac power line through a variable voltage transformer or AC source.

2 Connect the current shunt, DVM, and electronic load as shown in figure B. Connect the DVM directly across the current shunt. Set the variable voltage transformer to nominal line voltage.

3 To ensure that the values read during this test are not the instantaneous measurement of the AC peaks of the output current ripple, several DC measurements should be made and averaged. If you are using an Agilent 3458A, you can set up the voltmeter to do this automatically. From the instrument's front panel, program 100 power line cycles per measurement. Press NPLC 100 ENTER.

4 Turn on the power supply and program the output current to its full-scale value and the output voltage to its maximum programmable value (Vmax).

5 With the electronic load in CV mode, set it for the output's full-scale voltage. The CC annunciator on the front panel must be on. If it is not, adjust the load so that the voltage drops slightly.

6 Adjust the transformer to the lowest rated line voltage (170 VAC for 200 nominal line; 342 VAC for 400 nominal line).

7 Divide the voltage drop (DVM reading) across the current monitoring resistor by its resistance to convert to amps and record this value (Iout).

8 Adjust the transformer to the highest rated line voltage (265 VAC for 200 nominal line; 460 VAC for 400 nominal line).

9 Divide the voltage drop (DVM reading) across the current shunt by its resistance to convert to amps and record this value (Iout). The difference between the DVM reading in steps 6 and 8 is the source effect, which should not exceed the value listed in the test record for the appropriate model under CC Source Effect.

Test Record – Agilent N8731A [8V, 400A, 3.3kW]

Agilent N8731A	Report No _____	Date _____	
Description	**Minimum Specs.**	**Results**	**Maximum Specs.**
Voltage Programming & Readback			
Minimum Voltage Vout	0 mV	_____	+ 20 mV
Measurement Readback	Vout – 8 mV	_____	Vout + 8 mV
High Voltage Vout	7.992 V	_____	8.008 V
Measurement Readback	Vout – 16 mV	_____	Vout + 16 mV
CV Load Effect	– 6.2 mV	_____	+ 6.2 mV
CV Source Effect	– 2.8 mV	_____	+ 2.8 mV
CV Ripple and Noise			
peak-to-peak	N/A	_____	60 mV
rms	N/A	_____	8 mV
Transient Response			
Voltage @ 1 ms	– 40 mV	_____	+ 40 mV
Current Programming & Readback			
Minimum Current Iout	0 mA	_____	+ 2.4 A
Measurement Readback	Iout – 1.2 A	_____	Iout + 1.2 A
High Current Iout	398.8 A	_____	401.2 A
Measurement Readback	Iout – 1.6 A	_____	Iout + 1.6 A
CC Load Effect	– 85 mA	_____	+ 85 mA
CC Source Effect	– 42 mA	_____	+ 42 mA

Test Description	N8731A Settings
Voltage Programming & Readback, Min Voltage	≤16 mV, 1.6A
Voltage Programming & Readback, High Voltage	8V, 1.6A
CV Load Effect, Source Effect, Ripple and Noise	8V, 400A
Transient Response	8V, from 40A to 360A
Current Programming & Readback, Min Current	1.6A, 8V
Current Programming & Readback, High Current	400A, 8V
CC Load Effect, Source Effect	400A, 8V

N8731A Load Requirements	
Current shunt	0.0005Ω 500 A
Agilent N3300 Electronic load modules	6 – N3306A
Fixed Resistor for CV Ripple and Noise	0.02Ω 3.5 kW

Test Record – Agilent N8732A [10V, 330A, 3.3kW]

Agilent N8732A	Report No _____	Date _____	
Description	**Minimum Specs.**	**Results**	**Maximum Specs.**
Voltage Programming & Readback			
Minimum Voltage Vout	0 mV	_____	+ 25 mV
Measurement Readback	Vout – 10 mV	_____	Vout + 10 mV
High Voltage Vout	9.990 V	_____	10.010 V
Measurement Readback	Vout – 20 mV	_____	Vout + 20 mV
CV Load Effect	– 6.5 mV	_____	+ 6.5 mV
CV Source Effect	– 3 mV	_____	+ 3 mV
CV Ripple and Noise			
peak-to-peak	N/A	_____	60 mV
rms	N/A	_____	8 mV
Transient Response			
Voltage @ 1 ms	– 50 mV	_____	+ 50 mV
Current Programming & Readback			
Minimum Current Iout	0 mA	_____	+ 1.98 A
Measurement Readback	Iout – 990 mA	_____	Iout + 990 mA
High Current Iout	329.01 A	_____	330.99 A
Measurement Readback	Iout – 1.32 A	_____	Iout + 1.32 A
CC Load Effect	– 71 mA	_____	+ 71 mA
CC Source Effect	– 35 mA	_____	+ 35 mA

Test Description	N8732A Settings
Voltage Programming & Readback, Min Voltage	≤20 mV, 1.32A
Voltage Programming & Readback, High Voltage	10V, 1.32A
CV Load Effect, Source Effect, Ripple and Noise	10V, 330A
Transient Response	10V, from 33A to 297A
Current Programming & Readback, Min Current	1.32A, 10V
Current Programming & Readback, High Current	330A, 10V
CC Load Effect, Source Effect	330A, 10V

N8732A Load Requirements	
Current shunt	0.0005Ω 500 A
Agilent N3300 Electronic load modules	6 – N3306A
Fixed Resistor for CV Ripple and Noise	0.03Ω 3.5 kW

Test Record – Agilent N8733A [15V, 220A, 3.3kW]

Agilent N8733A	Report No _____	Date _____	
Description	**Minimum Specs.**	**Results**	**Maximum Specs.**
Voltage Programming & Readback			
Minimum Voltage Vout	0 mV	_____	+ 37.5 mV
Measurement Readback	Vout – 15 mV	_____	Vout + 15 mV
High Voltage Vout	14.985 V	_____	15.015 V
Measurement Readback	Vout – 30 mV	_____	Vout + 30 mV
CV Load Effect	– 7.3 mV	_____	+ 7.3 mV
CV Source Effect	– 3.5 mV	_____	+ 3.5 mV
CV Ripple and Noise			
peak-to-peak	N/A	_____	60 mV
rms	N/A	_____	8 mV
Transient Response			
Voltage @ 1 ms	– 75 mV	_____	+ 75 mV
Current Programming & Readback			
Minimum Current Iout	0 mA	_____	+ 1.32 A
Measurement Readback	Iout – 660 mA	_____	Iout + 660 mA
High Current Iout	219.34 A	_____	220.66 A
Measurement Readback	Iout – 880 mA	_____	Iout + 880 mA
CC Load Effect	– 49 mA	_____	+ 49 mA
CC Source Effect	– 24 mA	_____	+ 24 mA

Test Description	N8733A Settings
Voltage Programming & Readback, Min Voltage	≤30 mV, 880 mA
Voltage Programming & Readback, High Voltage	15V, 880 mA
CV Load Effect, Source Effect, Ripple and Noise	15V, 220 A
Transient Response	15V, from 22A to 198A
Current Programming & Readback, Min Current	880 mA, 15V
Current Programming & Readback, High Current	220A, 15V
CC Load Effect, Source Effect	220A, 15V

N8733A Load Requirements	
Current shunt	0.001Ω 300A
Agilent N3300 Electronic load modules	6 – N3306A
Fixed Resistor for CV Ripple and Noise	0.068Ω 3.5 kW

Test Record – Agilent N8734A [20V, 165A, 3.3kW]

Agilent N8734A	Report No _____	Date _____	
Description	**Minimum Specs.**	**Results**	**Maximum Specs.**
Voltage Programming & Readback			
Minimum Voltage Vout	0 mV	_____	+ 50 mV
Measurement Readback	Vout – 20 mV	_____	Vout + 20 mV
High Voltage Vout	19.98 V	_____	20.02 V
Measurement Readback	Vout – 40 mV	_____	Vout + 40 mV
CV Load Effect	– 8 mV	_____	+ 8 mV
CV Source Effect	– 4 mV	_____	+ 4 mV
CV Ripple and Noise			
peak-to-peak	N/A	_____	60 mV
rms	N/A	_____	8 mV
Transient Response			
Voltage @ 1 ms	– 100 mV	_____	+ 100 mV
Current Programming & Readback			
Minimum Current Iout	0 mA	_____	+ 990 mA
Measurement Readback	Iout – 495 mA	_____	Iout + 495 mA
High Current Iout	164.505 A	_____	165.495 A
Measurement Readback	Iout – 660 mA	_____	Iout + 660 mA
CC Load Effect	– 38 mA	_____	+ 38 mA
CC Source Effect	– 18.5 mA	_____	+ 18.5 mA

Test Description	N8734A Settings
Voltage Programming & Readback, Min Voltage	≤40 mV, 660 mA
Voltage Programming & Readback, High Voltage	20V, 660 mA
CV Load Effect, Source Effect, Ripple and Noise	20V, 165A
Transient Response	20V, from 16.5A to 148.5A
Current Programming & Readback, Min Current	660 mA, 20V
Current Programming & Readback, High Current	165A, 20V
CC Load Effect, Source Effect	165A, 20V

N8734A Load Requirements	
Current shunt	0.001Ω 300 A
Agilent N3300 Electronic load modules	6 – N3306A
Fixed Resistor for CV Ripple and Noise	0.21Ω 3.5 kW

Test Record – Agilent N8735A [30V, 110A, 3.3kW]

Agilent N8735A	Report No _____	Date _____	
Description	**Minimum Specs.**	**Results**	**Maximum Specs.**
Voltage Programming & Readback			
Minimum Voltage Vout	0 mV	_____	+ 75 mV
Measurement Readback	Vout – 30 mV	_____	Vout + 30 mV
High Voltage Vout	29.97 V	_____	30.03 V
Measurement Readback	Vout – 60 mV	_____	Vout + 60 mV
CV Load Effect	– 9.5 mV	_____	+ 9.5 mV
CV Source Effect	– 5 mV	_____	+ 5 mV
CV Ripple and Noise			
peak-to-peak	N/A	_____	60 mV
rms	N/A	_____	8 mV
Transient Response			
Voltage @ 1 ms	– 150 mV	_____	+ 150 mV
Current Programming & Readback			
Minimum Current Iout	0 mA	_____	+660 mA
Measurement Readback	Iout –330 mA	_____	Iout + 330 mA
High Current Iout	109.67 A	_____	110.33 A
Measurement Readback	Iout – 440 mA	_____	Iout + 440 mA
CC Load Effect	– 27 mA	_____	+ 27 mA
CC Source Effect	– 13 mA	_____	+ 13 mA

Test Description	N8735A Settings
Voltage Programming & Readback, Min Voltage	≤60 mV, 440 mA
Voltage Programming & Readback, High Voltage	30V, 440 mA
CV Load Effect, Source Effect, Ripple and Noise	30V, 110 A
Transient Response	30V, from 11A to 99A
Current Programming & Readback, Min Current	440 mA, 30V
Current Programming & Readback, High Current	110A, 30V
CC Load Effect, Source Effect	110A, 30V

N8735A Load Requirements	
Current shunt	0.01Ω 100 A
Agilent N3300 Electronic load modules	6 – N3306A
Fixed Resistor for CV Ripple and Noise	0.27Ω 3.5 kW

Test Record – Agilent N8736A [40V, 85A, 3.3kW]

Agilent N8736A	Report No _____	Date _____	
Description	**Minimum Specs.**	**Results**	**Maximum Specs.**
Voltage Programming & Readback			
Minimum Voltage Vout	0 mV	_____	+ 100 mV
Measurement Readback	Vout – 40 mV	_____	Vout + 40 mV
High Voltage Vout	39.96 V	_____	40.04 V
Measurement Readback	Vout – 80 mV	_____	Vout + 80 mV
CV Load Effect	– 11 mV	_____	+ 11 mV
CV Source Effect	– 6 mV	_____	+ 6 mV
CV Ripple and Noise			
peak-to-peak	N/A	_____	60 mV
rms	N/A	_____	8 mV
Transient Response			
Voltage @ 1 ms	– 200 mV	_____	+ 200 mV
Current Programming & Readback			
Minimum Current Iout	0 mA	_____	+ 510 mA
Measurement Readback	Iout – 255 mA	_____	Iout + 255 mA
High Current Iout	84.745 A	_____	85.255 A
Measurement Readback	Iout – 340 mA	_____	Iout + 340 mA
CC Load Effect	– 22 mA	_____	+ 22 mA
CC Source Effect	– 10.5 mA	_____	+ 10.5 mA

Test Description	N8736A Settings
Voltage Programming & Readback, Min Voltage	≤80 mV, 340 mA
Voltage Programming & Readback, High Voltage	40V, 340 mA
CV Load Effect, Source Effect, Ripple and Noise	40V, 85A
Transient Response	40V, from 8.5A to 76.5A
Current Programming & Readback, Min Current	720 mA, 40V
Current Programming & Readback, High Current	85A, 40V
CC Load Effect, Source Effect	85A, 40V

N8736A Load Requirements	
Current shunt	0.01Ω 100 A
Agilent N3300 Electronic load modules	6 – N3306A
Fixed Resistor for CV Ripple and Noise	0.47Ω 3.5 kW

Test Record – Agilent N8737A [60V, 55A, 3.3kW]

Agilent N8737A	Report No _____	Date _____	
Description	**Minimum Specs.**	**Results**	**Maximum Specs.**
Voltage Programming & Readback			
Minimum Voltage Vout	0 mV	_____	+ 150 mV
Measurement Readback	Vout – 60 mV	_____	Vout + 60 mV
High Voltage Vout	59.94 V	_____	60.06 V
Measurement Readback	Vout – 120 mV	_____	Vout + 120 mV
CV Load Effect	– 14 mV	_____	+ 14 mV
CV Source Effect	– 8 mV	_____	+ 8 mV
CV Ripple and Noise			
peak-to-peak	N/A	_____	60 mV
rms	N/A	_____	8 mV
Transient Response			
Voltage @ 1 ms	– 300 mV	_____	+ 300 mV
Current Programming & Readback			
Minimum Current Iout	0 mA	_____	+ 330 mA
Measurement Readback	Iout – 165 mA	_____	Iout + 165 mA
High Current Iout	54.835 A	_____	55.165 A
Measurement Readback	Iout – 220 mA	_____	Iout + 220 mA
CC Load Effect	– 16 mA	_____	+ 16 mA
CC Source Effect	– 7.5 mA	_____	+ 7.5 mA

Test Description	N8737A Settings
Voltage Programming & Readback, Min Voltage	≤120 mV, 220 mA
Voltage Programming & Readback, High Voltage	60V, 220 mA
CV Load Effect, Source Effect, Ripple and Noise	60V, 55A
Transient Response	60V, from 5.5A to 49.5A
Current Programming & Readback, Min Current	220 mA, 60V
Current Programming & Readback, High Current	55A, 60V
CC Load Effect, Source Effect	55A, 60V

N8737A Load Requirements	
Current shunt	0.01Ω 100 A
Agilent N3300 Electronic load modules	6 – N3306A
Fixed Resistor for CV Ripple and Noise	1.1Ω 3.5 kW

Test Record – Agilent N8738A [80V, 42A, 3.3kW]

Agilent N8738A	Report No _____	Date _____	
Description	**Minimum Specs.**	**Results**	**Maximum Specs.**
Voltage Programming & Readback			
Minimum Voltage Vout	0 mV	_____	+ 200 mV
Measurement Readback	Vout – 80 mV	_____	Vout + 80 mV
High Voltage Vout	79.92 V	_____	80.08 V
Measurement Readback	Vout – 160 mV	_____	Vout + 160 mV
CV Load Effect	– 17 mV	_____	+ 17 mV
CV Source Effect	– 10 mV	_____	+ 10 mV
CV Ripple and Noise			
peak-to-peak	N/A	_____	80 mV
rms	N/A	_____	25 mV
Transient Response			
Voltage @ 1 ms	– 400 mV	_____	+ 400 mV
Current Programming & Readback			
Minimum Current Iout	0 mA	_____	+ 252 mA
Measurement Readback	Iout – 126 mA	_____	Iout + 126 mA
High Current Iout	41.874 A	_____	42.126 A
Measurement Readback	Iout – 168 mA	_____	Iout + 168 mA
CC Load Effect	– 13.4 mA	_____	+ 13.4 mA
CC Source Effect	– 6.2 mA	_____	+ 6.2 mA

Test Description	N8738A Settings
Voltage Programming & Readback, Min Voltage	≤160 mV, 168 mA
Voltage Programming & Readback, High Voltage	80V, 168 mA
CV Load Effect, Source Effect, Ripple and Noise	80V, 42A
Transient Response	80V, from 4.2A to 37.8A
Current Programming & Readback, Min Current	168 mA, 80V
Current Programming & Readback, High Current	42A, 80V
CC Load Effect, Source Effect	42A, 80V

N8738A Load Requirements	
Current shunt	0.01Ω 100 A
Agilent N3300 Electronic load modules	7 – N3305A
Fixed Resistor for CV Ripple and Noise	1.9Ω 3.5 kW

Test Record – Agilent N8739A [100V, 33A, 3.3kW]

Agilent N8739A	Report No _____	Date _____	
Description	**Minimum Specs.**	**Results**	**Maximum Specs.**
Voltage Programming & Readback			
Minimum Voltage Vout	0 mV	_____	+ 250 mV
Measurement Readback	Vout – 100 mV	_____	Vout + 100 mV
High Voltage Vout	99.9 V	_____	100.1 V
Measurement Readback	Vout – 200 mV	_____	Vout + 200 mV
CV Load Effect	– 20 mV	_____	+ 20 mV
CV Source Effect	– 12 mV	_____	+ 12 mV
CV Ripple and Noise			
peak-to-peak	N/A	_____	100 mV
rms	N/A	_____	25 mV
Transient Response			
Voltage @ 1 ms	– 500 mV	_____	+ 500 mV
Current Programming & Readback			
Minimum Current Iout	0 mA	_____	+198 mA
Measurement Readback	Iout – 99 mA	_____	Iout + 99 mA
High Current Iout	32.901 A	_____	33.099 A
Measurement Readback	Iout – 132 mA	_____	Iout + 132 mA
CC Load Effect	– 11.6 mA	_____	+ 11.6 mA
CC Source Effect	– 5.3 mA	_____	+ 5.3 mA

Test Description	N8739A Settings
Voltage Programming & Readback, Min Voltage	≤200 mV, 132 mA
Voltage Programming & Readback, High Voltage	100V, 132 mA
CV Load Effect, Source Effect, Ripple and Noise	100V, 33A
Transient Response	100V, from 3.3A to 29.7A
Current Programming & Readback, Min Current	132 mA, 100V
Current Programming & Readback, High Current	33A, 100V
CC Load Effect, Source Effect	33A, 100V

N8739A Load Requirements	
Current shunt	0.01Ω 100 A
Agilent N3300 Electronic load modules	7 – N3305A
Fixed Resistor for CV Ripple and Noise	3.0Ω 3.5 kW

Test Record – Agilent N8740A [150V, 22A, 3.3kW]

Agilent N8740A	Report No _____	Date _____	
Description	**Minimum Specs.**	**Results**	**Maximum Specs.**
Voltage Programming & Readback			
Minimum Voltage Vout	0 mV	_____	+ 375 mV
Measurement Readback	Vout – 150 mV	_____	Vout + 150 mV
High Voltage Vout	149.85 V	_____	150.15 V
Measurement Readback	Vout – 300 mV	_____	Vout + 300 mV
CV Load Effect	– 27.5 mV	_____	+ 27.5 mV
CV Source Effect	– 17 mV	_____	+ 17 mV
CV Ripple and Noise			
peak-to-peak	N/A	_____	100 mV
rms	N/A	_____	25 mV
Transient Response			
Voltage @ 2 ms	– 750 mV	_____	+ 750 mV
Current Programming & Readback			
Minimum Current Iout	0 mA	_____	+ 132 mA
Measurement Readback	Iout – 66 mA	_____	Iout + 66 mA
High Current Iout	21.934 A	_____	22.066 A
Measurement Readback	Iout – 88 mA	_____	Iout + 88 mA
CC Load Effect	– 9.4 mA	_____	+ 9.4 mA
CC Source Effect	– 4.2 mA	_____	+ 4.2 mA

Test Description	N8740A Settings
Voltage Programming & Readback, Min Voltage	≤300 mV, 88 mA
Voltage Programming & Readback, High Voltage	150V, 88 mA
CV Load Effect, Source Effect, Ripple and Noise	150V, 22A
Transient Response	150V, from 2.2A to 19.8A
Current Programming & Readback, Min Current	88 mA, 150V
Current Programming & Readback, High Current	22A, 150V
CC Load Effect, Source Effect	22A, 150V

N8740A Load Requirements	
Current shunt	0.01Ω 100 A
Agilent N3300 Electronic load modules	7 – N3305A
Fixed Resistor for CV Ripple and Noise	6.8Ω 3.5 kW

Test Record – Agilent N8741A [300V, 11A, 3.3kW]

Agilent N8741A	Report No _____	Date _____	
Description	**Minimum Specs.**	**Results**	**Maximum Specs.**
Voltage Programming & Readback			
Minimum Voltage Vout	0 mV	_____	+ 750 mV
Measurement Readback	Vout – 300 mV	_____	Vout + 300 mV
High Voltage Vout	299.7 V	_____	300.3 V
Measurement Readback	Vout – 600 mV	_____	Vout + 600 mV
CV Load Effect	– 50 mV	_____	+ 50 mV
CV Source Effect	– 32 mV	_____	+ 32 mV
CV Ripple and Noise			
peak-to-peak	N/A	_____	300 mV
rms	N/A	_____	100 mV
Transient Response			
Voltage @ 2 ms	– 1.5V	_____	+ 1.5V
Current Programming & Readback			
Minimum Current Iout	0 mA	_____	+ 66 mA
Measurement Readback	Iout – 33 mA	_____	Iout + 33 mA
High Current Iout	10.967 A	_____	11.033 A
Measurement Readback	Iout – 44 mA	_____	Iout + 44 mA
CC Load Effect	– 7.2 mA	_____	+ 7.2 mA
CC Source Effect	– 3.1 mA	_____	+ 3.1 mA

Test Description	N8741A Settings
Voltage Programming & Readback, Min Voltage	≤600 mV, 44 mA
Voltage Programming & Readback, High Voltage	300V, 44 mA
CV Load Effect, Source Effect, Ripple and Noise	300V, 11A
Transient Response	200V, from 1.1A to 9.9A
Current Programming & Readback, Min Current	44 mA, 300V
Current Programming & Readback, High Current	11A, 300V
CC Load Effect, Source Effect	11A, 300V

N8741A Load Requirements	
Current shunt	0.1Ω 15 A
Use fixed resistor instead of load modules	27.3Ω 3.5 kW (or Amrel 5KW 600V 300A electronic load)
Fixed Resistor for CV Ripple and Noise	27.3Ω 3.5 kW

Test Record – Agilent N8742A [600V, 5.5A, 3.3kW]

Agilent N8742A	Report No _____	Date _____	
Description	**Minimum Specs.**	**Results**	**Maximum Specs.**
Voltage Programming & Readback			
Minimum Voltage Vout	0 mV	_____	+ 1.5 V
Measurement Readback	Vout – 600 mV	_____	Vout + 600 mV
High Voltage Vout	599.4 V	_____	600.6 V
Measurement Readback	Vout – 1.2 V	_____	Vout + 1.2 V
CV Load Effect	– 95 mV	_____	+ 95 mV
CV Source Effect	– 62 mV	_____	+ 62 mV
CV Ripple and Noise			
peak-to-peak	N/A	_____	500 mV
rms	N/A	_____	120 mV
Transient Response			
Voltage @ 2 ms	– 3V	_____	+ 3V
Current Programming & Readback			
Minimum Current Iout	0 mA	_____	+ 33 mA
Measurement Readback	Iout – 16.5 mA	_____	Iout + 16.5 mA
High Current Iout	5.4835 A	_____	5.5165 A
Measurement Readback	Iout – 22 mA	_____	Iout + 22 mA
CC Load Effect	– 6.1 mA	_____	+ 6.1 mA
CC Source Effect	– 2.6 mA	_____	+ 2.6 mA

Test Description	N8742A Settings
Voltage Programming & Readback, Min Voltage	≤1.2V, 22 mA
Voltage Programming & Readback, High Voltage	600V, 22 mA
CV Load Effect, Source Effect, Ripple and Noise	600V, 5.5A
Transient Response	200V, from 0.55A to 4.95A
Current Programming & Readback, Min Current	22 mA, 600V
Current Programming & Readback, High Current	5.5A, 600V
CC Load Effect, Source Effect	5.5A, 600V

N8742A Load Requirements	
Current shunt	0.1Ω 15 A
Use fixed resistor instead of load modules	109Ω 3.5 kW (or Amrel 5KW 600V 300A electronic load)
Fixed Resistor for CV Ripple and Noise	109Ω 3.5 kW

Test Record – Agilent N8754A [20V, 250A, 5kW]

Agilent N8754A	Report No _____	Date _____	
Description	**Minimum Specs.**	**Results**	**Maximum Specs.**
Voltage Programming & Readback			
Minimum Voltage Vout	0 mV	_____	+ 55 mV
Measurement Readback	Vout – 25 mV	_____	Vout + 25 mV
High Voltage Vout	19.98 V	_____	20.02 V
Measurement Readback	Vout – 30 mV	_____	Vout + 30 mV
CV Load Effect	– 8 mV	_____	+ 8 mV
CV Source Effect	– 2 mV	_____	+ 2 mV
CV Ripple and Noise			
peak-to-peak	N/A	_____	75 mV
rms	N/A	_____	10 mV
Transient Response			
Voltage @ 1 ms	– 100 mV	_____	+ 100 mV
Current Programming & Readback			
Minimum Current Iout	0 mA	_____	+ 1.75 A
Measurement Readback	Iout – 750 mA	_____	Iout + 750 mA
High Current Iout	249 A	_____	251 A
Measurement Readback	Iout – 1.0 A	_____	Iout + 1.0 A
CC Load Effect	– 250 mA	_____	+ 250 mA
CC Source Effect	– 125 mA	_____	+ 125 mA

Test Description	N8754A Settings
Voltage Programming & Readback, Min Voltage	≤30 mV, 1A
Voltage Programming & Readback, High Voltage	20V, 1A
CV Load Effect, Source Effect, Ripple and Noise	20V, 250A
Transient Response	20V, from 25A to 225A
Current Programming & Readback, Min Current	1A, 20V
Current Programming & Readback, High Current	250A, 20V
CC Load Effect, Source Effect	250A, 20V

N8754A Load Requirements	
Current shunt	0.001Ω 300 A
Agilent N3300 Electronic load modules	9 – N3306A
Fixed Resistor for CV Ripple and Noise	0.08Ω 5.5 kW

Test Record – Agilent N8755A [30V, 170A, 5kW]

Agilent N8755A	Report No _____	Date _____	
Description	**Minimum Specs.**	**Results**	**Maximum Specs.**
Voltage Programming & Readback			
Minimum Voltage Vout	0 mV	_____	+ 82.5 mV
Measurement Readback	Vout – 37.5 mV	_____	Vout + 37.5 mV
High Voltage Vout	29.97 V	_____	30.03 V
Measurement Readback	Vout – 45 mV	_____	Vout + 45 mV
CV Load Effect	– 9.5 mV	_____	+ 9.5 mV
CV Source Effect	– 3 mV	_____	+ 3 mV
CV Ripple and Noise			
peak-to-peak	N/A	_____	75 mV
rms	N/A	_____	10 mV
Transient Response			
Voltage @ 1 ms	– 150 mV	_____	+ 150 mV
Current Programming & Readback			
Minimum Current Iout	0 mA	_____	+ 1.19 A
Measurement Readback	Iout – 510 mA	_____	Iout + 510 mA
High Current Iout	169.32 A	_____	170.68 A
Measurement Readback	Iout – 680 mA	_____	Iout + 680 mA
CC Load Effect	– 170 mA	_____	+ 170 mA
CC Source Effect	– 85 mA	_____	+ 85 mA

Test Description	N8755A Settings
Voltage Programming & Readback, Min Voltage	≤45 mV, 680 mA
Voltage Programming & Readback, High Voltage	30V, 680 mA
CV Load Effect, Source Effect, Ripple and Noise	30V, 170 A
Transient Response	30V, from 17A to 153A
Current Programming & Readback, Min Current	680 mA, 30V
Current Programming & Readback, High Current	170A, 30V
CC Load Effect, Source Effect	170A, 30V

N8755A Load Requirements	
Current shunt	0.001Ω 300 A
Agilent N3300 Electronic load modules	9 – N3306A
Fixed Resistor for CV Ripple and Noise	0.176Ω 5.5 kW

Test Record – Agilent N8756A [40V, 125A, 5kW]

Agilent N8756A	Report No _____	Date _____	
Description	**Minimum Specs.**	**Results**	**Maximum Specs.**
Voltage Programming & Readback			
Minimum Voltage Vout	0 mV	_____	+ 110 mV
Measurement Readback	Vout – 50 mV	_____	Vout + 50 mV
High Voltage Vout	39.96 V	_____	40.04 V
Measurement Readback	Vout – 60 mV	_____	Vout + 60 mV
CV Load Effect	– 11 mV	_____	+ 11 mV
CV Source Effect	– 4 mV	_____	+ 4 mV
CV Ripple and Noise			
peak-to-peak	N/A	_____	75 mV
rms	N/A	_____	10 mV
Transient Response			
Voltage @ 1 ms	– 200 mV	_____	+ 200 mV
Current Programming & Readback			
Minimum Current Iout	0 mA	_____	+ 875 mA
Measurement Readback	Iout – 375 mA	_____	Iout + 375 mA
High Current Iout	124.5 A	_____	125.5 A
Measurement Readback	Iout – 500 mA	_____	Iout + 500 mA
CC Load Effect	– 125 mA	_____	+ 125 mA
CC Source Effect	– 62.5 mA	_____	+ 62.5 mA

Test Description	N8756A Settings
Voltage Programming & Readback, Min Voltage	≤60 mV, 500 mA
Voltage Programming & Readback, High Voltage	40V, 500 mA
CV Load Effect, Source Effect, Ripple and Noise	40V, 125A
Transient Response	40V, from 12.5A to 112.5A
Current Programming & Readback, Min Current	500 mA, 40V
Current Programming & Readback, High Current	125A, 40V
CC Load Effect, Source Effect	125A, 40V

N8756A Load Requirements	
Current shunt	0.001Ω 300 A
Agilent N3300 Electronic load modules	9 – N3306A
Fixed Resistor for CV Ripple and Noise	0.32Ω 5.5 kW

Test Record – Agilent N8757A [60V, 85A, 5kW]

Agilent N8757A	Report No _____	Date _____	
Description	**Minimum Specs.**	**Results**	**Maximum Specs.**
Voltage Programming & Readback			
Minimum Voltage Vout	0 mV	_____	+ 165 mV
Measurement Readback	Vout – 75 mV	_____	Vout + 75 mV
High Voltage Vout	59.94 V	_____	60.06 V
Measurement Readback	Vout – 90 mV	_____	Vout + 90 mV
CV Load Effect	– 14 mV	_____	+ 14 mV
CV Source Effect	– 6 mV	_____	+ 6 mV
CV Ripple and Noise			
peak-to-peak	N/A	_____	75 mV
rms	N/A	_____	10 mV
Transient Response			
Voltage @ 1 ms	– 300 mV	_____	+ 300 mV
Current Programming & Readback			
Minimum Current Iout	0 mA	_____	+ 595 mA
Measurement Readback	Iout – 255 mA	_____	Iout +255 mA
High Current Iout	84.66 A	_____	85.34 A
Measurement Readback	Iout – 340 mA	_____	Iout + 340 mA
CC Load Effect	– 85 mA	_____	+ 85 mA
CC Source Effect	– 42.5 mA	_____	+ 42.5 mA

Test Description	N8757A Settings
Voltage Programming & Readback, Min Voltage	≤90 mV, 340 mA
Voltage Programming & Readback, High Voltage	60V, 340 mA
CV Load Effect, Source Effect, Ripple and Noise	60V, 85A
Transient Response	60V, from 8.5A to 76.5A
Current Programming & Readback, Min Current	340 mA, 60V
Current Programming & Readback, High Current	85A, 60V
CC Load Effect, Source Effect	85A, 60V

N8757A Load Requirements	
Current shunt	0.01Ω 100 A
Agilent N3300 Electronic load modules	9 – N3306A
Fixed Resistor for CV Ripple and Noise	0.705Ω 5.5 kW

Test Record – Agilent N8758A [80V, 65A, 5kW]

Agilent N8758A	Report No _____	Date _____	
Description	**Minimum Specs.**	**Results**	**Maximum Specs.**
Voltage Programming & Readback			
Minimum Voltage Vout	0 mV	_____	+ 220 mV
Measurement Readback	Vout – 100 mV	_____	Vout + 100 mV
High Voltage Vout	79.92 V	_____	80.08 V
Measurement Readback	Vout – 120 mV	_____	Vout + 120 mV
CV Load Effect	– 17 mV	_____	+ 17 mV
CV Source Effect	– 8 mV	_____	+ 8 mV
CV Ripple and Noise			
peak-to-peak	N/A	_____	100 mV
rms	N/A	_____	15 mV
Transient Response			
Voltage @ 1 ms	– 400 mV	_____	+ 400 mV
Current Programming & Readback			
Minimum Current Iout	0 mA	_____	+ 455 mA
Measurement Readback	Iout – 195 mA	_____	Iout + 195 mA
High Current Iout	79.74 A	_____	80.26 A
Measurement Readback	Iout – 260 mA	_____	Iout + 260 mA
CC Load Effect	– 65 mA	_____	+ 65 mA
CC Source Effect	– 32.5 mA	_____	+ 32.5 mA

Test Description	N8758A Settings
Voltage Programming & Readback, Min Voltage	≤120 mV, 260 mA
Voltage Programming & Readback, High Voltage	80V, 260 mA
CV Load Effect, Source Effect, Ripple and Noise	80V, 65A
Transient Response	80V, from 6.5A to 58.5A
Current Programming & Readback, Min Current	260 mA, 80V
Current Programming & Readback, High Current	65A, 80V
CC Load Effect, Source Effect	65A, 80V

N8758A Load Requirements	
Current shunt	0.01Ω 100 A
Agilent N3300 Electronic load modules	11 – N3305A
Fixed Resistor for CV Ripple and Noise	1.23Ω 5.5 kW

Test Record – Agilent N8759A [100V, 50A, 5kW]

Agilent N8759A	Report No _____		Date _____
Description	**Minimum Specs.**	**Results**	**Maximum Specs.**
Voltage Programming & Readback			
Minimum Voltage Vout	0 mV	_____	+ 275 mV
Measurement Readback	Vout – 125 mV	_____	Vout + 125 mV
High Voltage Vout	99.9 V	_____	100.1 V
Measurement Readback	Vout – 150 mV	_____	Vout + 150 mV
CV Load Effect	– 20 mV	_____	+ 20 mV
CV Source Effect	– 10 mV	_____	+ 10 mV
CV Ripple and Noise			
peak-to-peak	N/A	_____	100 mV
rms	N/A	_____	15 mV
Transient Response			
Voltage @ 1 ms	– 500 mV	_____	+ 500 mV
Current Programming & Readback			
Minimum Current Iout	0 mA	_____	+ 350 mA
Measurement Readback	Iout – 150 mA	_____	Iout +150 mA
High Current Iout	99.8 A	_____	100.2 A
Measurement Readback	Iout – 200 mA	_____	Iout + 200 mA
CC Load Effect	– 50 mA	_____	+ 50 mA
CC Source Effect	– 25 mA	_____	+ 25 mA

Test Description	N8759A Settings
Voltage Programming & Readback, Min Voltage	≤150 mV, 200 mA
Voltage Programming & Readback, High Voltage	100V, 200 mA
CV Load Effect, Source Effect, Ripple and Noise	100V, 50A
Transient Response	100V, from 5A to 45A
Current Programming & Readback, Min Current	200 mA, 100V
Current Programming & Readback, High Current	50A, 100V
CC Load Effect, Source Effect	50A, 100V

N8759A Load Requirements	
Current shunt	0.01Ω 100 A
Agilent N3300 Electronic load modules	11 – N3305A
Fixed Resistor for CV Ripple and Noise	2.0Ω 5.5 kW

Test Record – Agilent N8760A [150V, 34A, 5kW]

Agilent N8760A	Report No _____	Date _____	
Description	**Minimum Specs.**	**Results**	**Maximum Specs.**
Voltage Programming & Readback			
Minimum Voltage Vout	0 mV	_____	+ 422.5 mV
Measurement Readback	Vout – 187 mV	_____	Vout + 187 mV
High Voltage Vout	149.85 V	_____	150.15 V
Measurement Readback	Vout – 225 mV	_____	Vout + 225 mV
CV Load Effect	– 27.5 mV	_____	+ 27.5 mV
CV Source Effect	– 15 mV	_____	+ 15 mV
CV Ripple and Noise			
peak-to-peak	N/A	_____	120 mV
rms	N/A	_____	25 mV
Transient Response			
Voltage @ 2 ms	– 750 mV	_____	+ 750 mV
Current Programming & Readback			
Minimum Current Iout	0 mA	_____	+ 238 mA
Measurement Readback	Iout – 102 mA	_____	Iout + 102 mA
High Current Iout	33.864 A	_____	34.136 A
Measurement Readback	Iout – 136 mA	_____	Iout + 136 mA
CC Load Effect	– 34 mA	_____	+ 34 mA
CC Source Effect	– 17 mA	_____	+ 17 mA

Test Description	N8760A Settings
Voltage Programming & Readback, Min Voltage	≤225 mV, 136 mA
Voltage Programming & Readback, High Voltage	150V, 136 mA
CV Load Effect, Source Effect, Ripple and Noise	150V, 34A
Transient Response	150V, from 3.4A to 30.6A
Current Programming & Readback, Min Current	136 mA, 150V
Current Programming & Readback, High Current	34A, 150V
CC Load Effect, Source Effect	34A, 150V

N8760A Load Requirements	
Current shunt	0.01Ω 100 A
Agilent N3300 Electronic load modules	11 – N3305A
Fixed Resistor for CV Ripple and Noise	4.4Ω 5.5 kW

Test Record – Agilent N8761A [300V, 17A, 5kW]

Agilent N8761A	Report No _____	Date _____	
Description	**Minimum Specs.**	**Results**	**Maximum Specs.**
Voltage Programming & Readback			
Minimum Voltage Vout	0 mV	_____	+ 825 mV
Measurement Readback	Vout – 375 mV	_____	Vout + 375 mV
High Voltage Vout	299.7 V	_____	300.3 V
Measurement Readback	Vout – 450 mV	_____	Vout + 450 mV
CV Load Effect	– 50 mV	_____	+ 50 mV
CV Source Effect	– 30 mV	_____	+ 30 mV
CV Ripple and Noise			
peak-to-peak	N/A	_____	300 mV
rms	N/A	_____	60 mV
Transient Response			
Voltage @ 2 ms	– 1.5V	_____	+ 1.5V
Current Programming & Readback			
Minimum Current Iout	0 mA	_____	+ 119 mA
Measurement Readback	Iout – 51 mA	_____	Iout + 51 mA
High Current Iout	16.932 A	_____	17.068 A
Measurement Readback	Iout – 68 mA	_____	Iout + 68 mA
CC Load Effect	– 17 mA	_____	+ 17 mA
CC Source Effect	– 8.5 mA	_____	+ 8.5 mA

Test Description	N8761A Settings
Voltage Programming & Readback, Min Voltage	≤450 mV, 68 mA
Voltage Programming & Readback, High Voltage	300V, 68 mA
CV Load Effect, Source Effect, Ripple and Noise	300V, 17A
Transient Response	200V, from 1.7A to 15.3A
Current Programming & Readback, Min Current	68 mA, 300V
Current Programming & Readback, High Current	17A, 300V
CC Load Effect, Source Effect	17A, 300V

N8761A Load Requirements	
Current shunt	0.1Ω 15 A
Use fixed resistor instead of load modules	17.6Ω 5.5 kW (or Amrel 5KW 600V 300A electronic load)
Fixed Resistor for CV Ripple and Noise	17.6Ω 5.5 kW

Test Record – Agilent N8762A [600V, 8.5A, 5kW]

Agilent N8762A	Report No _____	Date _____	
Description	**Minimum Specs.**	**Results**	**Maximum Specs.**
Voltage Programming & Readback			
Minimum Voltage Vout	0 mV	_____	+ 1.65 V
Measurement Readback	Vout – 750 mV	_____	Vout + 750 mV
High Voltage Vout	599.4 V	_____	600.6 V
Measurement Readback	Vout – 900 mV	_____	Vout + 900 mV
CV Load Effect	– 95 mV	_____	+ 95 mV
CV Source Effect	– 60 mV	_____	+ 60 mV
CV Ripple and Noise			
peak-to-peak	N/A	_____	500 mV
rms	N/A	_____	120 mV
Transient Response			
Voltage @ 2 ms	– 3V	_____	+ 3V
Current Programming & Readback			
Minimum Current Iout	0 mA	_____	+ 59.5 mA
Measurement Readback	Iout – 25.5 mA	_____	Iout + 25.5 mA
High Current Iout	8.466 A	_____	8.534 A
Measurement Readback	Iout – 34 mA	_____	Iout + 34 mA
CC Load Effect	– 8.5 mA	_____	+ 8.5 mA
CC Source Effect	– 4.3 mA	_____	+ 4.3 mA

Test Description	N8762A Settings
Voltage Programming & Readback, Min Voltage	≤0.9V, 34 mA
Voltage Programming & Readback, High Voltage	600V, 34 mA
CV Load Effect, Source Effect, Ripple and Noise	600V, 8.5A
Transient Response	200V, from 0.85A to 7.65A
Current Programming & Readback, Min Current	34 mA, 600V
Current Programming & Readback, High Current	8.5A, 600V
CC Load Effect, Source Effect	8.5A, 600V

N8762A Load Requirements	
Current shunt	0.1Ω 15 A
Use fixed resistor instead of load modules	70.6Ω 5.5 kW (or Amrel 5KW 600V 300A electronic load)
Fixed Resistor for CV Ripple and Noise	70.6Ω 5.5 kW

Calibration

Refer to the “Equipment Required” section in this appendix for a list of the equipment required for calibration. A general outline of the procedure is as follows:

- As shipped from the factory the calibration password is 0, which means password protection is removed and the ability to enter calibration mode is unrestricted. If a password has subsequently been set, you must enter the correct password - otherwise an error will occur. Once calibration has been entered, the password can be changed by the user.
- You do not have to do a complete calibration. If appropriate, you may calibrate only the voltage or current functions and then save the calibration constants. You can also save the date when the calibration was preformed (see CAL:DATE <”date”>).
- As each calibration sequence is completed, the instrument saves the calibration constants and begins using them.
- Exit the calibration mode. Note that a Reset command (*RST) also sets the calibration state to OFF.

Calibration Procedure

Unless instructed otherwise, connect the +sense terminal to the +output, and the -sense terminal to the -output.

When calibrating the unit using SCPI commands, most calibration steps involve sending an *OPC? query to synchronize with the power supply’s command completion before proceeding. The response from the instrument must be read each time *OPC? is given.

NOTE The CAL:LEV and CAL:DATA commands may take several seconds to complete. If a timeout occurs in your VISA application, you may need to change the VI_ATTR_TMO_VALUE in the ViSetAttribute function.

Voltage Programming and Measurement Calibration

Step 1. Connect the Agilent 3458A voltage input to the output.

Step 2. Enable voltage calibration mode.

```
*RST
OUTP ON
CAL:STAT ON
```

Step 3. Set the current limit high enough to allow unrestricted voltage programming.

```
ISET 0.5
```

Step 4. Select voltage calibration.

```
CAL:VOLT
```

Step 5. Select the first voltage calibration point.

```
CAL:LEV P1
*OPC?
```

Step 6. Measure the output voltage and enter the data.

```
CAL:DATA <data>
```

Step 7. Select the second voltage calibration point.

```
CAL:LEV P2
*OPC?
```

Step 8. Measure the output voltage and enter the data.

```
CAL:DATA <data>
```

Step 9. Exit calibration mode.

```
CAL:STAT OFF
```

Current Programming and Measurement Calibration

Step 1. Connect a precision shunt resistor to an output. Connect the Agilent 3458A across the shunt. The shunt should be able to measure at least 120% of the power supply's rated full-scale current.

Step 2. Enable current calibration mode.

```
*RST
OUTP ON
CAL:STAT ON
```

Step 3. Set the output voltage high enough to compensate for any voltage drops on the load leads and current shunt.

```
VSET 0.5
```

Step 4. Select current calibration.

```
CAL:CURR
```

Step 5. Select the first current calibration point.

```
CAL:LEV P1
*OPC?
```

Step 6. Calculate the shunt current (I=V/R) and enter the data.

```
CAL:DATA <data>
```

Step 7. Select the second current calibration point.

```
CAL:LEV P2
*OPC?
```

Step 8. Calculate the shunt current (I=V/R) and enter the data.

```
CAL:DATA <data>
```

Step 9. Exit calibration mode.

```
CAL:STAT OFF
```



Appendix C
Service

Types of Service Available 128
Repackaging for Shipment 128
Operating Checklist 128
Error Messages 130
Recycling Plastic Components 134

This chapter discusses the procedures involved for returning a failed instrument to Agilent Technologies for service or repair. A procedure is included for diagnosing specific symptoms.

Types of Service Available

If your instrument fails during the warranty period, Agilent Technologies will replace or repair it free of charge. After your warranty expires, Agilent Technologies will replace or repair it at a competitive price.

Contact your nearest Agilent Technologies Service Center. They will arrange to have your instrument repaired or replaced.

Repackaging for Shipment

If the unit is to be shipped to Agilent Technologies for service or repair, be sure to:

- Attach a tag to the unit identifying the owner and indicating the required service or repair. Include the model number and full serial number.
- Place the unit in its original container with appropriate packaging material for shipping.
- Secure the container with strong tape or metal bands.

If the original shipping container is not available, place your unit in a container that will ensure at least 4 inches of compressible packaging material around all sides for the instrument. Use static-free packaging materials to avoid additional damage to your unit.

Agilent Technologies suggests that you always insure shipments.

Operating Checklist

If the power supply appears to be operating improperly, use the following procedures to determine whether the power supply, load, or external circuits are the cause.

Turn-on check out procedure

Turn off the unit and remove all external connections to the instrument. Follow the turn-on checkout procedure in chapter 2.

Trouble-shooting guide

If you have encountered problems during the checkout procedure, use the following guide to diagnose a specific symptom. If the action does not remedy the problem, return the unit for service.

Symptom	Check	Action
No output. All displays and indicators are blank.	Is the AC power cord defective?	Check continuity. Replace if necessary.
	Is the AC input voltage within range?	Check AC input voltage. Connect to appropriate voltage source.
Output is present momentarily, but shuts off quickly. Display indicates AC.	Does the AC source voltage sag when a load is applied?	Check AC input voltage. Connect to appropriate voltage source.
Output is present momentarily, but shuts off quickly. Display indicates OUP.	Is the power supply configured for remote sensing?	Check if the positive or negative load wire is loose.
Output voltage will not adjust. Front panel CC LED is on.	Is the power supply in constant current mode?	Check the current limit setting and load current.
Output voltage will not adjust. Front panel CV LED is on.	Is the output voltage being adjusted above the OVP setting or below the UVL setting?	Set the OVP or UVL so that they will not limit the output.
Output current will not adjust. Front panel CV LED is on.	Is the unit in constant voltage mode?	Check the current limit and voltage setting.
Large ripple present in output.	Is the power supply in remote sense?	Check load and sense wires connection for noise and impedance effects.
	Is the voltage drop on the load wire high?	Minimize the drop on the load wires.
No output. Display indicates OUP.	Over-voltage circuit has tripped.	Turn off the POWER switch. Check load connections. If analog programming is used, check if the OVP is set lower than the output.
No output. Front panel PROT indicator is blinking.	Display indicates EПA?	Check connector J1 ENABLE connection. Also check SW1 switch setting.
	Display indicates SO?	Check connector J1 Output Shut-Off connection.
	Display indicates O7P?	Check if air intake or exhaust is blocked. Check if unit is installed next to heat-generating equipment.
	Display indicates OCP?	Check OCP setting and load current.
Poor load regulation. Front panel CV LED is on.	Are sense wires properly connected?	Connect sense wires according to instructions in chapter 2.
Front panel controls are nonfunctional.	Is the power supply in Local Lockout mode?	Turn off the POWER switch and wait until the display turns off. Turn on the POWER switch and press the REM/LOC button.

Error Messages

Displaying the SCPI error queue

The entire error queue is read, then emptied, using the following command: SYST:ERR?

Error List

The following table documents the various error messages that the power supply supports:

Error	**Device-dependent Errors** (these errors set Standard Event Status register bit #3)
0	**No error** This is the response to the ERR? query when there are no errors.
100	**Too many channels** You have specified more channels than are installed in the mainframe.
101	**Calibration state is off** Calibration is not enabled. The instrument will not accept calibration commands.
102	**Calibration password is incorrect** The calibration password is incorrect.
104	**Bad sequence of calibration commands** Calibration commands have not been entered in the proper sequence.
114	**CAL:DATE must be yyyy/mm/dd** The calibration date must be entered in the numeric format yyyy=year, mm=month, dd=date
203	**Compatibility function not implemented** The requested compatibility function is not available.
204	**NVRAM checksum error** A checksum error has occurred in the instrument's nonvolatile random access memory.
205	**NVRAM full** The nonvolatile random access memory of the instrument is full.
206	**File not found** The internal calibration file or the internal channel attribute file was not found in NVRAM.
209	**Output communications failure** A hardware failure has occurred on the power supply.
302	**Option not installed** The option that is programmed by this command is not installed.
351	**VOLT setting conflicts with VOLT:PROT setting** Attempted to program the voltage above the over-voltage protection setting.
352	**VOLT:PROT setting conflicts with VOLT setting** Attempted to set the over-voltage protection below the voltage setting.
353	**VOLT setting conflicts with VOLT:LIM:LOW setting** Attempted to program the voltage below the under-voltage limit setting.
354	**VOLT:LIM:LOW setting conflicts with VOLT setting** Attempted to set the under-voltage limit above the voltage setting

	Command Errors (these errors set Standard Event Status register bit #5)
–100	**Command error** Generic syntax error.
–101	**Invalid character** An invalid character was found in the command string.
–102	**Syntax error** Invalid syntax was found in the command string. Check for blank spaces.
–103	**Invalid separator** An invalid separator was found in the command string. Check for proper use of , ; :
–104	**Data type error** A different data type than the one allowed was found in the command string.
–105	**GET not allowed** A group execute trigger is not allowed in a command string.
–108	**Parameter not allowed** More parameters were received than were expected.
–109	**Missing parameter** Fewer parameters were received than were expected.
–110	**Command header error** An error was detected in the header.
–111	**Header separator error** A character that was not a valid header separator was found in the command string.
–112	**Program mnemonic too long** The header contains more than 12 characters.
–113	**Undefined header** A command was received that was not valid for this instrument.
–114	**Header suffix out of range** The value of the numeric suffix is not valid.
–120	**Numeric data error** Generic numeric data error.
–121	**Invalid character in number** An invalid character for the data type was found in the command string.
–123	**Exponent too large** The magnitude of the exponent was larger than 32000.
–124	**Too many digits** The mantissa of a numeric parameter contained more than 255 digits, excluding leading zeros.
–128	**Numeric data not allowed** A numeric parameter was received but a character string was expected.
–130	**Suffix error** Generic suffix error
–131	**Invalid suffix** A suffix was incorrectly specified for a numeric parameter.
–134	**Suffix too long** The suffix contains more than 12 characters.
–138	**Suffix not allowed** A suffix is not supported for this command.
–140	**Character data error** Generic character data error

	Command Errors (continued)
–141	**Invalid character data** Either the character data element contains an invalid character, or the element is not valid.
–144	**Character data too long** The character data element contains more than 12 characters.
–148	**Character data not allowed** A discrete parameter was received, but a string or numeric parameter was expected.
–150	**String data error** Generic string data error
–151	**Invalid string data** An invalid character string was received. Check that the string is enclosed in quotation marks.
–158	**String data not allowed** A character string was received, but is not allowed for this command.
–160	**Block data error** Generic block data error
–161	**Invalid block data** The number of data bytes sent does not match the number of bytes specified in the header.
–168	**Block data not allowed** Data was sent in arbitrary block format but is not allowed for this command.
–170	**Expression error** Generic expression error
–171	**Invalid expression data** The expression data element was invalid.
–178	**Expression data not allowed** Expression data element was sent but is not allowed for this command.

	Execution Errors (these errors set Standard Event Status register bit #4)
–200	**Execution error** Generic syntax error
–220	**Parameter error** A data element related error occurred.
–221	**Settings conflict** A data element could not be executed because of the present instrument state.
–222	**Data out of range** A data element could not be executed because the value was outside the valid range.
–223	**Too much data** A data element was received that contains more data than the instrument can handle.
–224	**Illegal parameter value** An exact value was expected but not received.
–225	**Out of memory** The device has insufficient memory to perform the requested operation.
–226	**Lists not same length** One or more lists are not the same length.
–230	**Data corrupt or stale** Possible invalid data. A new reading was started but not completed.

	Execution Errors (continued)
–231	**Data questionable** The measurement accuracy is suspect.
–232	**Invalid format** The data format or structure is inappropriate.
–233	**Invalid version** The version of the data format is incorrect to the instrument.
–240	**Hardware error** The command could not be executed because of a hardware problem with the instrument.
–241	**Hardware missing** The command could not be executed because of missing hardware, such as an option.
–260	**Expression error** An expression program data element related error occurred.
–261	**Math error in expression** An expression program data element could not be executed due to a math error.

	Query Errors (these errors set Standard Event Status register bit #2)
–400	**Query Error** Generic error query
–410	**Query INTERRUPTED** A condition causing an interrupted query error occurred.
–420	**Query UNTERMINATED** A condition causing an unterminated query error occurred.
–430	**Query DEADLOCKED** A condition causing a deadlocked query error occurred.
–440	**Query UNTERMINATED after indefinite response** A query was received in the same program message after a query indicating an indefinite response was executed.

Recycling Plastic Components

The following table identifies the plastic components in your instrument that must be recycled when the instrument is disposed of.

Description, Qty, Material	Image	Description, Qty, Material	Image
Front panel – slotted (qty 1) CYCOLOY C6200		Fan pcb insulator – clear (qty 1) LEXAN FR60	
Voltage/current knobs (qty 2) CYCOLOY C6200		Airflow deflector – clear (qty 1) LEXAN FR60	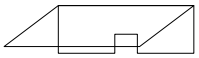
Pushbuttons (qty 6) CYCOLOY C6200		FET dust shield - clear (qty 2) LEXAN FR60	
Nameplate (qty 1) 8B35V		FET/diode insulator – pink, assorted sizes (qty varies) TC-30-CG	
Controls label (qty 1) 8010VC		Bus bar spacers – red, black (qty 2) VALOX 310 SEO	
Foot (qty 4) AR 790		Fan push-rivet – black (qty 12) NYLON 6	
Analog connector cover (qty 2) LEXAN 243R		PCB standoff – white (qty 5) NYLON 6/6	
Line cord strain relief (qty 1) Polyamide PA			
Display insulator – clear (qty 1) LEXAN FR60	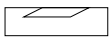		
Cover insulator – clear (qty 1) LEXAN FR60	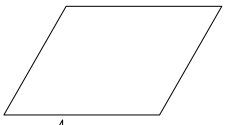		
Chassis insulator – clear (qty 1) LEXAN FR60	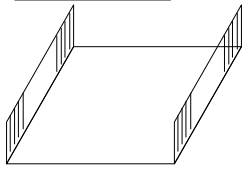		

Appendix D
Compatibility

Differences – In General 136
Compatibility Command Summary 137

The Agilent N8700 power supplies are programmatically compatible with the Agilent 603xA power supplies. This means that you can remotely program the Agilent N8700 power supplies using the same commands that are used to program the 603xA power supplies.

CAUTION Do not mix Compatibility with SCPI commands in the same program. This will result in unpredictable instrument behavior.

Differences – In General

The following table documents the general differences between the way Compatibility commands work on the Agilent N8700 power supplies and the way they worked on the Agilent 603xA power supplies.

Item	Differences
Queries	The Agilent N8700 will respond to multiple queries. It will not allow a space separator between numbers. It will not allow a user to query information, read back only a portion of the information, send another command, and finish reading back the information from the original query. Sending a second query without reading the response to the first will generate an error. Model number queries will only return the N8700 model numbers.
Status functions	Serial Poll will be controlled by the SCPI status model and will not act like a 603xA power supply. SRQ will be controlled by the SCPI status model. Parallel poll will not work.
Settings	The full-scale limits will match the Agilent N8700 limits.
Measurement	Floating point numbers returned by the instrument may not have exactly the same syntax or number of digits.
Calibration	Calibration must be done in SCPI.
Storage states	The Agilent N8700 units have 16 volatile states.

Compatibility Command Summary

The following table documents the compatibility commands that the Agilent N8700 power supplies support. All compatibility commands are accepted; however, some commands do nothing.

Compatibility Command	Description	Similar SCPI Command
ASTS?	Queries the accumulated status (ASTS). The response represents the sum of the binary weights of the ASTS register bits. The ASTS register is set to the present status after being queried.	STAT:OPER:EVEN? STAT:QUES:EVEN? *ESE?
CLR	Returns the power supply to the power-on state. Same as *RST.	*RST
DLY <delay>	Generates error 203.	
DLY?	Generates error 203.	
ERR?	Queries the present programming or hardware error. An error code number is returned over the GPIB to identify the error. The error register is cleared after being read.	SYST:ERR?
FAULT?	Queries the fault register. A bit is set in the fault register when the corresponding bit in both the status and the mask registers. The response is an integer 0 to 255. The fault register is cleared after being read.	STAT:OPER? STAT:QUES? *ESE?
FOLD	Turns the OCP on or off. This is only allowed for constant current mode (FOLD 2). Constant voltage mode (FOLD1) generates error 203.	CURR:PROT:STAT
FOLD?	Queries the OCP setting. The response is FOLD 2.	CURR:PROT:STAT?
HOLD	When turned on (HOLD 1), causes the VSET, ISET, FOLD, and UNMASK values to be held until a trigger occurs. This only applies to the compatibility functions, not the SCPI functions	VOLT:TRIG CURR:TRIG
HOLD?	Queries the hold setting. The response is HOLD 1.	
ID?	Queries the identification (model number) of the power supply.	*IDN?
IMAX	Sets a soft programming limit for current. Attempting to program the current above this setting will generate an error.	
IMAX?	Queries the IMAX setting. The response is a real number.	
IOUT?	Queries the measured output current. The response is a real number.	MEAS:CURR?
ISET <current>	Sets the output current.	CURR
ISET?	Queries the present current setting. The response is a real number.	CURR?
OUT <on|off>	Turns the output on or off. On/off equals 1 turns the output on; equals 0 turns the output off.	OUTP:STAT
OUT?	Queries whether the output is turned on or off . The response is OUT 1 (on) *or* OUT 0 (off). The front panel displays OFF when the output is off.	OUTP:STAT?

Compatibility Command	Description	Similar SCPI Command
OVP	Sets the over-voltage trip point.	VOLT:PROT:LEV
OVP?	Queries the present over-voltage setting. The response is a real number.	VOLT:PROT:LEV?
RCL <reg>	Recalls the saved settings. There are up to 16 store/recall states. Saved settings must have been previously stored using the STO command.	*RCL
ROM?	Queries the revision date of the power supply's firmware.	*IDN?
RST	Resets any tripped protection.	OUTP:PROT:CLE
SRQ <setting>	Generates error 203. The service request capability of the power supply is only supported using the SCPI commands	*SRQ
SRQ?	Always returns 0.	*SRQ?
STO <reg>	Stores the present power supply settings in the specified register. There are up to 16 store/recall states.	*SAV
STS?	Queries the present status. The response represents the sum of the binary weights of the status register bits. The response is STS <n>	STAT:OPER:COND? STAT:QUES:COND?
TEST?	Always returns 0.	*TST?
TRG	Causes the settings held with HOLD 1 to be executed.	
UNMASK <setting>	Sets the bits in the mask register to the setting. The setting is an integer that represents the sum of the binary weights of the bits. The mask register operates in conjunction with the status and fault registers.	STAT:OPER:NTR STAT:OPER:PTR STAT:QUES:NTR STAT:QUES:PTR
UNMASK?	Queries the present setting of the mask register. The response is UNMASK <n>.	STAT:OPER:NTR? STAT:OPER:PTR? STAT:QUES:NTR? STAT:QUES:PTR?
VMAX	Sets the soft programming limit for voltage. Attempting to program the voltage above this setting will generate an error.	
VMAX?	Queries the VMAX setting. The response is VMAX <n>.	
VOUT?	Queries the measured output voltage. The response is a real number.	MEAS:VOLT?
VSET <voltage>	Sets the output voltage.	VOLT
VSET?	Queries the present voltage setting. The response is a real number.	VOLT?

Index

4

488 ..... 11, 50

A

ABOR 81
AC input
  connections 20
AC INPUT 12, 93
accessories 16
analog programming
  external resistance 47
  external voltage 46
  terminals 45
AUT 10
auto-restart 42

C

calibration 124
  current programming and measurement 125
  equipment 96
  procedure 124
  voltage programming and measurement 124
calibration commands 68
  CAL CURR 68
  CAL DATA 68
  CAL DATE 68
  CAL LEV 68
  CAL PASS 68
  CAL STAT 69
  CAL VOLT 69
caution 3
combining commands
  common commands 62
  from different subsystems 61
  root specifier 61
command
  completion 64
  synchronization 64
common commands 65
  *CLS 76
  *ESE 77
  *ESR? 77
  *IDN? 80
  *OPC 77
  *OPT? 80
  *RCL 80
  *RST 80
  *SAV 80
  *SRE 78
  *STB? 78
  *TST 80
  *WAI 78
  TRG 81
common mode current 29
compatibility
  command summary 137
  differences 136
connections
  6V to 60V models 23
  80V to 600V models 24
  analog 14
  J134
  J226
  multiple load 28
  parallel 30
  sense 13
  series 32
  series diode 32
constant current (CC)
  CC 10
  check 37
  load effect 101
  mode 38
  source effect 102
constant voltage (CV)
  CV 10
  load effect 98
  mode 38
  noise 99
  source effect 99
control socket 55
CURRENT 10
current monitoring, external 48
current programming accuracy 101
current readback accuracy 101
current shunt 97
CV/CC crossover 39
CV/CC signal 39

D

daisy-chain shut down 44
damage 16
data socket 55
DC AMPS 10
DC VOLTS 10
Default Gateway 57
device clear 64
DNS 57
Domain 57

E

electronic load 97
enable/disable terminals 43
environmental conditions 17, 92
ERR 78
error messages 130
ESB 78

F

features 8
FINE 11
front panel locking 41
functions 9

G

GPIB address 50
GPIB interface 50
grounding 17, 29

H

history 2
Hostname 57

I

impedance effects 29
inductive loads 29
initiate commands
  INIT 81
  INIT CONT 81
inspection 16
IO 50
IP Address 56
items supplied 16

J

J1 connector 12
J2 connector 12

K

Keepalive 57
keywords 61

L

LAN 11
LAN interface 51
  setup utility 58
  sockets 55
  Telnet 55, 58
LAN, private 53
LAN, site 52
last setting memory 42
LFP 11
LIMIT 11
load wiring 22
local voltage sensing 26
lock front panel 41

M

magnetic fields 17
master unit 31
MAV 78
measure commands 69
  MEAS CURR? 69
  MEAS VOLT? 69
message terminator 62
  end or identify 62
  newline 62
model numbers 16
model ratings 9
MSS 78
multiple load connections 28
multipliers 63

N

numerical data formats 63

O

OCP 11
OPER 78
operating checklist 128
optional commands 60

OUP 11
OUT ON 10
outline diagram 17
output commands 70
  OUTP 70
  OUTP PON STAT 70
  OUTP PROT CLE 70
output grounding 29
output noise 29
output on/off control 42
output programming example 84
over-current check 37
over-current protection 32, 40
over-temperature protection 41
over-voltage check 36
over-voltage protection 32, 39
OVP 11

P

POWER 11
power cord, connecting 19
power receptacle 17
power supply OK signal 44
power-fail protection 41
print date 2
PROT 11
protection functions 39

Q

queries 62
QUES 78

R

rack mounting 18
recycling
  plastic componenets 134
remote voltage sensing 27
repackaging 128
repacking 16
response data types 63
RQS 78

S

SAF 10
safe-start 42
safety 3, 17
SCPI
  command completion 64
  command path 60
  commands 66
  device clear 64
  message unit 61
  multiple commands 60
  syntax 60
shut off terminals 42
slave unit 31
sockets 55
source commands 71
  [SOUR] CURR [IMM] 71
  [SOUR] CURR PROT STAT 71
  [SOUR] CURR TRIG 71
  [SOUR] VOLT [IMM] 71
  [SOUR] VOLT LIM LOW 72
  [SOUR] VOLT PROT LEV 72
  [SOUR] VOLT TRIG 71
specifications
  characteristics 91
  performance 90
status commands 73
  STAT OPER COND? 74
  STAT OPER ENAB 74
  STAT OPER NTR 75
  STAT OPER PTR 75
  STAT OPER? 74
  STAT PRES 74
  STAT QUES COND? 75
  STAT QUES ENAB 76
  STAT QUES NTR 76
  STAT QUES PTR 76
  STAT QUES? 75
Subnet Mask 57
subsystem commands 65
suffixes 63
support rails 18
SW1 switch 12, 13
system commands 79
  SYST COMM RLST 79
  SYST COMM TCP CONT 79
  SYST ERR? 79
  SYST VERS? 79

T

Telnet 55, 58
transient recovery time 100
trigger commands 81
  TRIG 81
  TRIG SOUR 81

trigger programming example 86
turn-on check out 36

U

UFP 11
under-voltage check 37
under-voltage limit 40
USB ID string 51
USB interface 51
UUL 11
UVL 11

V

verification 95
verification equipment 96
VOLTAGE 10
voltage monitoring, external 48
voltage programming accuracy 98
voltage readback accuracy 98
voltage sensing 26

W

warning 3
Web server 54
web URL's 4
wire sizes 22