61801-2Z

Dimensions

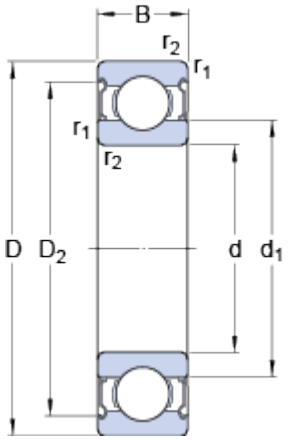

d		12	mm
D		21	mm
B		5	mm
d_1	≈	14.8	mm
D_2	≈	19.15	mm
$r_{1,2}$	min.	0.3	mm

Abutment dimensions

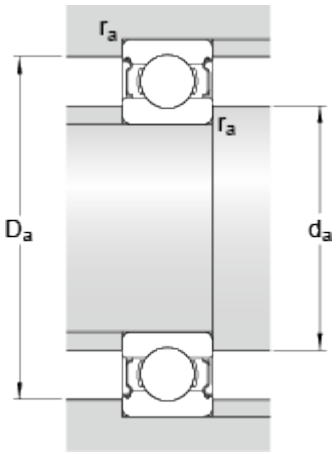

d_a	min.	14	mm
d_a	max.	14.7	mm
D_a	max.	19	mm
r_a	max.	0.3	mm

Calculation data

Basic dynamic load rating	C	1.7	kN
Basic static load rating	C_0	0.915	kN
Fatigue load limit	P_u	0.039	kN
Reference speed		70000	r/min
Limiting speed		36000	r/min
Calculation factor	k_r	0.015	
Calculation factor	f_0	13.4	

Mass

Mass bearing	0.0063	kg