efector160

LK1023

LK0472B-B-00KQPKG/US

Level sensors

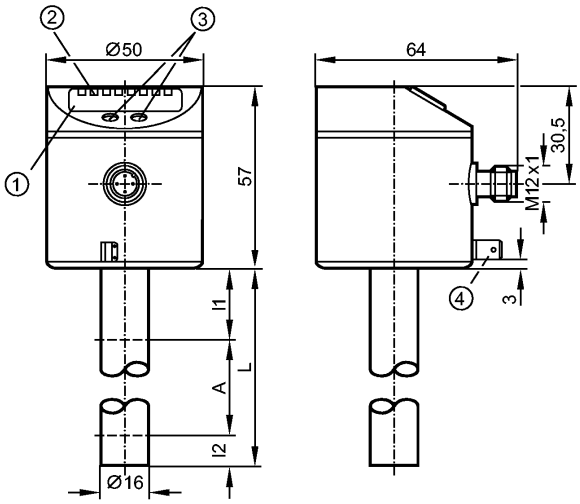

1: 4-digit alphanumeric display
2: LEDs
3: Programming buttons
4: Housing connection (flat-pin connector 6.3 mm following DIN 46244)

Made in Germany

Product characteristics		
Electronic level sensor		
Connector		
Probe length: L = 472 mm		
2 switching outputs		
4-digit alphanumeric display		
Application		
Application		Hydrous coolants, oils, water, media similar to water
Cannot be used for:		extremely conductive and adhering media, granulates and bulk materials, acids and alkalis, food and electroplating applications
Dielectric constant medium		> 2
Medium temperature oil		
- Continuous	[°C]	0...70
- Short time	[°C]	0...90
Medium temperature water and hydrous media	[°C]	0...35 (LK1023 + E43101: 0...60) **)
Medium temperature coolant emulsions	[°C]	0...35 (LK1023 + E43101: 0...60) **)
Maximum speed of the change of level	[mm/s]	200
Electrical data		
Electrical design		DC PNP
Operating voltage	[V]	18...30 DC
Current consumption	[mA]	< 60
Protection class		III
Reverse polarity protection		yes
Outputs		
Output		2 switching outputs
Output function		2 x normally open / closed programmable

LK1023

LK0472B-B-00KQPKG/US

Level sensors

Current rating	[mA]	200
Voltage drop	[V]	< 2.5
Short-circuit protection		thermal, pulsed
Overload protection		yes
Measuring / setting range		
Probe length L	[mm]	472
Active range A	[mm]	390
Inactive range I1 / I2	[mm]	53 / 30
Setting range		
Set point, SP	[mm]	40...395
Reset point, rP	[mm]	35...390
in steps of	[mm]	5
Hysteresis	[mm]	5
Overflow protection OP	[mm]	139 - 163 - 188 - 212 - 236 - 261 - 285 - 310 - 334 - 358 - 383 - 407
Hysteresis OP	[mm]	3
Accuracy / deviations		
Deviations (% of value of measuring range)		
Switch point accuracy		± 5
Repeatability		± 2
Reaction times		
Power-on delay time	[s]	3
Software / programming		
Programming options		hysteresis / window function; N.O. / N.C; position of SP/rP; position of OP; OP adjustment; medium adjustment; offset; display unit
Environment		
Ambient temperature	[°C]	0...60
Storage temperature	[°C]	-25...80
Maximum vessel pressure	[bar]	0.5 (when mounted with mounting accessories E43001 - E43007)
Protection		IP 67
Tests / approvals		
EMC		EN 61000-4-2 ESD: 4 kV CD / 8 kV AD EN 61000-4-3 HF radiated: 10 V/m EN 61000-4-4 Burst: 2 kV EN 61000-4-6 HF conducted: 10 V
Shock resistance		DIN EN 60068-2-29: 15 g (11 ms)
Vibration resistance		DIN EN 60068-2-6 5 g (10...2000 Hz)
MTTF	[Years]	228
Mechanical data		
Materials (wetted parts)		PP
Housing materials		stainless steel (304S15); FKM; NBR; PBT; PC; PEI; PP; TPE / V
Weight	[kg]	0.405
Displays / operating elements		
Display		Display unit / status 2 x LED green Switching status 2 x LED yellow Measured values 4-digit alphanumeric display Programming 4-digit alphanumeric display

efector160

LK1023

LK0472B-B-00KQPKG/US

Level sensors

Electrical connection

Connection	M12 connector (according to EN 61076-2-101); Gold-plated contacts

Wiring

Programming of the output function:
Hno = hysteresis / normally open
Hnc = hysteresis / normally closed
Fno = window function / normally open
Fnc = window function / normally closed



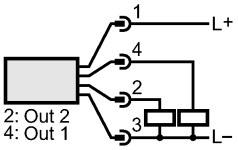

Remarks

Remarks	cULus - Class 2 source required **) for water and hydrous media with temperatures > 35 °C install the unit into a climatic tube (order no. E43101)
Pack quantity [piece]	1