SNL 526 + 22226 K + H 3126

SE and SNL plummer block housings for bearings on an adapter sleeve, with standard seals

Technical specification

APPROPRIATE PRODUCTS

Bearing (basic designation)	22226 K
Adapter sleeve	H 3126
Locating ring	2 x FRB 13/230

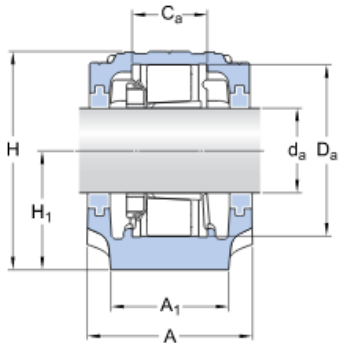

DIMENSIONS

d_a	115 mm
C_a	90 mm
D_a	230 mm
D_b	167.5 mm
A	190 mm
A_1	130 mm
H	290 mm
H_1	150 mm
H_2	50 mm
J	380 mm
L	445 mm
N	35 mm
N_1	28 mm

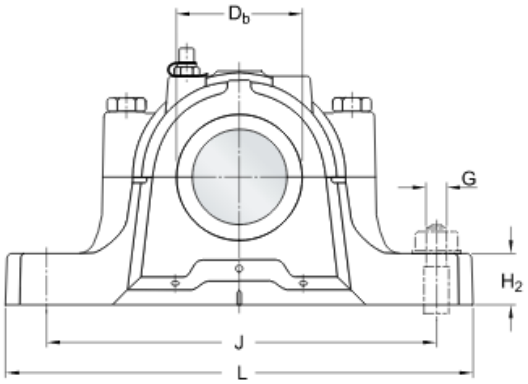

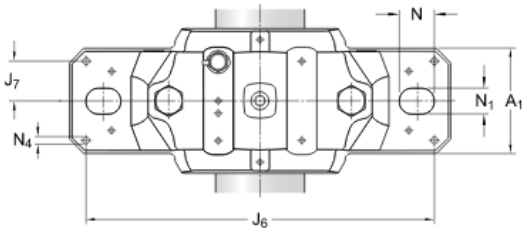

DOWEL PINS

J_6	414 mm
J_7	46 mm
N_4	max. 12 mm

SEAL DIMENSIONS

A_{2L}	208 mm
A_{2T}	265 mm
d_2	212 mm

APPROPRIATE SEALS AND END COVER

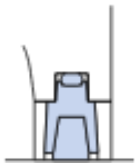

TSN 526 C

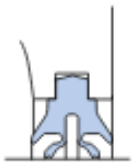

TSN 526 L

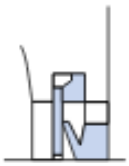

TSN 526 A

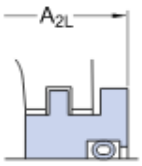

2 x TSN 526 S

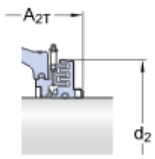

2 x TK 526



ASNH 526

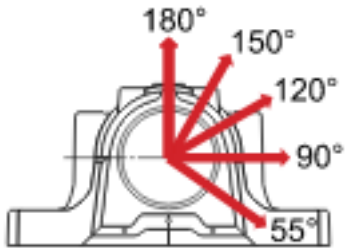

BREAKING LOADS, HOUSING

$P_{0°}$	900 kN
$P_{55°}$	900 kN
$P_{90°}$	540 kN
$P_{120°}$	410 kN
$P_{150°}$	360 kN
$P_{180°}$	450 kN
P_a	295 kN

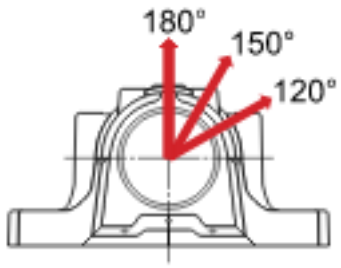

YIELD POINT, CAP BOLTS

$Q_{120°}$	900 kN
$Q_{150°}$	520 kN
$Q_{180°}$	450 kN

MASS

Mass housing	33 kg

MOUNTING INFORMATION

Cap bolt, size		M 24x130
Cap bolt, rec. tightening torque		350 N·m
Appropriate attachment bolt, size	G	24 mm
Appropriate attachment bolt, rec. tightening torque		665 N·m
Initial grease fill, 20%		700 g
Initial grease fill, 40%		1100 g

Eye bolt, size	M 10

Terms and conditions

By accessing and using this website / app of SKF Group, meaning AB SKF and / or any of its affiliates ("SKF"), you agree to the following terms and conditions:

Warranty Disclaimer and Limitation of Liability

Although every care has been taken to assure the accuracy of the information on this website / app, SKF provides this information "AS IS" and DISCLAIMS ALL WARRANTIES, EXPRESS OR IMPLIED, INCLUDING, BUT NOT LIMITED TO, IMPLIED WARRANTIES OF MERCHANTABILITY AND FITNESS FOR A PARTICULAR PURPOSE. You acknowledge that your use of this website / app is at your sole risk, that you assume full responsibility for all costs associated with use of this website / app, and that SKF shall not be liable for any direct, incidental, consequential, or indirect damages of any kind arising out of your access to, or use of the information or software made available on this website / app. Any warranties and representations in this website / app for SKF products or services that you purchase or use will be subject to the agreed upon terms and conditions in the contract for such product or service. Further, for non-SKF websites / apps that are referenced in our website / app or where a hyperlink appears, SKF makes no warranties concerning the accuracy or reliability of the information in these websites / apps and assumes no responsibility for material created or published by third parties contained therein. In addition, SKF does not warrant that this website / app or these other linked websites / apps are free from viruses or other harmful elements.

Copyright

Copyright in this website / app copyright of the information and software made available on this website / app rest with SKF or its licensors. All rights are reserved. All licensed material will reference the licensor that has granted SKF the right to use the material. The information and software made available on this website / app may not be reproduced, duplicated, copied, transferred, distributed, stored, modified, downloaded or otherwise exploited for any commercial use without the prior written approval of SKF. However, it may be reproduced, stored and downloaded for use by individuals without prior written approval of SKF. Under no circumstances may this information or software be supplied to third parties.
This website /app includes certain images used under license from Shutterstock, Inc.

Trademarks and Patents

All trademarks, brand names, and corporate logos displayed on the website / app are the property of SKF or its licensors, and may not be used in any way without prior written approval by SKF. All licensed trademarks published on this website / app reference the licensor that has granted SKF the right to use the trademark. Access to this website / app does not grant to the user any license under any patents owned by or licensed to SKF.

Changes

SKF reserves the right to make changes or additions to this website / app at any time.