O5E500

Through-beam sensor receiver

O5E-FPKG/US100

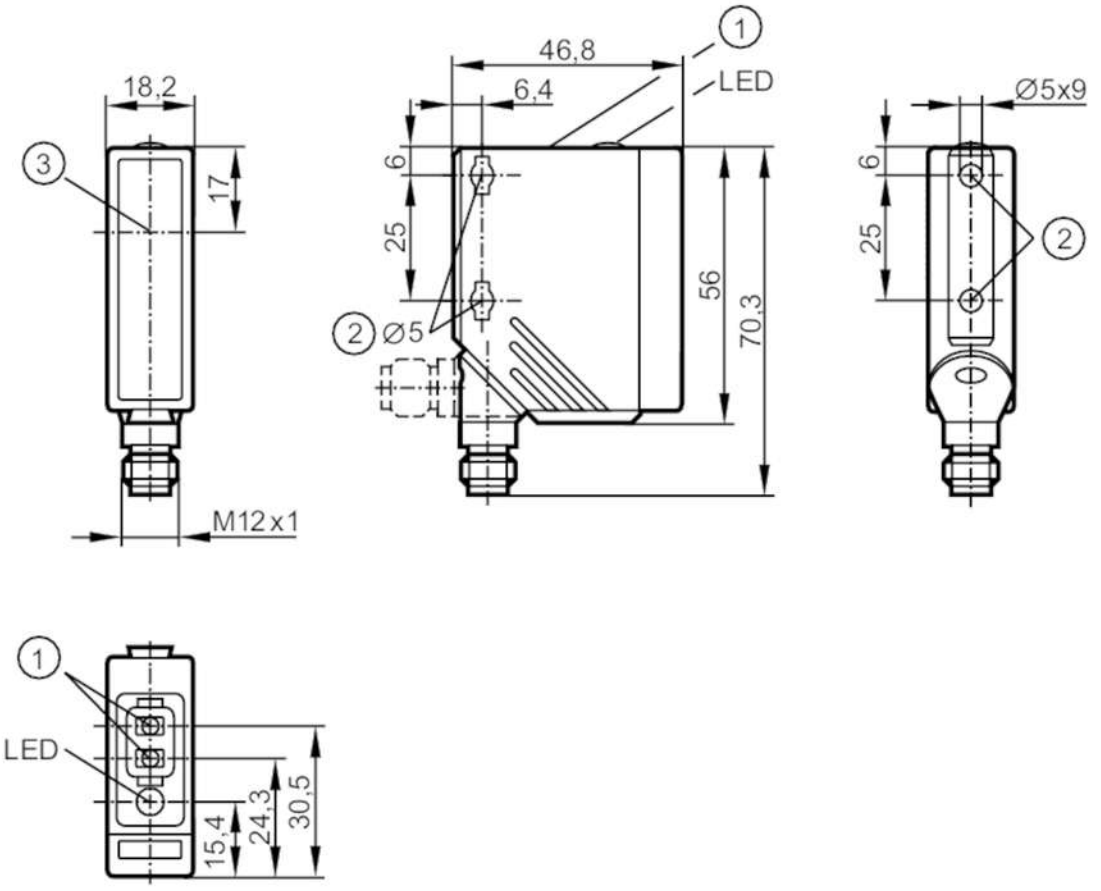

1 programming buttons
2 When a M5 mounting screw is used, the max. tightening torque is 2 Nm.
3 Light incidence

Product characteristics		
Type of light		red light
Housing		rectangular
Application		
Function principle		Through-beam sensor
Electrical data		
Operating voltage	[V]	10...36 DC
Current consumption	[mA]	11
Protection class		II
Reverse polarity protection		yes
Type of light		red light
Wave length	[nm]	624
Outputs		
Electrical design		PNP
Output function		light-on/dark-on mode; (programmable)
Max. voltage drop switching output DC	[V]	2.5

O5E500

Through-beam sensor receiver

O5E-FPKG/US100

Permanent current rating of switching output DC	[mA]	200	
Switching frequency DC	[Hz]	1000	
Short-circuit protection		yes	
Type of short-circuit protection		pulsed	
Overload protection		yes	
Detection zone			
Transmitter / receiver		receiver	
Range	[m]	< 25	
Range adjustable		yes	
Operating conditions			
Ambient temperature	[°C]	-25...60	
Protection		IP 67	
Tests / approvals			
EMC		EN 60947-5-2	
MTTF	[years]	801	
Mechanical data			
Weight	[g]	67.5	
Housing		rectangular	
Dimensions	[mm]	56 x 18.2 x 46.8	
Materials		housing: PA; bezel: stainless steel; operator interface: TPU	
Lens material		PMMA	
Lens alignment		side lens	
Displays / operating elements			
Display		switching status	1 x LED, yellow
Teach function		yes	
Electronic lock		yes	
Remarks			
Pack quantity		1 pcs.	
Electrical connection			

Connector: 1 x M12; coding: A



O5E500

Through-beam sensor receiver

O5E-FPKG/US100

Connection

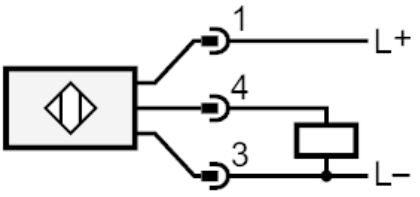

Diagrams and graphs

excess gain graph

