AIM & THURLBY THANDAR INSTRUMENTS

CPX400S & SA & SP

PowerFlex DC Power Supply

INSTRUCTION MANUAL

Aim-TTi

Table of Contents

Specification	2
Safety	5
Installation	6
Connections	7
Manual Operation	10
Remote Analogue Control (CPX400SA only)	15
Remote Interface Operation (CPX400SP only)	19
Remote Commands (CPX400SP only)	29
Maintenance	34

Note: The latest revisions of this manual, device drivers and software tools can be downloaded from: http://www.aimtti.com/support.

General specifications apply for the temperature range 5°C to 40°C. Accuracy specifications apply for the temperature range 18°C to 28°C after 1 hour warm-up with no load and calibration at 23°C. Typical specifications are determined by design and are not guaranteed.

OUTPUT SPECIFICATION

Voltage Range:	0V to 60V
Current Range:	0A to 20A

Note: In manual operation, actual maxima for voltage and current are typically 1% greater that the figures given above.

Power Range:	Up to 420W
Output Voltage Setting:	By coarse and fine controls.
Output Current Setting:	By single logarithmic control.
Operating Mode:	By single logarithmic control.
	Constant voltage (CV) or constant current (CC) with automatic cross-over, provided that the power demanded stays with the power envelope, see graph. Outside of this envelope the output becomes unregulated.

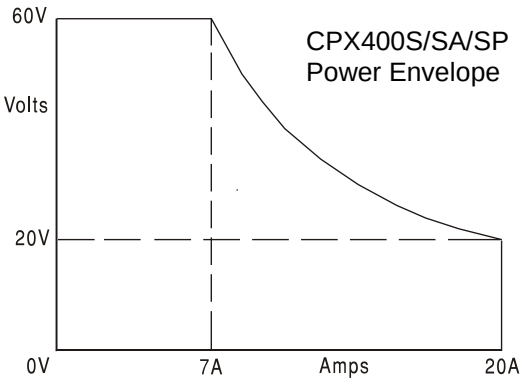

CPX400S/SA/SP
Power Envelope

Operating Ranges:	Four selectable ranges: 60V/20A, 60V/7A, 20V/20A and Custom Limits. Any V/I setting of the 60V/7A or 20V/20A ranges always falls within the appropriate part of the Power Envelope. The 60V/20A range permits any setting up to 60V and 20A but the output will become unregulated if operated outside of the Power Envelope, see above. The voltage and current limits of the Custom Limits range can be set to any V_{max} between 0.1V & 60V and I_{max} between 0.01A and 20A. This facility is most useful in limiting operation to a particular part of the Power Envelope.
Settings Lock: (S-Lock)	Voltage and current settings can be locked by a single button press. Lock accuracy is equal to meter accuracy (see Meter Specification)
Output Switch:	Electronic. Preset voltage and current displayed when off.
Output Terminals:	Front panel: Universal 4mm safety binding posts on 19mm (0·75”) pitch. Rear Panel: Barrier strip connections (CPX400SA/SP only)
Output Sensing:	Switchable between local and remote. Remote connection by spring-loaded push terminals on front panel and barrier strip on rear panel (CPX400SA /SP only).
Output Protection:	Forward protection by Over-Voltage Protection (OVP) and Over-Current Protection (OCP) trips. Reverse protection by diode clamp for reverse currents up to 3A.
OVP Range:	1V to 66V set by front panel screwdriver adjustment or via the remote interfaces (CPX400SP only). Setting resolution: 100mV. Response time: Typically 1ms. Maximum voltage that should be applied across the terminals is 70V.
OCP Range:	Measure-and-compare over-current protection is implemented in firmware and can only be set via the remote interface (CPX400SP only). Setting resolution: 10mA. Response time: typically 500ms. For CPX400S/SA, OCP is fixed at 22A.

Over-temperature Protection:	The output will be tripped off if a fault causes the internal temperature to rise excessively.
Line Regulation:	Change in output for a 10% line change: Constant voltage: <0.01% of maximum output Constant current: <0.01% of maximum output
Load Regulation:	Change in output for any load change within PowerFlex envelope, remote sense connected: Constant voltage: <0.01% of maximum output Constant current: <0.05% of maximum output
Ripple & Noise (20MHz bandwidth):	5mVrms max; typically <3mVrms, <15mV pk-pk, at maximum load, CV mode.
Transient Load Response:	<250us to within 50mV of set level for a 5% to 95% load change.
Voltage Programming Speed (CPX400SP only):	Maximum time required for output to settle within 1% of its total excursion (for resistive load). Excludes command processing time.

Range and Setting		*90% Load*	*No Load*		*90% Load*	*No Load*
60V 7A	Up	8ms	8ms	Down	80ms	1.5s
20V 20A	Up	8ms	8ms	Down	10ms	1.2s

Temperature Coefficient:	Typically <100ppm/°C
Status Indication:	Output ON lamp. Constant voltage mode lamp. Constant current mode lamp. Unregulated (power limit) lamp Remote lamp (CPX400SP only) LAN lamp (CPX400SP only) Trip message on display.

METER SPECIFICATIONS

Meter Types:	Dual 4 digit meters with 10mm (0.39") LEDs. Reading rate 4Hz.
Meter Resolutions:	10mV, 10mA
Meter Accuracies:	Voltage 0.1% of reading ± 2 digits Current 0.3% of reading ± 2 digits

ANALOGUE REMOTE CONTROL (CPX400SA only)

Isolated inputs and non-isolated outputs to set voltage and current limit.

Isolated control input scaling:	Rear panel control inputs (CV and CC) permit external 0V to 5V or 0 to10V signals (with respect to the common Return) to set 0 to 100% of rated output voltage and current. Inputs are protected against excess input voltages up to 60V. Isolation rating with respect to the output is 300V max.
Control input accuracy:	Voltage: 0.3% ±20mV. Input impedance 10kΩ. Current: 0.5% ±50mA. Input impedance 10kΩ.
Control output scaling:	Set values of 0 to 100% of rated output voltage and current generate 0 to 5V signals at the rear panel V_{out} and I_{out} outputs. Outputs are short-circuit protected. These signals are referenced to the output control circuit and will therefore be within ~1V of the positive output potential.

Control output accuracy:	Voltage: 0.3% ±20mV Current: 0.5% ±50mA. Output impedance: 125Ω.
Remote Off:	Rear panel connections allow a switch closure to turn output off. Remote Off is referenced to the output control circuit and will therefore be within ~1V of the positive output potential.

DIGITAL INTERFACES (CPX400SP only)

Full digital remote control facilities are available through the RS232, USB, LAN and GPIB (optional) interfaces.

Voltage Setting:	16-bit, Resolution 10mV, Accuracy ± (0·05% +10mV)
Current Setting:	16-bit, Resolution 1mA, Accuracy ± (0·3% + 0·005A)
RS232:	Standard 9-pin D-connector. Baud rate 9600.
GPIB (optional):	Conforming with IEEE488.1 and IEEE488.2
USB:	Standard USB 2.0 hardware connection. Operates as a virtual COM port.
LAN:	Ethernet 100/10base-T hardware connection. 1.4 LXI Core 2011.
Remote Command Processing Time:	Typically <25ms between receiving the command terminator for a step voltage change at the instrument and the output voltage beginning to change.

GENERAL

AC Input:	110V – 240V AC ± 10%, 50/60Hz. Installation Category II.
Power Consumption:	600VA max.
Operating Range:	+5ºC to +40ºC, 20% to 80% RH.
Storage Range:	–40ºC to + 70ºC.
Environmental:	Indoor use at altitudes up to 2000m, Pollution Degree 2.
Safety & EMC:	Complies with EN61010-1 & EN61326-1. For details, request the EU Declaration of Conformity for this instrument via http://www.aimtti.com/support (serial no. needed).
Size:	107mm x 130mm x 400mm (WxHxD) ¼-rack width x 3U height (optional rack mounting kit available).
Weight:	4.25kg

This power supply is a Safety Class I instrument according to IEC classification and has been designed to meet the requirements of EN61010-1 (Safety Requirements for Electrical Equipment for Measurement, Control and Laboratory Use). It is an Installation Category II instrument intended for operation from a normal single phase supply.

This instrument has been tested in accordance with EN61010-1 and has been supplied in a safe condition. This instruction manual contains some information and warnings which have to be followed by the user to ensure safe operation and to retain the instrument in a safe condition.

This instrument has been designed for indoor use in a Pollution Degree 2 environment in the temperature range 5°C to 40°C, 20% - 80% RH (non-condensing). It may occasionally be subjected to temperatures between +5°C and –10°C without degradation of its safety. Do not operate while condensation is present.

Use of this instrument in a manner not specified by these instructions may impair the safety protection provided. Do not operate the instrument outside its rated supply voltages or environmental range.

WARNING! THIS INSTRUMENT MUST BE EARTHED

Any interruption of the mains earth conductor inside or outside the instrument will make the instrument dangerous. Intentional interruption is prohibited. The protective action must not be negated by the use of an extension cord without a protective conductor.

When the instrument is connected to its supply, terminals may be live and opening the covers or removal of parts (except those to which access can be gained by hand) is likely to expose live parts. The apparatus shall be disconnected from all voltage sources before it is opened for any adjustment, replacement, maintenance or repair. Capacitors inside the power supply may still be charged even if the power supply has been disconnected from all voltage sources but will be safely discharged about 10 minutes after switching off power.

Any adjustment, maintenance and repair of the opened instrument under voltage shall be avoided as far as possible and, if inevitable, shall be carried out only by a skilled person who is aware of the hazard involved.

If the instrument is clearly defective, has been subject to mechanical damage, excessive moisture or chemical corrosion the safety protection may be impaired and the apparatus should be withdrawn from use and returned for checking and repair.

Make sure that only fuses with the required rated current and of the specified type are used for replacement. The use of makeshift fuses and the short-circuiting of fuse holders is prohibited.

Do not wet the instrument when cleaning it.

The following symbols are used on the instrument and in this manual:-



Caution - refer to the accompanying documentation, incorrect operation may damage the instrument.



Earth (ground) terminal.



mains supply OFF.

mains supply ON.



alternating current (ac)



direct current (dc)

Mains Operating Voltage

This instrument has a universal input range and will operate from a nominal 115V or 230V mains supply without adjustment. Check that the local supply meets the AC Input requirement given in the Specification.

Mains Lead

Connect the instrument to the AC supply using the mains lead provided. Should a mains plug be required for a different mains outlet socket, a suitably rated and approved mains lead set should be used which is fitted with the required wall plug and an IEC60320 C13 connector for the instrument end. To determine the minimum current rating of the lead-set for the intended AC supply, refer to the power rating information on the equipment or in the Specification.

WARNING! THIS INSTRUMENT MUST BE EARTHED.

Any interruption of the mains earth conductor inside or outside the instrument will make the instrument dangerous. Intentional interruption is prohibited.

Ventilation

The power supply is cooled by an intelligent multi-speed fan which vents at the rear. Take care not to restrict the air inlets at top, bottom and side panels or the exit at the rear. In rack-mounted situations allow adequate space around the instrument and/or use a fan tray for forced cooling.

Mounting

This instrument is suitable both for bench use and rack mounting. It is delivered with feet for bench mounting. The front feet include a tilt mechanism for optimal panel angle.

A rack kit for mounting one to four of these quarter-width 3U high units in a 19” rack is available from the Manufacturers or their overseas agents.

Front Panel Connections

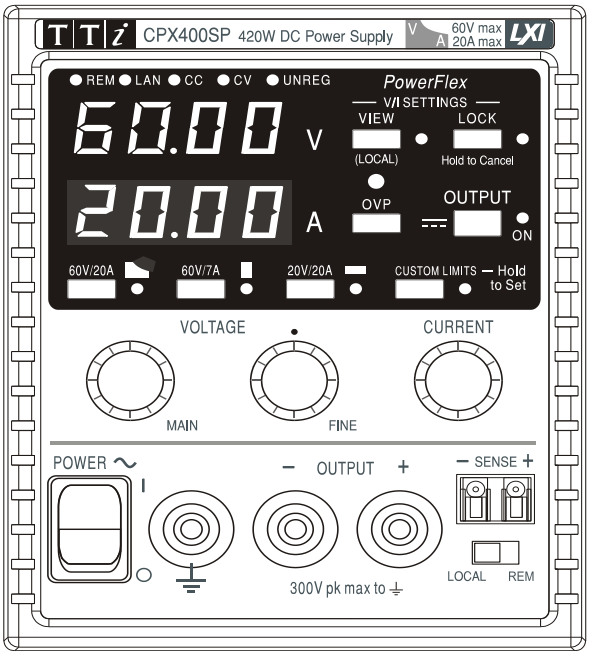

The load should be connected to the positive (red) and negative (black) terminals marked OUTPUT. The OUTPUT terminals are rated at 30A.

Remote sense connections to the load, if required, are made from the positive (+) and negative (–) SENSE terminals. Switch the LOCAL/REMOTE switch to REMOTE when remote sensing is required. Switch back to LOCAL when remote sensing is not in use.

The terminal marked ⏚ is connected to the chassis and safety earth ground.

Rear Panel Connections (CPX400SP & CPX400SA only)

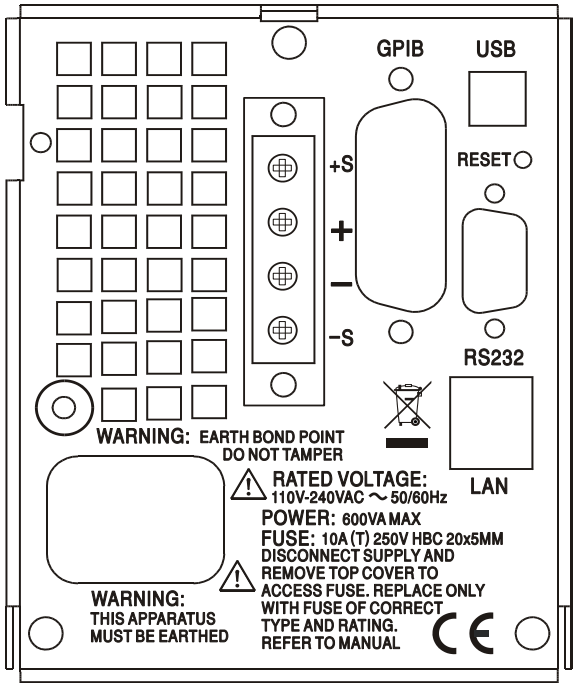

CPX400SP

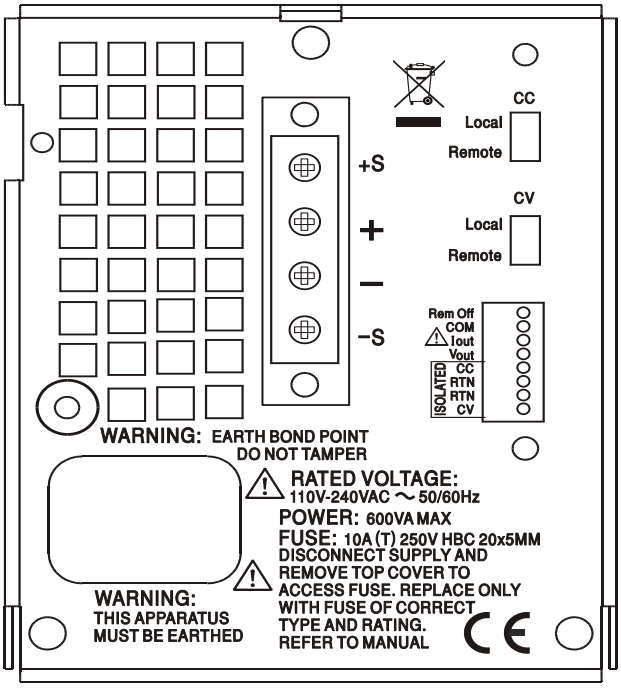

CPX400SA

Output Terminals

The output and sense terminals are duplicated on the rear panel terminal blocks and are marked +O/P, −O/P, +S and −S. These connections are paralleled with their front panel equivalents.

Switch the LOCAL/REMOTE switch to REMOTE when remote sensing is required. When the rear panel Output terminals are used, the use of remote sense is always recommended to ensure that output regulation is maintained within specification; connections can be made to either the front or the rear remote sense terminals but never to both pairs of terminals at the same time. Switch back to LOCAL when remote sensing is not in use.

Analogue Remote Control (CPX400SA only)

Connections CV and CC provide analogue control of the Output Voltage and Current Limit respectively when slide switches CV and CC are set to Remote. These inputs, and their common return signal (RTN), are isolated from the output; the isolation rating with respect to the output is 300V max. The input scaling can be set independently, by intermal links, as 0 to 5 Volts (the factory default) or 0 to 10 Volts for 0 to 100% of maximum output. Maximum permissible input is 60V. CV and CC can be used independently or together.

Return slide switches CV and CC to Local when analogue remote control is not in use.

Analogue Out (CPX400SA only)

Connections V_{OUT} and I_{OUT} provide analogue outputs scaled to the set output voltage and set current limit respectively. The scaling is fixed at 0 to 5 Volts for 0 to 100% of maximum output. V_{OUT} and I_{OUT} are always present on the terminals, whether the instrument is under local or remote control.



Warning! COM is referenced to the output control circuit and will be within ~1V of the positive output potential. V_{OUT} and I_{OUT} are always present on the terminals.



Do not apply external voltages to these terminals.

Remote On/Off (CPX400SA only)

A switch closure or logic low between connections Rem Off and COMmon will turn off the output.



Warning! COM is referenced to the output control circuit and will be within ~1V of the positive output potential.



Do not apply external voltages to these terminals.

RS232 (CPX400SP only)

9−pin female D−connector with pin connections as shown below. Can be connected to a standard PC port using a fully wired 1:1 male-female cable without any cross-over connections.

Pin	Name	Description
1	RI	Passively asserted (+V through 10kΩ)
2	TXD	Transmitted data from instrument
3	RXD	Received data to instrument
4	CTS	
5	GND	Signal ground
6	RTS	Passively asserted (+V through 10kΩ)
7	DSR	No internal connection
8	DTR	
9	CD	No internal connection

Signal ground is connected to instrument ground.

USB (CPX400SP only)

The USB port is connected to instrument ground. It conforms with USB 2.0 (Full Speed) and accepts a standard USB cable. The Windows plug-and-play functions should automatically recognise that the instrument has been connected. If the correct driver is not found, follow the Windows on-screen prompts and install the required files from the CD supplied.

LAN (CPX400SP only)

The LAN interface is designed to meet 1.4 LXI (Lan eXtensions for Instrumentation) core 2011. Remote control using the LAN interface is possible using a TCP/IP Socket protocol. The instrument also contains a basic Web server which provides information on the unit and allows it to be configured. Since it is possible to misconfigure the LAN interface, making it impossible to communicate with the instrument over LAN, a LAN Configuration Initialise (LCI) mechanism is provided via a recessed switch on the rear panel (marked LAN RESET) to reset the unit to the factory default.

Further details are given in the Remote Operation chapter. For more information on LXI standards refer to www.lxistandard.org/home

GPIB (optional - CPX400SP only)

The optional GPIB signal grounds are connected to the instrument ground. The implemented subsets are:

SH1 AH1 T6 TE0 L4 LE0 SR1 RL2 PP1 DC1 DT0 C0 E2

The optional GPIB address is set from the front panel.

Switching On

The POWER switch is located at the bottom left of the front panel.

When the POWER switch is turned on the lower meter briefly indicates the instrument firmware revision; on the CPX400SP this is followed by the interface firmware revision (**`IF`** shows in the upper meter) before the display shows Volts and Amps; the LAN lamp above the right hand output meters will also light but will go off after ~30s if an operational LAN connection is not found, see LAN Error paragraph in LAN Interface section.

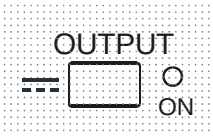

At power on, the factory default setting is for the output to be off. The preset output volts and current will be determined by the present control settings and shown in the display. The VIEW lamp is lit to indicate that it is the preset values that are being displayed. All other settings will be the same as they were at last power off.

The dc output state at power-on can be set to be 'always off' or 'same as at last power-off'. The setting can be changed as follows. With the VIEW key held down, press and hold down the ⎓ OUTPUT key; the display will first show the present setting for 1 second (**`OP OFF`** if the factory default is still selected) before flashing the new setting for 2 seconds (**`LASt Set`** in this instance). After 2 seconds the new setting is shown continuously in the display and the change is implemented; release the OUTPUT and VIEW keys. Repeating the procedure will change the setting back to the previous state.

Setting Up the Output

With the POWER switch on (**I**) and the OUTPUT switch off the output voltage and current limit can be accurately preset using the VOLTAGE and CURRENT controls; the upper meter shows the set voltage and the lower meter shows the set maximum current.

When the OUTPUT switch is switched on, the OUTPUT ON lamp and the CV (constant voltage) lamp light; the upper meter continues to show the set voltage but the lower meter now shows the actual load current.

Range Selection & Custom Limits

There are 4 possible ranges, selected by the keys immediately below the display; the associated lamp lights to show which range is selected. Because changing ranges can change the output voltage, range changing is only allowed if the output is off. If attempts are made to change range with the output on, the display will briefly show the message **`turn oFF`** and the output lamp will flash to prompt the user to turn the output off. The factory default range selection is the 60V/20A

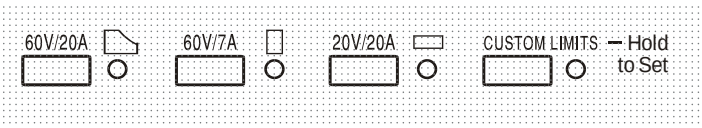

PowerFlex range which limits the maximum current at the set voltage to that determined by the power envelope or 20A, whichever is the lower, see Power Limit paragraph later in this section.

The 60V/7A and 20V/20A ranges operate conventionally such that Constant Voltage (CV) operation is possible over the full voltage range, provided that the load current is below the range maximum; operation is always within the power envelope of the instrument. The VOLTAGE and CURRENT controls are always scaled to set the range maximum when fully clockwise.

The CUSTOM LIMITS capability allows the maximum values of both the VOLTAGE and CURRENT controls to be redefined by the user such that the controls operate over specific, lower, ranges. This not only has the advantage of protecting against the accidental application of, for example, excess voltages to the load, but also provides higher resolution analogue control over the specified ranges using the full 300º rotation of the controls.

To set new CUSTOM LIMITS turn the output off and select the 60V/20A range; preset limits are shown in the display. Use the MAIN and FINE VOLTAGE controls and the CURRENT control to set,

precisely, the new custom limits required. Press and hold the CUSTOM LIMITS key; the displays flash the new limits for ~2s, after which the lower (A) display shows **SEt** to indicate that the new limits have been stored. Release the key; the displays now show the preset V and I limits corresponding to the knob settings within the newly defined ranges.

If the new limits fall outside the power envelope (see Power Limit paragraph below), such that operation could change from CV or CC (Constant Current) to UNREGulated (power limit) under certain load conditions, the CUSTOM LIMITS lamp will flash during the setting process to indicate this and will continue to do so until the range key is released. If the lamp is constantly on during setting this indicates that V_{MAX} x I_{MAX} <420W and that operation should therefore generally stay in CV or CC mode. CUSTOM LIMITS remains selected until another range key is pressed. Reselecting CUSTOM LIMITS with a short key press recalls the same custom limits as last set.

When CUSTOM LIMITS is selected, the limit of the MAIN VOLTAGE control is exactly as set by the above procedure when the FINE control is set at its mid-point, marked on the panel with a • . The FINE control itself can be usefully used to give an additional fine adjustment of ±1% (of the range maximum).

Constant Voltage

The output voltage is adjusted using the MAIN and FINE VOLTAGE controls; the CURRENT control sets the maximum current that can be supplied.

The CV lamp lights to show constant voltage mode.

Constant Current

If the load resistance is low enough such that, at the output voltage set, a current greater than the current limit setting would flow, the power supply will automatically move into constant current operation. The current output is adjusted by the CURRENT control and the VOLTAGE controls set the maximum voltage that can be generated.

The CC lamp lights to show constant current mode.

Instantaneous Current Output

The current limit control can be set to limit the continuous output current to levels down to 10mA. However, in common with all precision bench power supplies, a capacitor is connected across the output to maintain stability and good transient response. This capacitor charges to the output voltage and short-circuiting of the output will produce a current pulse as the capacitor discharges which is independent of the current limit setting.

Power Limit

The maximum current at different voltage settings is limited by the power envelope illustrated below:

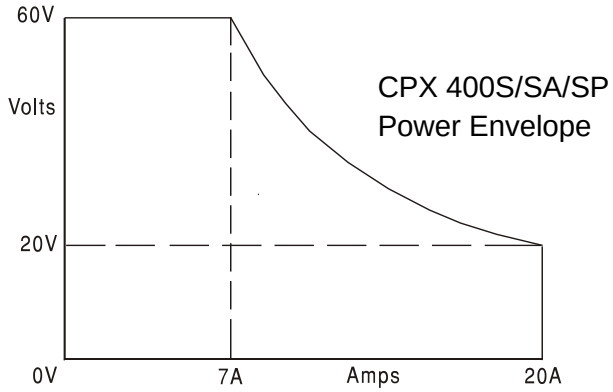

The power envelope is set to give 60V/7A, 42V/10A and 20V / 20A under all supply conditions (both outputs loaded); at lower output voltages the output power is restricted by the 20A current maximum.

When the power limit is exceeded, the status indication will change from CV or CC to UNREG. For example, if the supply is set to 20V, with the current limit at maximum, and is connected to a 2Ω load, 10 Amps will flow and the supply will be in CV mode. As the voltage across the load is increased, the power into the load increases until, at about 29V, the power limit is exceeded and the supply changes from CV to UNREG.

Connection to the Load

The load should be connected to the positive (red) and negative (black) front panel OUTPUT terminals. Both are fully floating and either can be connected to ground. Alternatively, on the CPX400SA/SP, connection can be made to the duplicate rear panel Output terminals, appropriate for when the instrument is used in a rack.

When the rear panel Output terminals are used, the use of remote sense is always recommended to ensure that output regulation is maintained within specification, see Remote Sensing section below. If the rear panel Output terminals are used without remote sense make sure that the front panel switch is set to LOCAL. Regulation will be degraded a little when local sense is used because of the additional small voltage drop in the internal wiring to the rear terminals.

Remote Sensing

The instrument has a very low output impedance, but this is inevitably increased by the resistance of the connecting leads. At high currents this can result in significant differences between the indicated source voltage and the actual load voltage (two 5mΩ connecting leads will drop 0.2V at 20 Amps, for instance). This problem can be minimised by using short, thick, connecting leads, but where necessary it can be completely overcome by using the remote sense facility.

This requires the sense terminals to be connected to the output at the load instead of at the source; insert wires into the spring-loaded SENSE terminals and connect directly to the load. Switch the LOCAL/REMOTE switch to REMOTE. To avoid instability and transient response problems, care must be taken to ensure good coupling between each output and sense lead. This can be done either by twisting the leads together or by using coaxially screened cable (sense through the inner). Instability and poor regulation caused by noise on the sense leads when connected to complex loads can be minimised by fitting a suitable capacitor directly between each Sense terminal and its associated Output terminal at the PSU front panel. A polyester or low ESR electrolytic with a value between 10uF and 100uF will generally be adequate.

The voltage drop in each output lead must not exceed 0.5 Volts.

Switch the LOCAL/REMOTE switch back to LOCAL when remote sensing is not in use.

When the rear panel Output terminals are used on the CPX400SA/SP, the use of remote sense is always recommended to ensure that output regulation is maintained within specification; connections can be made to either the front or the rear remote sense terminals but never to both pairs of terminals at the same time. Connect the Sense terminals to the load, following the guidelines above, and set the LOCAL/REMOTE switch to REMOTE.

Series or Parallel connection with other units

The output of the power supply is fully floating and may be used in series with other power supply units to generate high DC voltages up to 300V DC.



The maximum permissible voltage between any terminal and earth ground (⏚) is 300VDC.

WARNING! Such voltages are exceedingly hazardous and great care should be taken to shield the output terminals for such use. On no account should the output terminals be touched when the unit is switched on under such use. All connections to the terminals must be made with the power switched off on all units.

It should be noted that the unit can only source current and cannot sink it, thus units cannot be series connected in anti-phase.

The unit can be connected in parallel with others to produce higher currents. Where several units are connected in parallel, the output voltage will be equal to that of the unit with the highest output voltage setting until the current drawn exceeds its current limit setting, upon which the output will fall to that of the next highest setting, and so on. In constant current mode, units can be connected in parallel to provide a current equal to the sum of the current limit settings. For optimum operation connect the power supplies separately to the load.

Note that the output terminals are rated at 30A maximum; if two or more outputs are operated in parallel to source higher currents than this the junction should be made at a separate point, not one of the terminals.

Protection

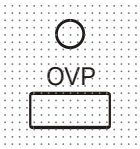

Overvoltage protection (OVP) is fully variable within the range 1V to 66V. For CPX400S and CPX400SP in Local mode the OVP limit is set via the screwdriver adjustable OVP preset potentiometer, accessible through a hole in the front panel immediately above the OVP key. Rotating the preset clockwise increases the limit, which can be read directly on the user display by pressing the OVP key beneath the preset. When in remote control mode (CPX400SP only) an independent OVP value is used which is set via the RS232, USB, LAN (LXI) or GPIB (optional) interfaces (default value 66V); see the Remote Command section for further details. If the voltage on the output exceeds the set OVP for any reason, including an externally forced voltage, the output will be tripped off.

Over-current protection (OCP) is implemented in firmware and can only be set and used when under remote control via the RS232, USB, LAN (LXI) or GPIB (optional) interfaces (CPX400SP only). Setting resolution is 10mA and typical response times are 500ms. In local mode, and for CPX400S/SA, OCP is still active but automatically defaults to 22 Amps.

When the output is tripped the displays will show **`OUP triP`**. and the OUTPUT lamp will flash. Turn the output off; the trip message should be replaced with the normal preset V and I readings. When the cause of the trip has been removed the output can be switched on again.

Even with the output off the load is still connected to the power supply output stage. Do not apply external voltages in excess of 70V to the power supply terminals or damage may result.

The output is protected from reverse voltages by a diode; the continuous reverse current must not exceed 3 Amps, although transients can be much higher.

Over-temperature Protection

A sensor on the secondary heatsink will detect over-temperature due to blocked air-flow, fan failure or other circuit fault. Over-temperature will turn the output off, the OUTPUT indicator will flash, and the display will show the message **`OtP trip`**. The output will remain shut down even after the heatsink has cooled down. When the cause of the over-temperature has been removed and the heatsink has cooled to normal working temperatures the output can be reset by turning the POWER switch to off (O), then on (I) again.

View Settings

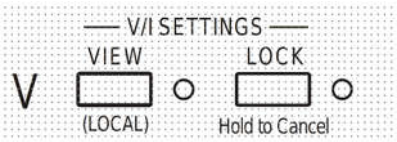

The set voltage and current limit are always shown when the output is off but can also be viewed when the output is on by pressing the VIEW key; the VIEW lamp is lit whilst the VIEW key is pressed.

Lock Settings

Pressing the LOCK key digitally locks the set voltage and current limit. The settings are stored with a precision of better than 1 digit. Subsequent adjustments of the VOLTAGE and CURRENT controls will have no effect.

Because cancelling LOCK will cause the output settings to change if the VOLTAGE and CURRENT control positions have been moved, warning reminders are given before LOCK is cancelled. Press and hold the key to cancel LOCK.

If the OUTPUT is off (the safe condition) the display will flash the 'unlocked' settings twice before the change is implemented; the LOCK lamp goes off.

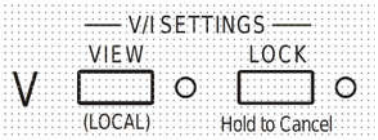

If the output is still on, **`OP on`** (output on) will flash twice in the display, followed by flashing of the new 'unlocked' settings for 2-3 seconds (slowly at first, then faster) before the change is finally implemented; the LOCK lamp goes off when the change is made.

Releasing the LOCK key at any time while the display is flashing will abort the LOCK cancellation.

Attempting to select a different range with LOCK enabled is not allowed; if attempted, the message **`Unloc`** is shown briefly in the display and the LOCK lamp is also flashed. If the output is also on when these actions are attempted the message **`turn oFF`** is first shown in the display (accompanied by the output lamp flashing) followed by the message **`Unloc`** (with the LOCK lamp flashing).

The LOCK status at power on is the same as at last power off.

Remote analogue control of output voltage and current is possible using variable external control voltages applied between the rear panel CV or CC and Return (RTN) inputs respectively. These inputs are isolated from the output; the isolation rating with respect to the output is 300V max. Inputs are protected against excess input voltages of up to 60V.

The Analogue Out control voltages V_{out} and I_{out} of one unit acting as a 'master' can be used to control a 'slave' unit via the slave's CV and CC inputs respectively.

Analogue Voltage Control

Remote analogue voltage control is achieved by setting the rear panel CV switch to Remote and applying a programming voltage between the inputs CV and RTN.

The front panel VOLTAGE controls and voltage range selection are disabled when Remote is set on the CV switch. Set the switch to Local to return control to the front panel.

The default input voltage scaling is 0V to 5V for 0 to 100% of the maximum output voltage. The input voltage scaling can be changed to be 0V to 10V by changing an internal shorting link. Disconnect the instrument from the AC source and remove the cover as follows. Remove the two plastic push-rivets at each side edge of the top cover. Use the blade of a small screwdriver to first ease out the rivet head and then fully remove the rivet body. Remove the three rear panel screws securing the top cover; slide the cover back and lift off.

Referring to the top view of the instrument shown in the drawing, move the tall shorting link in position LK1 to link centre and '10V' pins instead of centre and '5V' pins.

Remote CV can be used with either Local or Remote CC.

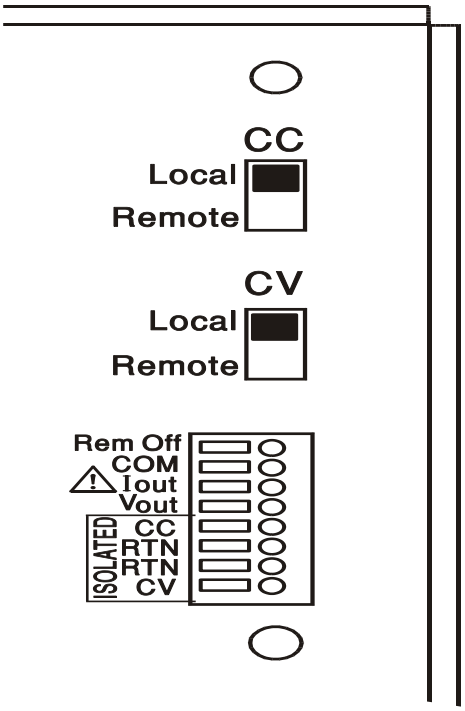

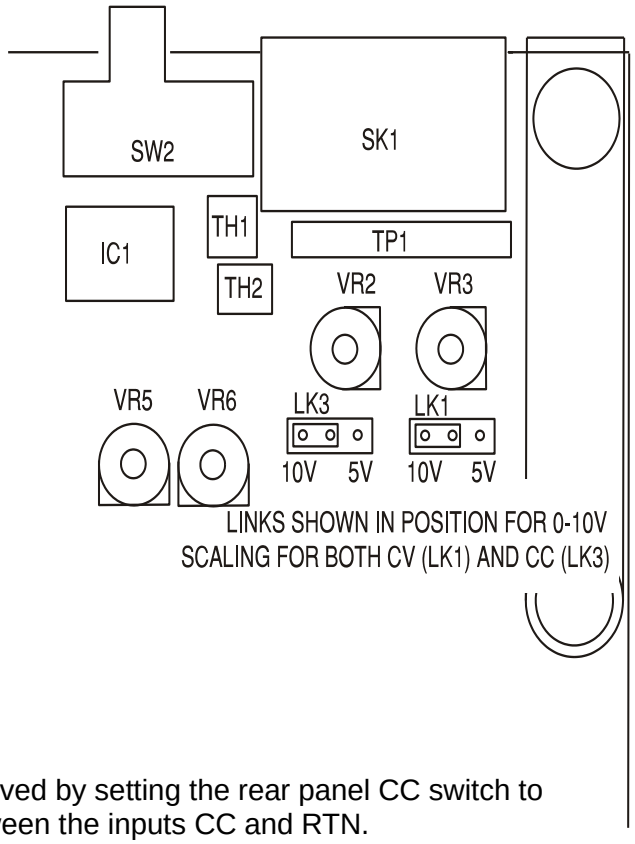

Analogue Current Control

Remote analogue constant current control is achieved by setting the rear panel CC switch to Remote and applying a programming voltage between the inputs CC and RTN.

The front panel CURRENT control and current range selection are disabled when Remote is set on the CC switch. Set the switch to Local to return control to the front panel.

The default input voltage scaling is 0V to 5V for 0 to 100% of the maximum output current. The input voltage scaling can be changed to be 0V to 10V by changing an internal shorting link. Disconnect the instrument from the AC source and remove the cover as follows.

Remove the plastic push-rivets at each side edge of the top cover. Unse the blade of a small screwdriver to first ease out the rivet head and then fully remove the rivet body. Remove the three rear panel screws securing the top cover; slide the cover back and lift off.

Referring to the top view of the instrument shown in the drawing, move the tall shorting link in position LK3 to link centre and '10V' pins instead of centre and '5V' pins.

Remote CC can be used with either Local or Remote CV.

CAUTION. Do not apply external control voltages to either the CV or CC input that exceed the maximum for the set input range (5V or 10V). The inputs are protected against excess voltages but the instrument will attempt to supply an output voltage or current in excess of its maximum rating if the control voltage exceeds its range limit, with possible consequential damage.

Practical Considerations when using CV and CC

The stability of the control voltages directly affects the stability of the output. Any noise on the control signals will generate noise on the output. To minimise noise on the output connect the control voltages to the CV, CC and RTN inputs using twisted or screened pairs (screens grounded at one end only) and keep the connections as short as possible. Note that output noise is inherently slightly higher when analogue remote control is used because of intrinsic noise in the isolating input circuitry, see the Specification.

The diagrams below show the connections for Constant Voltage (CV) and Constant Current (CC) control using an external voltage.

Constant Voltage Control

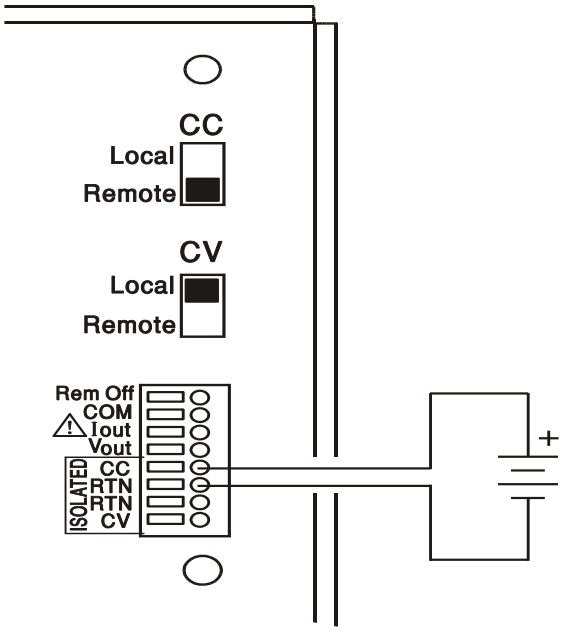

Constant Current Control

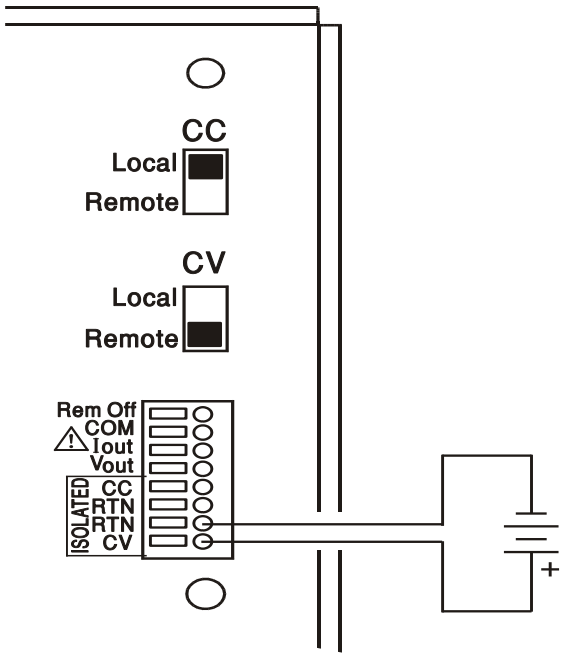

Note that when the OUTPUT is on, the instrument's display always shows the actual output voltage and current, whichever control source is active. However, when the OUTPUT is off, the display will show the preset voltage and current set by the front panel controls (or the digital interface if active) and not the values determined by the CV and CC inputs even if they have been made active (CV and CC set to Remote). To avoid confusion it is good practice to set the front panel controls to minimum when remote CV and CC are used.

Analogue Out Control Voltages

Analogue Out control voltages V_{out} and I_{out} are generated from the actual internal control voltages, for which the active source can be the front panel controls, or the remote analogue inputs CV and CC. V_{out} and I_{out} are scaled such that 0 to 100% of the maximum output voltage and current generate 0V to 5V at the rear panel V_{out} and I_{out} terminals with respect to COM. I_{out} always corresponds to the set current, whether the output is on or off, but V_{out} goes to 0V when the output is off.

Warning! COM is referenced to the output control circuit and will be within ~1V of the positive output potential. V_{OUT} and I_{OUT} are always present on the terminals.

Parallel Operation in Master-Slave Configuration

Parallel operation in Master-Slave configuration permits higher output currents to be realised with equal current sharing between units and control of both voltage and current from a single unit. The diagram shows 3 units connected in parallel. For equal current sharing each unit must be independently connected to the load with pairs of wires of equal gauge and length to ensure equal voltage drops. Connect the V_{out} , I_{out} and COM of the master to the CV, CC and RTN inputs of the slaves (set CV and CC switches to Remote) as shown.

Parallel Operation in Master-Slave Configuration

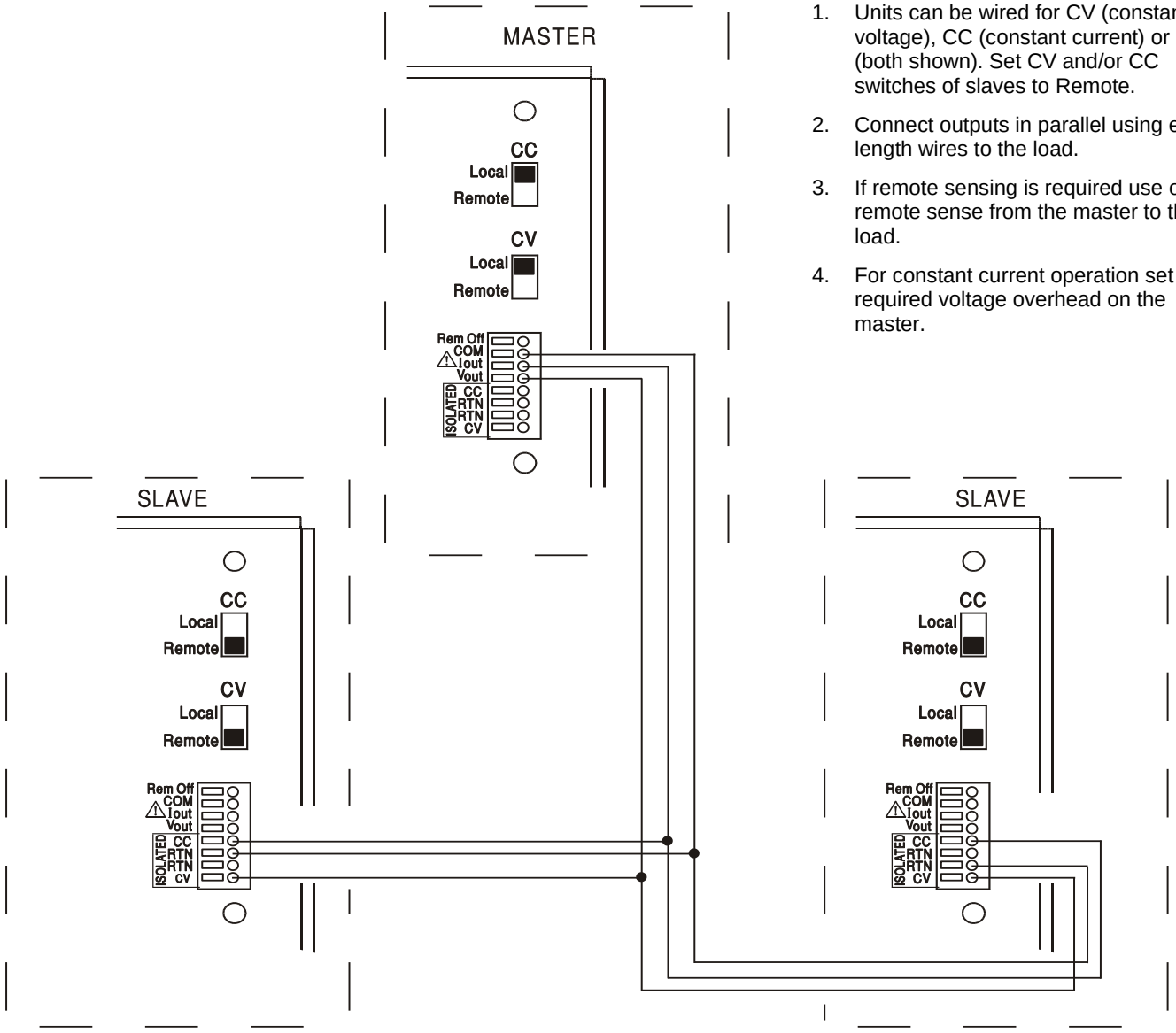

Notes:

1. Units can be wired for CV (constant voltage), CC (constant current) or both (both shown). Set CV and/or CC switches of slaves to Remote.
2. Connect outputs in parallel using equal length wires to the load.
3. If remote sensing is required use only remote sense from the master to the load.
4. For constant current operation set the required voltage overhead on the master.

The voltage and current of the master can be set by either the front panel controls, via the digital interface, or by an external voltage applied to its own CV and CC analogue control inputs.

In constant voltage mode the voltage across the load is that set on the master unit by its front panel controls, via the digital interface or by the analogue CV remote control input. The current limit for the system (i.e. the current in constant current mode) is the current limit set on the master x n, where n is the total number of units connected in parallel.

Isolated or Series Operation in Master-Slave Configuration

Isolated or Series operation in Master-Slave configuration permits tracking output voltages and current limits to be set for multiple units from a single instrument. The diagram shows 2 units connected in series for tracking ±Volts and tracking current limits. Connect the V_{out} , I_{out} and COM of the master to the CV, CC and RTN inputs of the slaves (set CV and CC switches to Remote) as shown.

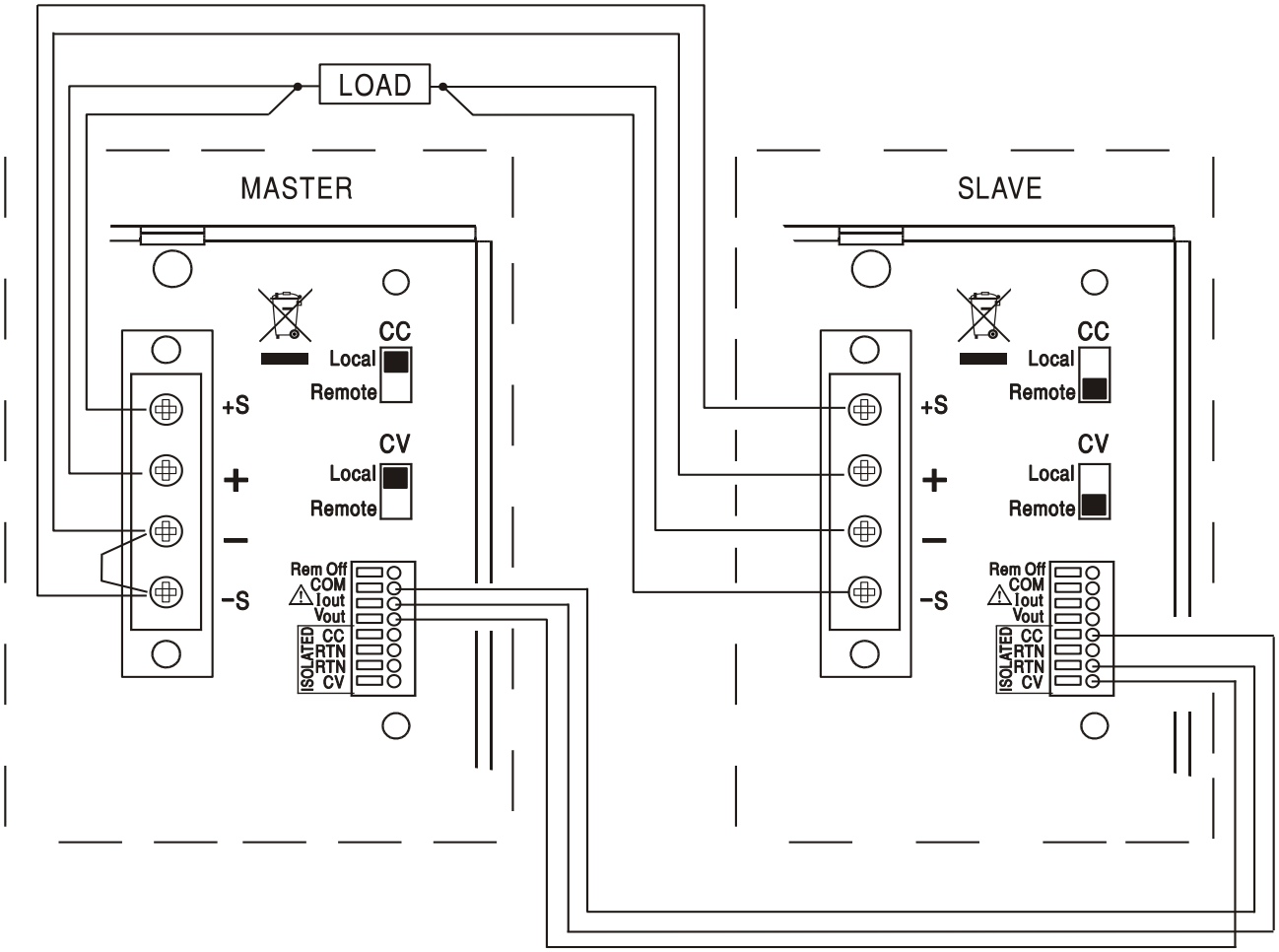

The diagram shows remote sense connections to the load; set the front panel sense switch to Remote. If remote sensing is not required, do not use the sense wires and set the sense switch to Local.

If independent current limits are required set CC to Local and set the limits from the front panel of each unit.

Warning! In series operation take care not to exceed the maximum rated operating voltage (300V) of any terminal with respect to earth ground (⏚).

Remote Off

A switch closure or logic low between the rear panel Rem Off and COM inputs will remotely turn off the output if it was previously on; the front panel OUTPUT lamp will also go off. Opening the switch between Rem Off and COM will turn the output on again.

Warning! COM is referenced to the output control circuit and will be within ~1V of the positive output potential.

The instrument can be remotely controlled via its RS232, USB, LAN or GPIB (optional) interfaces.

USB remote control operates in a similar way to RS232 but via the USB connector. Software supplied with the instrument sets up the controlling computer to treat the USB connection as a virtual COM port. Application software on the computer can then access the instrument via that COM port.

The LAN interface is designed to meet 1.4 LXI (Lan eXtensions for Instrumentation) Core 2011. Remote control using the LAN interface is possible using the TCP/IP Sockets protocol. The instrument also contains a basic Web server which provides information on the unit and allows it to be configured from a web browser. Simple command line control from the browser is also possible.

All interfaces are, by default, live at all times (a LXI requirement) but access to individual interfaces may be restricted using the configuration options on the web pages.

Interface Locking

All the remote interfaces are live at all times, to remove any need to select the active interface and to ensure that the LAN interface is always available (as demanded by the LXI standard). To reduce the risk of the instrument being inadvertently under the control of two interfaces at once a simple lock and release mechanism is provided in the instruction set. The lock is automatically released where it is possible to detect disconnection and when the local button is pressed. Access to the interfaces may also be restricted using the web pages.

Any interface may request to have exclusive control of the instrument by sending an “IFLOCK” command. The lock may only be released by sending an “IFUNLOCK” command from the interface instance that currently has the lock and may be queried from any interface by sending an “IFLOCK?” command. The reply to any of these commands will be “-1” if the lock is owned by another interface instance, “0” if the interface is free and “1” if the lock is owned by the requesting interface instance. Sending any command from an interface without control privileges that attempts to change the instrument status will set bit 4 of the Standard Event Status Register and put 200 into the Execution Error Register to indicate that there are not sufficient privileges for the required action.

Note: it is also possible to configure the privileges for a particular interface to either ‘read only’ or ‘no access’ from the Web page interface.

Address Selection

The instrument address capability is strictly required only by the optional GPIB interface. However, use can be made of the ADDRESS? command over any of the interfaces to easily identify which instrument is being controlled by a particular COM port (for RS232 or USB) or TCP socket (for LAN). Note that the LAN interface also has a separate ‘Identify’ function, accessible from the instrument’s web pages, that flashes the instrument’s display until the function is cancelled.

The address is set from the instrument’s front panel as follows. Start with the instrument off and, with the VIEW and LOCK keys both held down, switch the instrument on. The display will show **`Addr`** in the Volts display and **`nn`** in the Amps display where **`nn`** is the present setting (default **`Addr 11`**). The address can be decremented and incremented by the VIEW and LOCK keys respectively in the range 1 to 31 inclusive (not 0), with 'wrap-round'. The address is confirmed and the process exited by holding down the OVP key; the display will show **`SEt`** and the new address for approximately 2 seconds, returning to the normal Volts and Amps display when the new address has been accepted.

The address can also be set from the instrument’s web pages.

Remote/Local Operation

At power-on the instrument will be in the local state with the REMote indicator off. In this state all front panel operations are possible. When the instrument is addressed to listen and a command is received the remote state will be entered and REMote will be turned on. In this state the front panel is locked out and remote commands only will be processed. The V/I settings and output state are unchanged but LOCK is cancelled (if it was on) and the range setting is defaulted to 60V/20A. The Sense settings remain as set by the front panel switches.

The instrument may be returned to the local state by pressing the LOCAL key; however, the effect of this action will only remain until the instrument is addressed again or receives another character from the interface, when the remote state will once again be entered. Returning to Local by this action, or by the use of the LOCAL command, will keep the V/I settings at their last remotely set values, with LOCK on, and will leave the output in its present state.

RS232 Interface

RS232 Interface Connector

The 9-way D-type serial interface connector is located on the instrument rear panel. The pin connections are as shown below:

Pin	Name	Description
1	RI	Passively asserted (+V through 10kΩ)
2	TXD	Transmitted data from instrument
3	RXD	Received data to instrument
4	CTS	
5	GND	Signal ground
6	RTS	Passively asserted (+V through 10kΩ)
7	DSR	No internal connection
8	DTR	
9	CD	No internal connection

RS232 Connections

The RS232 interface should be connected to a standard PC port using a fully wired 1:1 male-female cable without any cross-over connections. Alternatively, only pins 2, 3 and 5 need be connected to the PC, but with links made in the connector at the PC end between pins 1, 4 and 6 and between pins 7 and 8, see diagram.

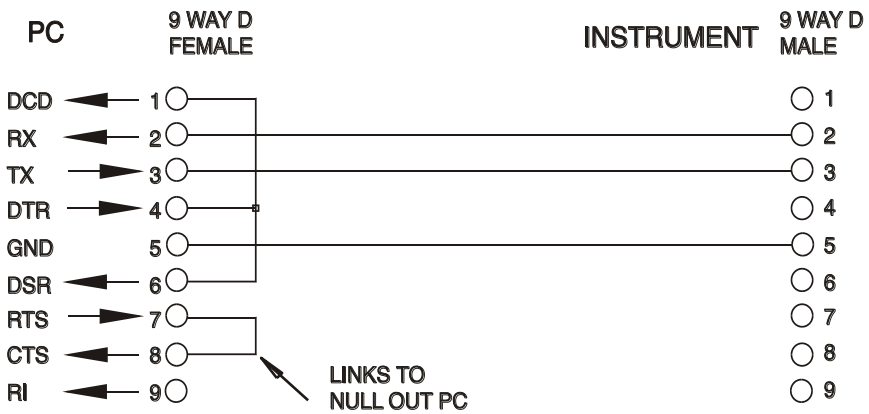

Baud Rate for this instrument is fixed at 9600; the other parameters are fixed as follows:

Start Bits: 1	Parity: None
Data Bits: 8	Stop Bits: 1

RS232 Character Set

Because of the need for XON/XOFF handshake it is possible to send ASCII coded data only; binary blocks are not allowed. Bit 7 of ASCII codes is ignored, i.e. assumed to be low. No distinction is made between upper and lower case characters in command mnemonics and they may be freely mixed. The ASCII codes below 20H (space) are not used. In this manual 20H, etc. means 20 in hexadecimal. The unit will send XOFF when there are 50 free bytes remaining and XON when this increases to 100 bytes.

USB Interface

Using the USB interface for remote control requires a Communications Device Class driver on the PC to provide a virtual COM port instance. In Windows a suitable driver is provided by Microsoft, but it is not installed by default. The data (.INF) file to control the installation is provided on the Product Documentation CD delivered with the unit; however the same driver is also used by many other instruments from this manufacturer and may already be known to the PC.

To install the driver for the first time, first switch the unit on, and then connect the USB port to the PC. The Windows plug and play functions should automatically recognise the attachment of new hardware to the USB interface and (possibly after searching the internet for some time) prompt for the location of a suitable driver. Follow the Windows prompts and point to the CD, then the sub-directory for this product, and then to the USB Driver sub-directory below that. The file is named USB_ARM_VCP_xxx**.**INF, where xxx is a version number. (A readme.pdf file will also be found in that directory if further assistance is needed.)

In some cases Windows will not complete this procedure (especially recent versions which search the internet first, looking for the unique Vendor ID and Product ID), in which case the instrument will show in Device Manager as “not working properly”. If this happens, select this device, right click and choose “update driver software...” and then “browse this computer for driver software...” and then locate the .INF file on the CD as described above.

Once Windows has installed the device driver it will assign a COM port number to this particular unit. This number will depend on previous COM port assignments on this PC, and it may be necessary to use Device Manager to discover it. Each instrument has a unique USB identifier which is remembered by the system, so it will receive the same COM port number whenever it is attached to the same PC (regardless of the physical interface socket used), even though the COM port will disappear while the instrument is disconnected or switched off. Other instruments will receive different COM port numbers.

Note that a different PC will not necessarily assign the same COM port number to a particular instrument (it depends on the history of installations), however Device Manager can be used to change the assignments given.

This virtual COM port can be driven by Windows applications (including a terminal emulator) in exactly the same way as any standard COM port, except that the Baud rate and other settings are unnecessary and are ignored. Some old applications might not function with COM port numbers 3 or 4, or above 9. In this case, use Device Manager to change the allocation given. Once it is installed, the driver will be maintained by Windows Update in the usual way.

LAN Interface

The LAN interface is designed to comply with 1.4 LXI standard Core 2011 and contains the interfaces and protocols described below. Since it is possible to misconfigure the LAN interface, making it impossible to communicate with the instrument over LAN, a LAN Configuration Initialise (LCI) mechanism is provided via a recessed switch on the rear panel to reset the unit to the factory default. The default setting is for the instrument to attempt to obtain settings via DHCP if available

or, if DHCP times out (30 seconds), via Auto-IP. In the very unlikely event that an Auto-IP address cannot be found a static IP address of 192.168.0.100 is assigned. Resetting the LAN removes any password protection.

For more information on LXI standards refer to www.lxistandard.org/home .

LAN Connection

To use the LAN interface, the IP address of the unit must be known. There is a LXI Discovery Tool on the supplied CD-ROM which can be used to display the IP addresses (and other associated information) of all connected devices that comply with the VXI-11 discovery protocol. This tool is a Windows PC application that should be installed and run on the controlling PC with the unit either connected directly to the PC network connector or via a router. Connecting via a router is recommended as this is significantly quicker to assign an IP address; connecting directly to the PC will begin to assign an IP address only after a 30 second DHCP timeout. Double clicking on any entry in the list of devices discovered will open the PC's web browser and display the Home page of that device.

There are also tools for LAN discovery included as part of the National Instruments Measurement and Automation Explorer package and the Agilent Vee application.

The unit will, when first powered up, attempt to obtain settings via DHCP if available or, if DHCP times out (30 seconds), via Auto-IP. In the very unlikely event that an Auto-IP address cannot be found a static IP address of 192.168.0.100 is assigned. During this time the LAN lamp will be lit and it will stay lit if a LAN connection is successfully made. However, if a connection is still not made by the end of the above process, or if the LAN connector is physically removed at any time, the LAN lamp will go off; see LAN Error section for details.

Web Server; Configuration Password Protection

The unit contains a basic web server. This provides information on the instrument and allows it to be configured. The Configure page can be password protected to deter unauthorised changes to the remote operation configuration; the default configuration is ‘no password’.

The Configure page itself explains how to set the password. The password can be up to 15 characters long; note that the **User Name should be left blank**. The password will, however, be reset to the default (no password) if the rear panel LAN RESET switch is used to reset all the LAN parameters to their factory default.

The web pages also have an ‘Identify’ function which allows the user to send an identifying command to the instrument which causes its displays to flash until the command is cancelled.

ICMP Ping Server

The unit contains an ICMP server allowing the instrument to be ‘pinged’ via either its host name or IP address.

VXI-11 Discovery Protocol

The instrument has very limited support of VXI-11 which is sufficient for the discovery protocol and no more.

The instrument implements a Sun RPC Port-mapper on TCP port 111 and UDP port 111 as defined in RPC1183. The calls supported are: NULL, GET PORT and DUMP.

On TCP port 1024 a very simple VXI-11 protocol is implemented sufficient only for instrument discovery. This implements the following calls: CREATE LINK, DEVICE_WRITE, DEVICE_READ and DESTROY_LINK.

Once a link has been created anything written to the device is ignored and any read from the device returns the identification string as would be expected from a “*IDN?” of the form

‘Manufacturer,Model,Serial No.,X.xx – Y.yy’

for example

THURLBY THANDAR,CPX400SP,279730,1.00 – 1.00

where ‘X.xx’ is the revision of the main firmware and ‘Y.yy’ is the revision of the interface firmware. Interface firmware is user field updateable via the USB port.

VISA Resource Name

Because of the limited support for VXI-11(Discovery Protocol only), the instrument must be referred to by its raw socket information when used in software packages which communicate via a VISA resource name. For example, an instrument at IP address 192.168.1.100 would normally have a VISA resource name of "TCPIP0::192.168.1.100::inst0::INSTR" but for this instrument the name must be modified to read "TCPIP0::192.168.1.100::9221::SOCKET" where 9221 is the TCP port used by this instrument for control and monitoring, see below.

XML Identification Document URL

As required by the LXI Standard, the instrument provides an XML identification document that can be queried via a GET at “http://<hostname>:80/lxi/identification” that conforms to the LXI XSD Schema (available at http://www.lxistandard.org/InstrumentIdentification/1.0) and the W3C XML Schema Standards (http://www.w3.org/XML/Schema). This document describes the instrument.

TCP Sockets

The instrument uses 2 sockets on TCP port 9221 for instrument control and monitoring. Text commands are sent to this port as defined in ‘Remote Commands’ and any replies are returned via the same port. Any string must be one or more complete commands. Commands may be separated with either semicolons “;” or line feeds. No terminator is required since the TCP frame contains complete commands though commands may be sent with a terminator if desired (it will be ignored). Each command over TCP behaves as if it is terminated with a command terminator (ASCII character 0AH, line feed).

LAN Error

If a LAN connection is made but an error is detected (e.g. the IP address is the same as another device on the network) then the instrument’s LAN lamp (above the Output 2 meters) will be off until the error is corrected. If a LAN error occurs; check and correct the configuration of the instrument; a LAN Configuration Initialise (LCI) mechanism is provided via a recessed switch on the rear panel (marked LAN RESET) to reset the unit to the factory default. The default setting is for the instrument to attempt to obtain settings via DHCP if available or, if DHCP times out (30 seconds), via Auto-IP. In the very unlikely event that an Auto-IP address cannot be found a static IP address of 192.168.0.100 is assigned.

If no physical LAN connection is found at any time the LAN lamp will be off.

GPIB Interface (optional)

The optional GPIB interface 24-way connector is located on the instrument rear panel. The pin connections are as specified in IEEE Std. 488.1-1987 and the instrument complies with IEEE Std. 488.1-1987 and IEEE Std. 488.2-1987.

GPIB Subsets (optional)

This instrument contains the following IEEE 488.1 subsets:

Source Handshake	SH1
Acceptor Handshake	AH1
Talker	T6
Listener	L4
Service Request	SR1
Remote Local	RL2
Parallel Poll	PP1
Device Clear	DC1
Device Trigger	DT0
Controller	C0
Electrical Interface	E2

GPIB IEEE Std. 488.2 Error Handling – Query Error Register (optional)

The IEEE 488.2 UNTERMINATED error (addressed to talk with nothing to say) is handled as follows. If the instrument is addressed to talk and the response formatter is inactive, and the input queue is empty then the UNTERMINATED error is generated. This will cause the Query Error bit to be set in the Standard Event Status Register, a value of 3 to be placed in the Query Error Register and the parser to be reset. See the Status Reporting section for further information.

The IEEE 488.2 INTERRUPTED error is handled as follows. If the response formatter is waiting to send a response message and a <PROGRAM MESSAGE TERMINATOR> has been read by the parser or the input queue contains more than one END message, then the instrument has been INTERRUPTED and an error is generated. This will cause the Query Error bit to be set in the Standard Event Status Register, a value of 1 to be placed in the Query Error Register and the response formatter to be reset thus clearing the output queue. The parser will then start parsing the next <PROGRAM MESSAGE UNIT> from the input queue. See the Status Reporting section for further information.

The IEEE 488.2 DEADLOCK error is handled as follows. If the response formatter is waiting to send a response message and the input queue becomes full then the instrument enters the DEADLOCK state and an error is generated. This will cause the Query Error bit to be set in the Standard Event Status Register, a value of 2 to be placed in the Query Error Register and the response formatter to be reset thus clearing the output queue. The parser will then start parsing the next <PROGRAM MESSAGE UNIT> from the input queue. See the Status Reporting section for further information.

GPIB Parallel Poll (optional)

Complete parallel poll capabilities are offered on this instrument. The Parallel Poll Enable Register is set to specify which bits in the Status Byte Register are to be used to form the ist local message The Parallel Poll Enable Register is set by the *PRE <NRF> command and read by the *PRE? command. The value in the Parallel Poll Enable Register is ANDed with the Status Byte Register; if the result is zero then the value of ist is 0 otherwise the value of ist is 1.

The instrument must also be configured so that the value of ist can be returned to the controller during a parallel poll operation. The instrument is configured by the controller sending a Parallel Poll Configure command (PPC) followed by a Parallel Poll Enable command (PPE). The bits in the PPE command are shown below:

bit 7 =	X	don't care
bit 6 =	1	Parallel poll enable
bit 5 =	1	
bit 4 =	0	
bit 3 =	Sense	sense of the response bit; 0 = low, 1 = high
bit 2 =	?	bit position of the response
bit 1 =	?	
bit 0 =	?	

Example. To return the RQS bit (bit 6 of the Status Byte Register) as a 1 when true and a 0 when false in bit position 1 in response to a parallel poll operation send the following commands

*PRE 64<pmt>, then PPC followed by 69H (PPE)

The parallel poll response from the instrument will then be 00H if RQS is 0 and 01H if RQS is 1.

During parallel poll response the DIO interface lines are resistively terminated (passive termination). This allows multiple devices to share the same response bit position in either wired-AND or wired-OR configuration, see IEEE 488.1 for more information.

Status Reporting

A separate error and status model is maintained for each interface instance; an interface instance is defined as a potential connection. USB, RS232 and GPIB (optional) are inherently single connections so represent one interface instance each. LAN, however, allows for multiple simultaneous connections and therefore represents multiple interface instances. Two interface instances are allocated to the two TCP socket interfaces and one more is allocated to the Web page interface. Having a separate model for each interface instance ensures that data does not get lost as many commands e.g. '*ESR?' clear the contents on read.

Error status is maintained using a set of registers; these are described in the following paragraphs and shown on the Status Model at the end of this section.

Standard Event Status and Standard Event Status Enable Registers

These two registers are implemented as required by the IEEE Std. 488.2.
Any bits set in the Standard Event Status Register which correspond to bits set in the Standard Event Status Enable Register will cause the ESB bit to be set in the Status Byte Register.

The Standard Event Status Register is read and cleared by the *ESR? command. The Standard Event Status Enable register is set by the *ESE <NRF> command and read by the *ESE? command.

It is a bit field where each bit has the following significance.

Bit 7: Power On. Set when power is first applied to the instrument.

Bit 6: User Request (Not used).

Bit 5: Command Error. Set when a syntax type error is detected in a command from the bus. The parser is reset and parsing continues at the next byte in the input stream

Bit 4: Execution Error. Set when an error is encountered while attempting to execute a completely parsed command. The appropriate error number will be reported in the Execution Error Register, see Error Messages section

Bit 3: Verify Timeout Error. Set when a parameter is set with 'verify' specified and the value is not reached within 5 seconds, e.g. output voltage is slowed by a large capacitor on the output.

Bit 2: Query Error. Set when a query occurs. The appropriate error number will be reported in the Query Error Register, see Query Error Register section.

Bit 1: Not used.

Bit 0: Operation Complete: Set in response to the '*OPC' command.

Execution Error Register

This register contains a number representing the last error encountered over the current interface. The Execution Error Register is read and cleared using the 'EER?' command. On power up this register is set to 0 for all interface instances.

Error messages have the following meaning:

0: No error encountered

1-9: Internal hardware error detected.

100: Range error. The numeric value sent is not allowed. This includes numbers that are too big or too small for the parameter being set and non-integers being sent where only integers are allowed.

101: A recall of set up data has been requested but the store specified contains corrupted data. This indicates either a hardware fault or a temporary data corruption, which can be corrected by writing data to the store again.

102: A recall of set up data has been requested but the store specified does not contain any data.

103: Attempt to read or write a command on a second output when it is not available. Typically this will occur if attempting to program the second output on single channel instruments or on a two-channel instrument which is set to parallel mode.

104: Command not valid with output on.

200: Read Only: An attempt has been made to change the settings of the instrument from an interface without write privileges, see the Interface Locking section.

Limit Event Status and Limit Event Status Enable Registers

For single output power supplies there is one Limit Event Status Register; for dual power supplies (except if operating in parallel mode) there are two. These are read and cleared using 'LSR1?' and 'LSR2?' respectively. On power-up these registers are set to 0 then immediately set to show new limit status.

Any bits set in a Limit Event Status Register which correspond to bits set in the accompanying Limit Event Status Enable Register will cause the LIM1 or LIM2 bit to be set in the Status Byte Register.

Bit 7: Reserved for future use

Bit 6: Set when a trip has occurred that can only be reset from the front panel or by removing and reapplying the AC power.

Bit 5: Reserved for future use

Bit 4: Set when output enters power limit (Unregulated mode).

Bit 3: Set when an output over current trip has occurred

Bit 2: Set when an output over voltage trip has occurred.

Bit 1: Set when output enters current limit (CC mode)

Bit 0: Set when output enters voltage limit (CV mode)

Status Byte Register and Service Request Enable Register

These two registers are implemented as required by the IEEE Std. 488.2.
Any bits set in the Status Byte Register which correspond to bits set in the Service Request Enable Register will cause the RQS/MSS bit to be set in the Status Byte Register, thus generating a Service Request on the bus.

The Status Byte Register is read either by the *STB? command, which will return MSS in bit 6, or by a Serial Poll which will return RQS in bit 6. The Service Request Enable register is set by the *SRE <NRF> command and read by the *SRE? command.

Bit 7 - Not used.

Bit 6 - RQS/MSS. This bit, as defined by IEEE Std. 488.2, contains both the Requesting Service message and the Master Status Summary message. RQS is returned in response to a Serial Poll and MSS is returned in response to the *STB? command.

Bit 5 - ESB. The Event Status Bit. This bit is set if any bits set in the Standard Event Status Register correspond to bits set in the Standard Event Status Enable Register.

Bit 4 - MAV. The Message Available Bit. This will be set when the instrument has a response message formatted and ready to send to the controller. The bit will be cleared after the Response Message Terminator has been sent.

Bit 3 - Not used.

Bit 2 - Not used.

Bit 1 - LIM2. This will be set if any bits in Limit Event Status Register 2 are set and corresponding bits are set in Limit Event Status Enable Register 2.

Bit 0 - LIM1. This will be set if any bits in Limit Event Status Register 1 are set and corresponding bits are set in Limit Event Status Enable Register 1.

Status Model

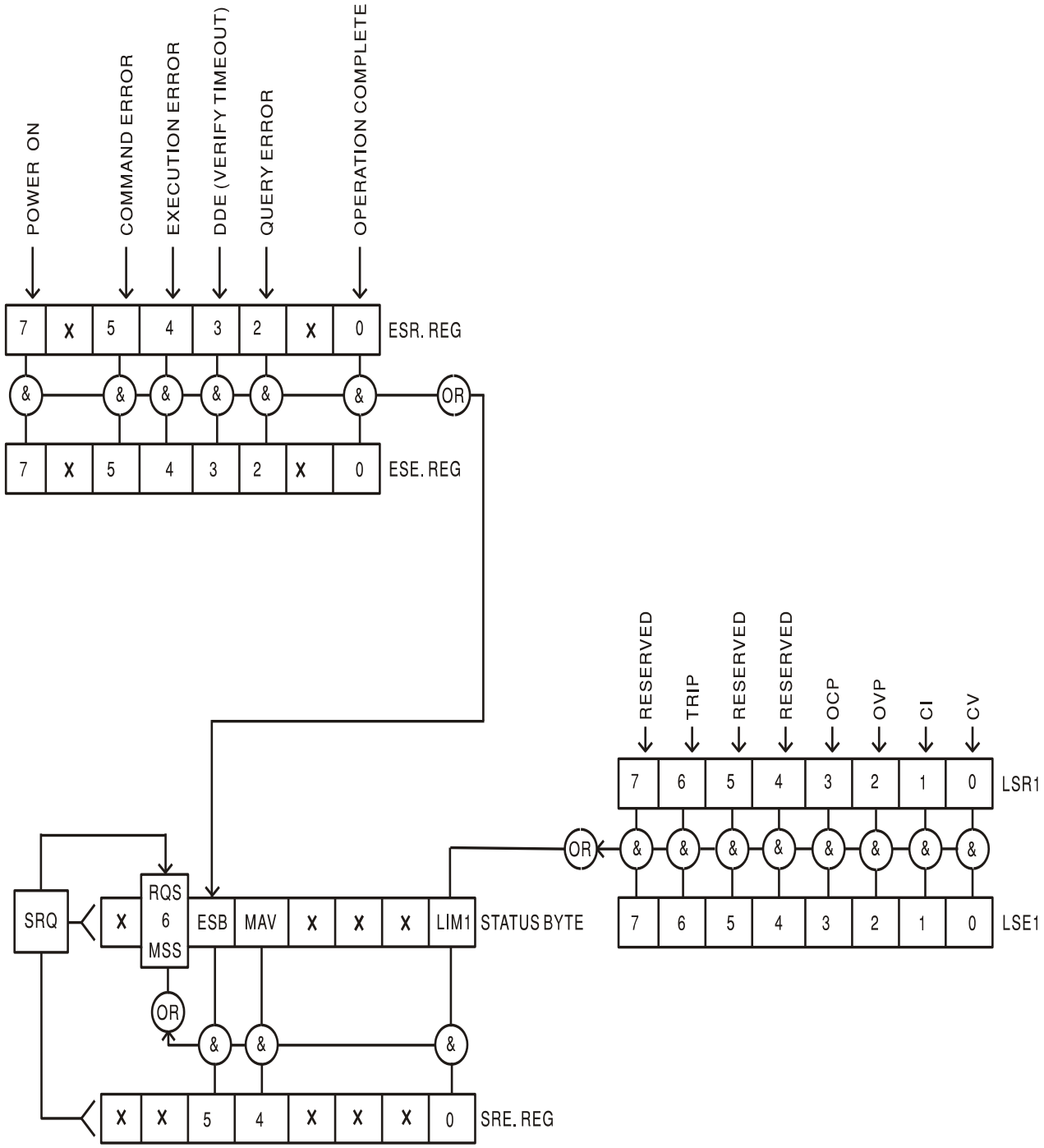

Power-on and Remote Operation Default Settings

The following instrument status values are set at power on:

Status Byte Register	= 0
Service Request Enable Register †	= 0
Standard Event Status Register	= 128 (pon bit set)
Standard Event Status Enable Register †	= 0
Execution Error Register	= 0
Query Error Register	= 0
Parallel Poll Enable Register †	= 0

† Registers marked thus are specific to the GPIB (optional) section of the instrument and are of limited use via other interfaces.

The instrument will be in local state with the front panel controls active.

The instrument parameters at power-on are the same as at last switch off with the exception of the output status. By default, this is always off at power on but the user may change this from the front panel to the same at power on as at switch off, see Switching On paragraph in the Manual Operation section.

The *RST (reset) interface command resets the instrument to the Remote Operation Default settings.

Remote Operation Default settings are:

V_{out}=1V, I_{out}=1A, DeltaV=10mV, DeltaI=10mA, Lock cancelled, OVP = 66V & OCP = 22A.

Remote interface settings and Output state at power-on setting are unchanged by *RST.

Sense settings are as determined by the front panel switches.

RS232/USB Remote Command Format

RS232 input to the instrument is buffered in a 256 byte input queue which is filled, under interrupt, in a manner transparent to all other instrument operations. The instrument will send XOFF when approximately 200 characters are in the queue. XON will be sent when approximately 100 free spaces become available in the queue after XOFF was sent. This queue contains raw (un-parsed) data which is taken, by the parser, as required. Commands (and queries) are executed in order and the parser will not start a new command until any previous command or query is complete. RS232 responses to commands or queries are sent immediately; there is no output queue.

USB input conforms with USB 2.0 Full Speed.

LAN input to the instrument is buffered in a 1500 byte input queue which is filled, under interrupt, in a manner transparent to all other instrument operations. LAN interface conforms with 1.4 LXI (LAN eXtensions for Instrumentation) Core 2011.

Commands must be sent as specified in the commands list and must be terminated with the command terminator code 0AH (Line Feed, LF). Commands may be sent in groups with individual commands separated from each other by the code 3BH (;). The group must be terminated with command terminator 0AH (Line Feed, LF).

Responses from the instrument to the controller are sent as specified in the commands list. Each response is terminated by a <RESPONSE MESSAGE TERMINATOR> which is 0DH (Carriage Return, CR) followed by 0AH (Line Feed, LF).

<WHITE SPACE> is defined as character codes 00H to 20H inclusive.

<WHITE SPACE> is ignored except in command identifiers. e.g. '*C LS' is not equivalent to '*CLS'.

The high bit of all characters is ignored.

The commands are case insensitive.

GPIB Remote Command Formats (optional)

GPIB input (optional) to the instrument is buffered in a 256-byte input queue which is filled, under interrupt, in a manner transparent to all other instrument operations. The queue contains raw (un-parsed) data, which is taken, by the parser, as required. Commands (and queries) are executed in order and the parser will not start a new command until any previous command or query is complete. There is no output queue which means that the response formatter will wait, indefinitely, if necessary, until the instrument is addressed to talk and the complete response message has been sent, before the parser is allowed to start the next command in the input queue.

Commands are sent as <PROGRAM MESSAGES> by the controller, each message consisting of zero or more <PROGRAM MESSAGE UNIT> elements separated by <PROGRAM MESSAGE UNIT SEPARATOR> elements.

A <PROGRAM MESSAGE UNIT> is any of the commands in the remote commands list.

A <PROGRAM MESSAGE UNIT SEPARATOR> is the semi-colon character ';' (3BH).

<PROGRAM MESSAGES> are separated by <PROGRAM MESSAGE TERMINATOR> elements which may be any of the following:

NL	The new line character (0AH)
NL^END	The new line character with the END message
^END	The END message with the last character of the message

Responses from the instrument to the controller are sent as <RESPONSE MESSAGES>. A <RESPONSE MESSAGE> consists of one <RESPONSE MESSAGE UNIT> followed by a <RESPONSE MESSAGE TERMINATOR>.

A <RESPONSE MESSAGE TERMINATOR> is the new line character with the END message NL^END.

Each query produces a specific <RESPONSE MESSAGE> which is listed along with the command in the remote commands list.

<WHITE SPACE> is ignored except in command identifiers. e.g. '*C LS' is not equivalent to '*CLS'. <WHITE SPACE> is defined as character codes 00H to 20H inclusive with the exception of the NL character (0AH).

The high bit of all characters is ignored. The commands are case insensitive.

Command List

This section lists all commands and queries implemented in this instrument.

Note that there are no dependent parameters, coupled parameters, overlapping commands, expression program data elements or compound command program headers; each command is completely executed before the next command is started. All commands are sequential and the operation complete message is generated immediately after execution in all cases.

The following nomenclature is used:

<RMT>	<RESPONSE MESSAGE TERMINATOR>
<NRF>	A number in any format. e.g. 12, 12·00, 1·2 e1 and 120 e-1 are all accepted as the number 12. Any number, when received, is converted to the required precision consistent with the use then rounded to obtain the value of the command.
<NR1>	A number with no fractional part, i.e. an integer.
<NR2>	A number in fixed point format e.g. 11·52, 0·78 etc.
<N>	The number of the output (1, 2, etc) or associated status register to which the command relates. For this single output instrument <N> is always '1', so the commands are, for example, V1 <NRF>, I1O?, etc. This is to keep the command format entirely compatible with that used on multi-output TTi programmable power supplies; a dual output supply, for example, would have a duplicate set of commands V2<NRF>, I2O?, etc.
<CPD>	<CHARACTER PROGRAM DATA>
<CRD>	<CHARACTER RESPONSE DATA>

The commands which begin with a ***** are implemented as specified by IEEE Std 488.2 as Common commands. All will function when used on the other interfaces but some may be of little use.

Instrument Specific Commands

For commands specified as 'WITH VERIFY' the operation is completed when the parameter being adjusted reaches the required value to within ±5% or ±10 counts, whichever is the greater. If the value fails to settle within these limits within 5 seconds then the Verify Timeout bit (bit 3) is set in the Standard Event Status Register and the operation is completed at the end of the timeout period.

The Operation Complete bit (bit 0) in the Standard Event Status Register is only ever set by the *OPC command. The *OPC (or the *OPC?) command can be used for device synchronisation due to the sequential nature of remote operations.

V<N> <NRF>	Set output <N> to <NRF> Volts
V<N>V <NRF>	Set output <N> to <NRF> Volts with verify
OVP<N> <NRF>	Set output <N> over voltage protection trip point to <NRF> Volts
I<N> <NRF>	Set output <N> current limit to <NRF> Amps
OCP<N> <NRF>	Set output <N> over current protection trip point to <NRF> Amps
V<N>?	Returns the set voltage of output <N> The response is V <N> <NR2><RMT> where <NR2> is in Volts
I<N>?	Returns the set current limit of output <N> The response is I <N> <NR2><RMT> where <NR2> is in Amps

OVP<N>?	Returns the voltage trip setting for output <N> The response is VP<N> <NR2><RMT> where <NR2> is in Volts
OCP<N>?	Returns the current trip setting for output <N> The response is CP<N> <NR2><RMT> where <NR2> is in Amps
V<N>O?	Returns the output readback voltage for output <N> The response is <NR2>V<RMT> where <NR2> is in Volts
I<N>O?	Returns the output readback current for output <N> The response is <NR2>A<RMT> where <NR2> is in Amps
DELTAV<N> <NRF>	Set the output <N> voltage step size to <NRF> Volts
DELTAI<N> <NRF>	Set the output <N> current step size to <NRF> Amps
DELTAV<N>?	Returns the output <N> voltage step size The response is DELTAV<N> <NR2><RMT> where <NR2> is in Volts.
DELTAI<N>?	Returns the output <N> current step size The response is DELTAI<N> <NR2><RMT> where <NR2> is in Amps.
INCV<N>	Increment the output <N> voltage by the step size set for output <N>
INCV<N>V	Increment the output <N> voltage by the step size set for output <N> and verify.
DECV<N>	Decrement the output <N> voltage by the step size set for output <N>
DECV<N>V	Decrement the output <N> voltage by the step size set for output <N> and verify
INCI<N>	Increment the output <N> current limit by the step size set for output <N>
DECI<N>	decrement the output <N> current limit by the step size set for output <N>
OP<N> <NRF>	set output <N> on/off where <NRF> has the following meaning: 0=OFF, 1=ON
OP<N>?	Returns output <N> on/off status. The response is <NR1><RMT> where 1 = ON, 0 = OFF.
TRIPRST	Attempt to clear all trip conditions.
LSR<N>?	Query and clear Limit Event Status Register <N>. The response is <NR1><RMT>. See Status Reporting section for details.
LSE<N> <NRF>	Set the value of LSE<N>, Limit Event Status Enable Register <N>, to <NRF>
LSE<N>?	Return the value of LSE<N>, Limit Event Status Enable Register <N> - response is <NR1><RMT>
SAV<N> <NRF>	Save the current set-up of output <N> to the set-up store specified by <NRF> where <NRF> can be 0-9.
RCL<N> <NRF>	Recall a set up for output <N> from the set-up store specified by <NRF> where <NRF> can be 0-9.

System and Status Commands

*CLS	Clear Status. Clears the Status structure. This indirectly clears the Status Byte Register.
EER?	Query and clear Execution Error Register. The response format is nr1<RMT>.
*ESE <NRF> *ESE?	Set the Standard Event Status Enable Register to the value of <NRF> Returns the value in the Standard Event Status Enable Register in <NR1> numeric format. The syntax of the response is <NR1><RMT>

*ESR?	Returns the value in the Standard Event Status Register in <NR1> numeric format. The register is then cleared. The response is <NR1><RMT>. See Status Reporting section for details.
*IST?	Returns **ist** local message as defined by IEEE Std. 488.2. The syntax of the response is 0<RMT>, if the local message is false, or 1<RMT>, if the local message is true.
*OPC	Sets the Operation Complete bit (bit 0) in the Standard Event Status Register. This will happen immediately the command is executed because of the sequential nature of all operations.
*OPC?	Query Operation Complete status. The response is always 1<RMT> and will be available immediately the command is executed because all commands are sequential.
*PRE <NRF>	Set the Parallel Poll Enable Register to the value <NRF>.
*PRE?	Returns the value in the Parallel Poll Enable Register in <NR1> numeric format. The syntax of the response is <NR1><RMT>
QER?	Query and clear Query Error Register. The response format is nr1<RMT>
*RST	Resets the instrument to the remote control default settings with the exception of all remote interface settings and Output state at power-on setting. (see Remote Operation Defaults paragraph in the Remote Interface Operation section)
*SRE <NRF>	Set the Service Request Enable Register to <NRF>.
*SRE?	Returns the value of the Service Request Enable Register in <NR1> numeric format. The syntax of the response is<NR1><RMT>
*STB?	Returns the value of the Status Byte Register in <NR1> numeric format. The syntax of the response is<NR1><RMT>
*WAI	Wait for Operation Complete true. As all commands are completely executed before the next is started this command takes no additional action.

Interface Management Commands

LOCAL	Go to local. This does not release any active interface lock so that the lock remains with the selected interface when the next remote command is received.
IFLOCK	Request Instrument 'lock'. This command requests exclusive access control of the instrument. The response is '1' is successful or '-1' if the lock is un-available either because it is already in use or the user has disabled this interface from taking control using the web interface
IFLOCK?	Query the status of the interface 'lock'. The return value is '1' if the lock is owned by the requesting interface instance; '0' if there is no active lock or '-1' if the lock is unavailable either because it is in use by another interface or the user has disabled the interface from taking control via the web interface.
IFUNLOCK	Release the 'lock' if possible. Returns '0' if successful. If this command is unsuccessful '-1' is returned, 200 is placed in the Execution Error Register and bit 4 of the Event Status Register is set indicating that you do not have the authority to release the lock.
ADDRESS?	Returns the bus address <NR1><RMT>. This number can be used to identify the unit

IPADDR?	Returns the present IP address of the LAN interface, provided it is connected. If it is not connected, the response will be the static IP if configured to always use that static IP, otherwise it will be 0.0.0.0 if waiting for DHCP or Auto-IP. The response is nnn.nnn.nnn.nnn<RMT>, where each nnn is 0 to 255.
NETMASK?	Returns the present netmask of the LAN interface, provided it is connected. The response is nnn.nnn.nnn.nnn<RMT>, where each nnn is 0 to 255.
NETCONFIG?	Returns the first means by which an IP address will be sought. The response is <CRD><RMT> where <CRD> is DHCP, AUTO or STATIC.

The following commands specify the parameters to be used by the LAN interface. **Note:** a power cycle is required after these commands are sent before the new settings are used (or returned in response to the queries listed above). The instrument does not attempt to check the validity of the IP address or netmask in any way other than checking that each part fits in 8 bits. The rear panel LAN RESET switch will override these commands and restore the defaults as described earlier.

NETCONFIG <CPD>	Specifies the means by which an IP address will be sought. <CPD> must be one of DHCP, AUTO or STATIC.
IPADDR <quad>	Sets the potential static IP address of the LAN interface (as on the webpage). The parameter must be strictly a dotted quad for the IP address, with each address part an <NR1> in the range 0 to 255, (e.g. 192.168.1.101).
NETMASK <quad>	Sets the netmask to accompany the static IP address of the LAN interface. The parameter must be strictly a dotted quad for the netmask, with each part an <NR1> in the range 0 to 255, (e.g. 255.255.255.0).

Miscellaneous Commands

*IDN?	Returns the instrument identification. The exact response is determined by the instrument configuration and is of the form <NAME>,<model>, 0, <version><RMT> where <NAME> is the manufacturer's name, <model> defines the type of instrument and <version> is the revision level of the software installed.
*TST?	The PSU has no self-test capability and the response is always 0 <RMT>.
*TRG	The PSU has no trigger capability. The command is ignored in this instrument.

Error Messages

Each error message has a number; only this number is reported via the remote control interfaces. Error message numbers are not displayed but are placed in the Execution Error Register where they can be read via the remote interfaces, see Status Reporting section.

The Manufacturers or their agents overseas will provide repair for any unit developing a fault. Where owner wish to undertake their own maintenance work, this should only be done by skilled personnel in conjunction with the service manual which may be purchased directly from the Manufacturers or their agents overseas.

Fuse

The correct fuse type is:

10 Amp 250V HBC time-lag, 5 x 20mm

Make sure that only fuses of the required rated current and specified type are used for replacement. The use of makeshift fuses and the short-circuiting of fuse-holders is prohibited.

Important Note: The main function of the fuse is to make the instrument safe and limit damage in the event of failure of one of the switching devices. If the fuse fails it is therefore very likely that the replacement will also blow, because the supply has developed a fault; in such circumstances the instrument will need to be returned to the manufacturer for service.

If replacing the fuse is considered appropriate, proceed as follows:

1. Ensure that the instrument is disconnected from the AC supply.
2. Remove the two plastic push-rivets at each side edge of the top cover. Use the blade of a small screwdriver to first ease out the rivet head and then fully remove the rivet body. Remove the three rear panel screws securing the top cover; slide the cover back and lift off.
3. Remove the plastic push-rivets at each side of the fan mounting bracket. Turn the instrument on to its side and remove the two screws on the base of the instrument (just beside the ventilation holes) that secure the fan mounting bracket to the chassis. Unplug the fan cable assembly from the Main PCB. Carefully remove the fan and mounting bracket, this may require the connection assembly between the Interface PCB and control PCB to be removed (CPX400SP only).
4. Undo the two nuts securing the orange and black wires (from the Power PCB) to the Main PCB studs and disconnect the wires. Unplug the 9-way connector of the Control PCB to Power PCB cable assembly from the Control PCB. Undo the two M4 nuts and bolts securing the top edge of the Power PCB to the chassis side, taking care not to lose the spacers, then remove the two M3 screws towards the centre of the PCB. Carefully lift the board assembly out, keeping the board level so as to avoid bending the connecting pins.
5. The fuse is situated at the rear of the instrument, on the Main PCB assembly. Replace the fuse with one of the correct type.
6. To reassemble the instrument, repeat the above procedure in the reverse order. Take great care when inserting the power board assembly back into the instrument. There are two 8 way headers on the Main board assembly next to the fuse that plug into complementary sockets on the Power PCB assembly. To ensure that these align correctly, view the connection through the aperture in the side of the chassis.

Cleaning

If the instrument requires cleaning use a cloth that is only lightly dampened with water or a mild detergent.

WARNING! TO AVOID ELECTRIC SHOCK, OR DAMAGE TO THE INSTRUMENT, NEVER ALLOW WATER TO GET INSIDE THE CASE. TO AVOID DAMAGE TO THE CASE NEVER CLEAN WITH SOLVENTS.

Web link

For the latest version of this instruction manual, IVI driver and any applicable firmware updates go to http://www.aimtti.com/support.



Thurlby Thandar Instruments Ltd.

Glebe Road • Huntingdon • Cambridgeshire • PE29 7DR • England (United Kingdom)

Telephone: +44 (0)1480 412451 • Fax: +44 (0)1480 450409

International web site: www.aimtti.com • UK web site: www.aimtti.co.uk • USA web site: www.aimtti.us

Email: info@aimtti.com