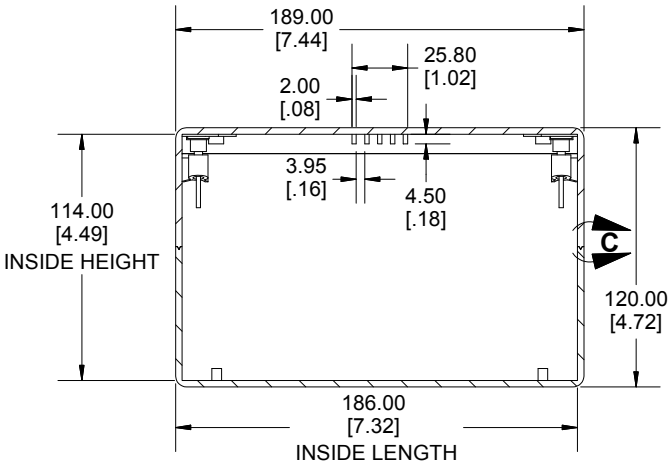

SECTION A-A
SIDE VIEW

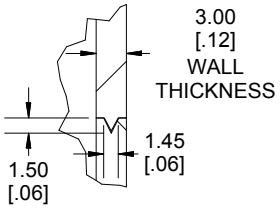

DETAIL C
GROOVE

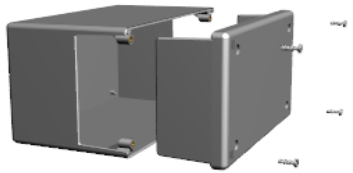

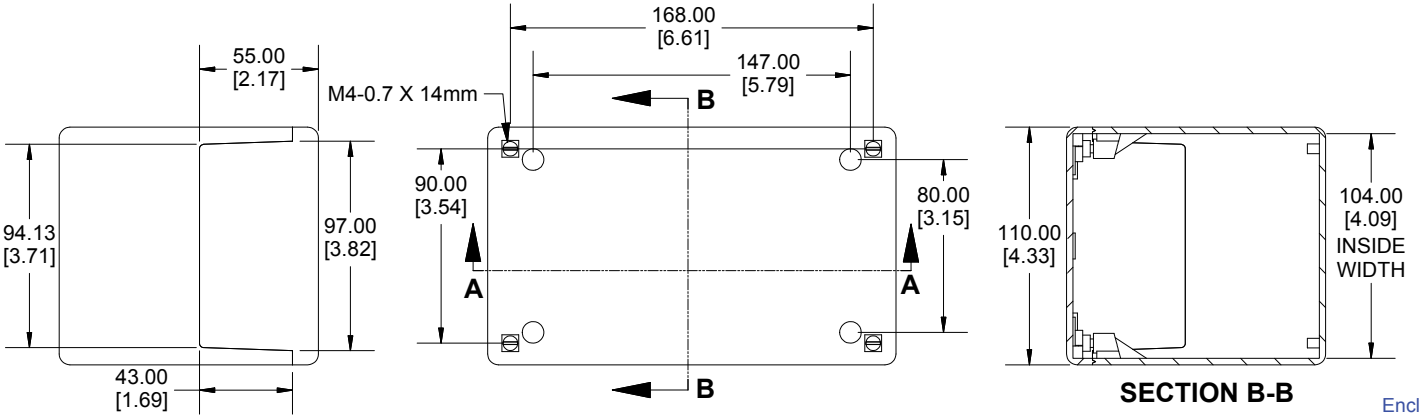

SECTION B-B

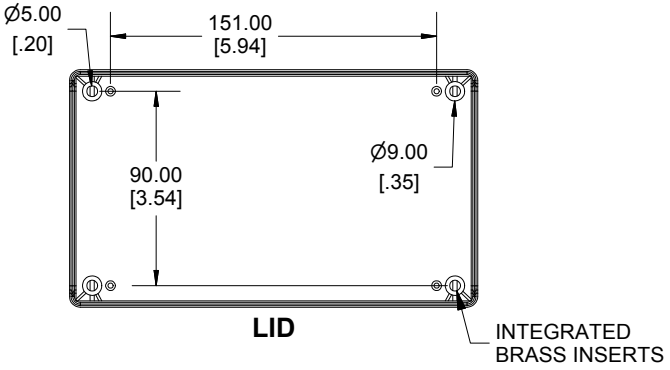

LID

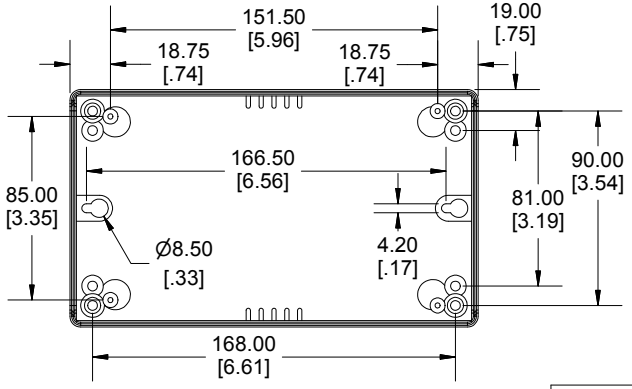

BOX

Dimensions:
mm
[inches]

Enclosures can be Factory Modified (Milling, Drilling, Printing etc.)
Contact Factory mjm@hammondmfg.com for quotes
Solid models of this enclosure available in STEP or IGES.

NOTE
Purchased assembly includes box, lid,4 cover screws, and 4 P.C. board screws.
Recommended Cover Screw Torque -- 2.5 lbf-in (30 cN-m)

MB1811	
MB1811 RegularEnclosure	
Lid smooth light gray (RAL 7035)	MB181112
Bottom smooth dark gray (RAL 7012)	

HAMMOND MANUFACTURING™

MB181112

www.hammondmfg.com