OGH501

Diffuse reflection sensor with background suppression

OGH-FPKG/2M

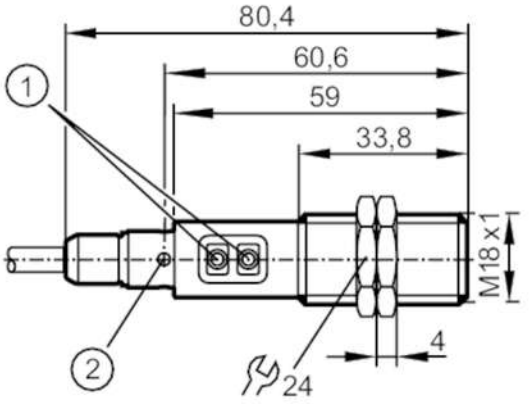

1 programming buttons
2 LED 4 x 90°

Product characteristics		
Type of light		red light
Housing		threaded type
Application		
Special feature		Background suppression
Function principle		Diffuse reflection sensor
Electrical data		
Operating voltage	[V]	10...36 DC
Current consumption	[mA]	25
Protection class		II
Reverse polarity protection		yes
Type of light		red light
Wave length	[nm]	624
Outputs		
Electrical design		PNP
Output function		light-on/dark-on mode; (programmable)
Max. voltage drop switching output DC	[V]	2.5
Permanent current rating of switching output DC	[mA]	150; (200 (...60 °C))
Switching frequency DC	[Hz]	1000
Short-circuit protection		yes
Type of short-circuit protection		pulsed
Overload protection		yes
Detection zone		
Range	[mm]	15...300; (white paper 200 x 200 mm 90% remission)
Range on white object (90 % remission)	[mm]	15...300

OGH501

Diffuse reflection sensor with background suppression

OGH-FPKG/2M

Range on grey object (18 % remission)	[mm]	15...290	
Range on black object (6 % remission)	[mm]	15...190	
Factory setting		light-on mode	
Range adjustable		yes	
Max. light spot diameter	[mm]	25	
Light spot dimensions refer to		at maximum range	
Background suppression available		yes	
Operating conditions			
Ambient temperature	[°C]	-25...80	
Protection		IP 67	
Tests / approvals			
EMC		EN 60947-5-2	
MTTF	[years]	362	
Mechanical data			
Weight	[g]	124.7	
Housing		threaded type	
Dimensions	[mm]	M18 x 1 / L = 80.4	
Thread designation		M18 x 1	
Materials		stainless steel (316L/1.4404); PA; LCP; EPDM; TPU	
Lens material		PMMA	
Displays / operating elements			
Display		switching status	1 x LED, yellow
Teach function		yes	
Electronic lock		yes	
Accessories			
Items supplied		lock nuts: 2	
Remarks			
Remarks		operating voltage "supply class 2" according to cULus	
Pack quantity		1 pcs.	

OGH501

Diffuse reflection sensor with background suppression

OGH-FPKG/2M

Electrical connection

Cable: 2 m, PUR; 3 x 0.34 mm²

Connection

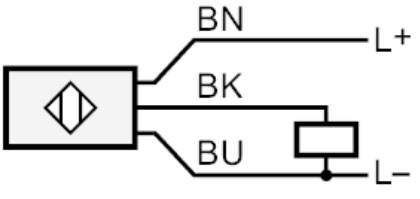

	Core colours :
BK =	black
BN =	brown
BU =	blue

Diagrams and graphs

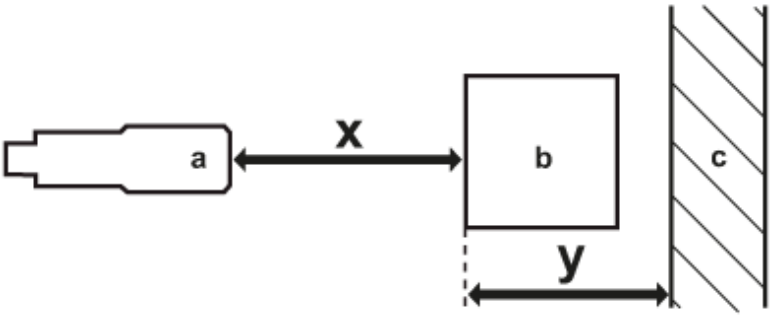

a: sensor
b: object
c: background
x: distance sensor/object [mm]
y: min. distance object/background [mm]

OGH501

Diffuse reflection sensor with background suppression

OGH-FPKG/2M

accuracy graph

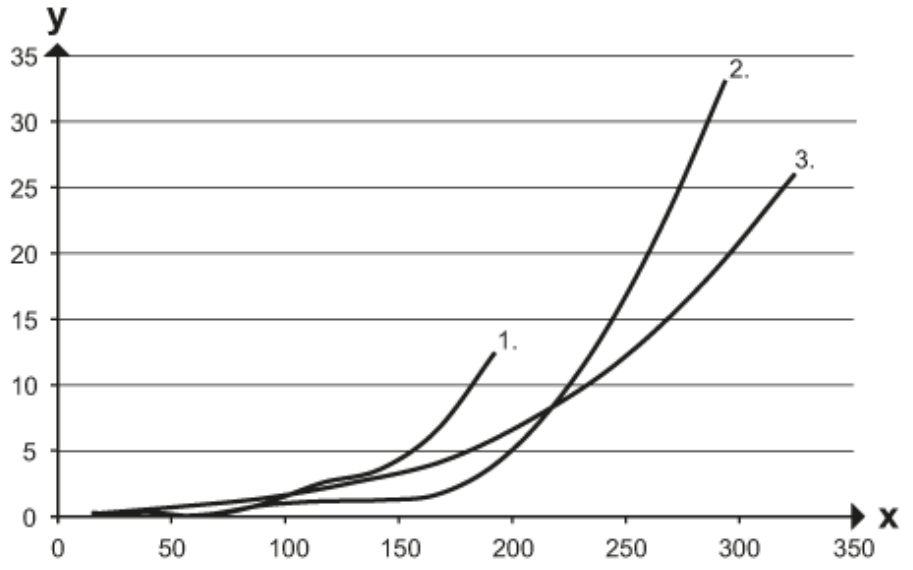

x: distance sensor/object [mm]

y: min. distance object/background [mm]

1 = object black (6 % remission) , background white (90 % remission)

2 = object grey (18 % remission) , background white (90 % remission)

3 = object white (90 % remission) , background white (90 % remission)