SP Industrial
Reliable Embedded Partner

Datasheet

Industrial M.2 2280 NVMe Gen4x4 SSD

MEC3M0E Series



All trademarks, brands and names are the property of their respective owners.
© SILICON POWER Computer & Communications, Inc., All Rights Reserved.

Specifications Overview

- **Capacity**
  - 128GB, 256GB, 512GB, 1TB, 2TB
- **Form Factor**
  - M.2 2280
- **PCIe Interface**
  - PCIe Gen4x4
  - NVMe 2.0
- **Performance**
  - Sequential Read: up to 7080 MB/s
  - Sequential Write: up to 6620 MB/s
- **Temperature Range**
  - Operation temperature:
    Normal Temperature: -20°C ~ 75°C
    Wide Temperature: -40°C ~ 85°C
- **Power Consumption**
  - Supply Voltage: DC +3.3V ± 5%
  - Read (Max.): 1670 mA
  - Write (Max.): 1520 mA
  - Idle (Avg.): 250 mA
- **Reliability**
  - TBW:
    128GB: 321 TB
    256GB: 642 TB
    512GB: 1,284 TB
    1TB: 2,569 TB
    2TB: 5,137 TB
  - MTBF: > 3,000,000 hrs.
- **ECC Performance**
  - LDPC ECC
- **Environment Specification**
  - Shock
  - Vibration
- **Compliant Specifications**
  - RoHS
- **Feature Support**
  - TCG Opal 2.0
  - AES 256
  - Write Protect
  - Quick Erase

RESTRICTIONS OF DATASHEET USE

- This document is proprietary, confidential, and intended solely for the recipient. No part of this document may be disclosed in any manner to a third party or reproduced without the prior written consent of Silicon Power. No implied, by estoppel or otherwise, to any intellectual property rights is granted by this document.
- Except as provided in any term and conditions, and/or any agreements in written by Silicon Power, Silicon Power assumes no responsibility whatever, including but not limited to, indirect, consequential, special, punitive, incidental damages, loss, loss of profits, loss of opportunities, business interruption and data. Silicon Power disclaims any express or implies warranty and conditions related to sale, use of product, or information, including warranty or conditions of merchantability, fitness for a particular purpose, accuracy of information or non-infringement.
- Moreover, Silicon Power may reserve the right to make change to the information of this document at any time without notice.

Table of Contents

Specifications Overview....1
RESTRICTIONS OF DATASHEET USE....2
List of Figures....4
List of Table....4
1. Product Description....6
1.1 Overview....6
1.2 Features....6
1.3 System Requirements....6
2. Specification....7
2.1 Physical Dimension....7
2.1.1 Dimension....7
2.1.2 Weight....7
2.2 Electrical Specifications....8
2.2.1 Operating Condition....8
2.2.2 LED Signal Definitions....8
2.3 Performance....9
2.3.1 Transfer Modes....9
2.3.2 TeraBytes Written....9
2.3.3 Wear-Leveling....9
2.4 Environmental Conditions....10
2.5 Reliability....10
2.6 Compliance Specifications....10
2.7 Technique....11
2.7.1 TCG Opal 2.0....11
2.7.2 Thermal Throttling....11
2.7.3 Write Protect....11
2.7.4 Quick Erase....11
2.7.5 Power Shield....11
2.7.6 pSLC....12
2.7.7 SLC Cache....12
2.7.8 Bad Block Management....12
2.7.9 Garbage Collection....12
2.7.10 Over Provisioning....12
2.7.11 Wear Leveling....12
3. Functional Description....13
3.1 Architecture....13
3.2 Signal Assignment....13
3.3 NVMe Command List....16
3.4 Device Identification....19
3.5 SMART Attribute (NVMe 1.4)....21

4. Ordering Information 22
4.1 Part Number Definition 22
4.2 Ordering Information Table 22
4.3 Appendix 24

List of Figures

Figure 1: Dimensions 7
Figure 2: LED Indicator 8
Figure 3: Block Diagram 13
Figure 4: Signal Connector 13

List of Table

Table 1: Physical Dimension 7
Table 2: Power Consumption 8
Table 3: TBW Data 9
Table 4: Environmental Conditions 10
Table 5: Reliability 10
Table 6: Connector Pin Definitions 14
Table 7: Admin Commands 16
Table 8: NVM Commands 16
Table 9: Set Feature Commands 17
Table 10: Get Log Page Commands 17
Table 11: NVMe Commands 18
Table 12: Identify Device Information 19
Table 13: SMART Attributes 21
Table 14: Part Number Definition 22
Table 15: Ordering information 22
Table 16: Abbreviation 24

Revision History

Revision	Date	Description
1.0	2023/11/22	First Release
1.1	2023/12/29	Add Wide Temperature Grade Product
1.2	2024/03/05	Add 1TB And 2TB Wide Temperature Product
1.3	2024/03/25	Change Datasheet Format
1.4	2024/05/17	Update The Approved BOM-Code
1.5	2024/08/26	Add 040TIMEC3M5EV0-010
1.6	2024/10/24	Update Temperature Information
1.7	2025/01/23	Remove 4TB Correct TBW
1.8	2025/06/30	Update TBW Update Compliance Specifications
1.9	2025/11/26	Update Datasheet Format
2.0	2026/01/20	Update Specifications Overview, Ordering Information & Add BiCS8 BOM Code
2.1	2026/02/26	Update Ordering Information

1. Product Description

1.1 Overview

Silicon Power Industrial's PCIe NVMe solid-state drive is a storage solution built on 3D NAND flash memory technology. The SSD employs an optimized wear-leveling algorithm to effectively extend its lifespan. Additionally, it ensures End-to-End Data Protection to safeguard data in transit, minimizing the risk of corruption, maintaining data integrity, and delivering reliable and secure storage solutions for users.

1.2 Features

- M.2 2280 form factor
- PCI Express Base Specification Revision 4 standard with Gen4x4 8GB/s bandwidth, M key
- NVME 2.0 command protocol
- Power shielding firmware architecture
- End-to-End data protection
- Garbage collection and TRIM Data Set Management command
- Global wear-leveling algorithm balances program/erase cycles
- Early weak block retirement
- Support SMART Toolbox for Windows and Linux
- Built-in dynamic temperature sensor with Thermal Throttling
- Dynamic SLC architecture
- Supports ASPM, L1.2
- AES 256 bit Hardware Self Encryption
- Trusted Computing Group (TCG) Opal protocol 2.0
- Support Hardware Write Protect (Optional)
- Support Hardware Quick Erase (Optional)
- Conformal Coating - Standard IPC A-610E (Optional)

1.3 System Requirements

- Gen4x4 interface, in M.2 2280 standard form factor
- Voltage: DC +3.3V ± 5%
- Operating System:
  -Windows
  -Linux

2. Specification

2.1 Physical Dimension

2.1.1 Dimension

The dimensions of M.2 2280 PCIe Gen4x4 SSD are illustrated in Figure 1 and described in Table 1

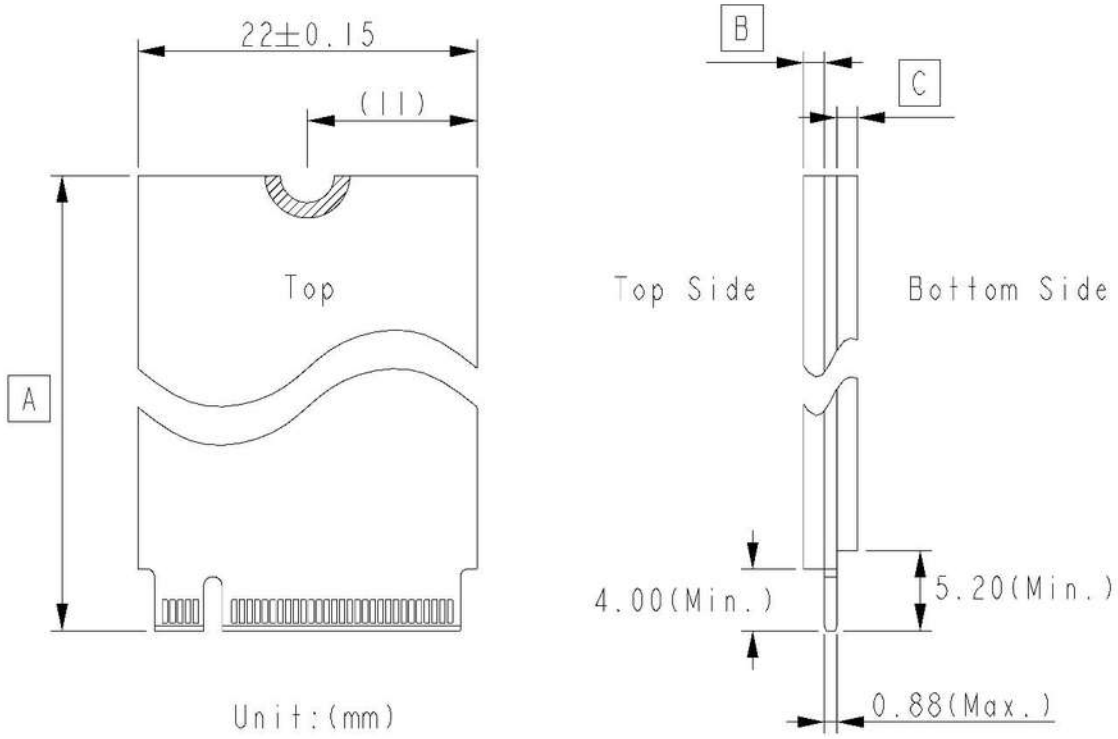

Profile	A (mm)	B (max)	C (max)
S2	80.0 ± 0.15	1.35	0.00

Figure 1: Dimensions

Table 1: Physical Dimension

Parameter	Dimension
Length	80 ± 0.15mm
Width	22 ± 0.15mm
Thickness (connector)	2.23mm

2.1.2 Weight

- Weight:
  128GB: 5.2g±5%
  256GB: 5.5g±5%
  512GB: 6.5g±5%
  1TB: 6.5g±5%
  2TB: 6.5g±5%

2.2 Electrical Specifications

2.2.1 Operating Condition

- Supply Voltage: DC +3.3V ± 5%

Table 2: Power Consumption

Mode	Power Consumption					Unit
	128GB	256GB	512GB	1TB	2TB	
Read (Max.)	680	980	1280	1650	1650	mA
Write (Max.)	570	720	1050	1500	1500	mA
Idle (Avg.)	<220	< 220	< 220	< 220	<220	mA

Notice: The value is various bases on the capacity and the test platform.
Notice: Power consumption is measured during the sequential read and write operations performed by CrystalDiskMark5.5.0.
Notice: Power consumption of Idle is measured when the platform gets into a steady-state mode after IOMeter runs "Idle" script for 10mins.
※ Testing Platform: Mother-Board: ASUS Z690-A, CPU: Intel(R) Core i5-12500K CPU 3.0GHz, Chipset: Intel Z690-A, Main Memory: DDR4-2133 8GB X 1pcs, Operating System: Win 10, 64bit, Test Temperature: 25°C

2.2.2 LED Signal Definitions

D2: Data activity to PCIe interface – to indicate the data access activity on PCIe interface.



Figure 2: LED Indicator

2.3 Performance

2.3.1 Transfer Modes

- PCIe Gen4x4, backward compatible with PCIe Gen1 & PCIe Gen2 & PCIe Gen3.

2.3.2 TeraBytes Written

Table 3: TBW Data

Mode	TBW Data					Unit
	128GB	256GB	512GB	1TB	2TB	
Client	321	642	1,284	2,569	5,137	TB

Notice: TBW is estimated by formula **TBW = (Capacity x PE Cycles) x (1 + OP) x (WLE) / (WAF)**

- **OP = (Physical Capacity / Logical Capacity) - 1**
- **WLE =** It could be different depended on the workload or usage containing data size and access rate.
- **Client workload:** Sequential write workload

2.3.3 Wear-Leveling

- Enhanced endurance by global Wear-Leveling

2.4 Environmental Conditions

Table 4: Environmental Conditions

Feature	Operating	Storage
Temperature (Normal Grade)	-20°C ~ 75°C	-55°C ~ 95°C
Temperature (Wide Grade)	-40°C ~ 85°C	-55°C ~ 95°C
Humidity	10% ~ 95% RH, non-condensing	
Vibration	20G (Peak-to-Peak), 80~2000 Hz	
Shock	1,500G, 0.5ms	

Notice:

- Vibration: Duration, 30 min x 3 axis.
- Shock: 1500G, 0.5msec, half-sine wave, 3 times in each direction, total = 18 times (6 directions).
- Temperature: The temperature reading is for the environment defined as Ta.

2.5 Reliability

Table 5: Reliability

Feature	Specification
ECC Capability	Hardware LDPC ECC engine
MTBF	3,000,000 hrs.
Program / Erase Endurance	3,000 P/E cycles
Data Endurance & Data integrity	Early weak block retirement, Global Wear leveling
Data Retention	10% of program / Erase Endurance cycles: 10 Years
	100% of program / Erase Endurance cycles: 1 Years

Notice:

- Data retention: The value is based on normal program/erase endurance at room temperature. High environmental temperature may shorten the retention period.

2.6 Compliance Specifications

- RoHS
- Reach
- CE
- FCC

2.7 Technique

2.7.1 TCG Opal 2.0

The SLC cache technology divides a cache space in the TLC device to be simulated as an SLC, and the speed in TCG/Opal stands for Trusted Computing Group Opal. The Trusted Computing Group is an organization that develops open standards for trusted computing platforms. The latest Opal Storage Specification is currently available in version 2.0, featuring a demand encryption function for the stored data so that an unauthorized person will not be able to see or access the data, even if possession of a drive was gained.

2.7.2 Thermal Throttling

SP Industrial SSD started implementing a new generation control mechanism of thermal throttling with multiple levels of temperature control. The major benefit of new generation control mechanisms avoids sudden change of SSD performance to get the better balance between performance and thermal management.

2.7.3 Write Protect

The Industrial M.2 NVMe SSD contains a feature connector for Write Protect mode. Write Protect mode is enabled when the Write Protect feature connector is placed at 1.27mm pitch Pin Header after power up or any time. During Write Protect mode, the SSD is read-only and data can’t be written to it. If no feature connector is placed, data can be written as usual.

2.7.4 Quick Erase

Reliably erasing data from storage media is a critical component of secure data management. Flash-based solid-state drives (SSDs) differ from hard drives in both the technology they use to store data (flash chips vs. magnetic disks) and the algorithms they use to manage and access that data. SSDs maintain a layer of indirection between the logical block addresses that computer systems use to access data and the raw flash addresses that identify physical storage. The layer of indirection enhances SSD performance and reliability by hiding the flash memory’s idiosyncratic interface and managing its limited lifetime. However, it can also produce copies of the data that are invisible to the user but recoverable by a sophisticated attacker. For this reason, it is so important to sanitize the media completely.

2.7.5 Power Shield

The principle of SSD is Power Shield (PS) activates when the external voltage drops to a specific low level, such as from 3.3V to 2.7V. The voltage detection circuit (Voltage Detector) inside the controller will initiate the power supply protection function. When the SSD is operating and the DRAM is powered by an external power supply, the data will be temporarily stored in the DRAM. During the power-off process, the command is sent from the host to the SSD controller to signal that the power is about to be interrupted, and the SSD controller will send confirmation messages to the host, and then transfer the data temporarily stored in the DRAM cache to the Flash Memory. This safeguards the internal firmware and data of the Flash memory from being damaged.

2.7.6 pSLC

To fill the gap between SLC and MLC/3D TLC solutions, SP Industrial offers pseudo-SLC (pSLC) Flash. It is an advanced variant of MLC/3D TLC that outperforms the latter in speed, program erase cycles, and overall reliability. Pseudo-SLC operates similar to SLC, but with fewer program erase cycles, which makes it a cost-effective alternative to SLC SP Industrial's latest Industrial SSD with pSLC solution.

2.7.7 SLC Cache

The SLC cache technology divides a cache space in the TLC device to be simulated as an SLC, and the speed in the SLC cache can be improved. But when the cache space is run out, the speed will return to the original TLC speed.

2.7.8 Bad Block Management

Bad Block Management is a mechanism for bad blocks implemented by the controller to detect and mark the bad blocks in the flash memory, and it uses reserved spare blocks to replace the bad blocks to prevent the data from being written into the bad block again. Bad Block Management improves the reliability and endurance of data access.

2.7.9 Garbage Collection

SSD uses the storage technology of flash memory (NAND flash). The principle of SSD is that the controller stores the data to be written in the Flash memory. When writing data, the SSD must first erase the data in the old block before writing new data. That is, the new data cannot directly cover the old invalid data. For SSD, Garbage Collection refers to the process of re-transferring existing data to other NAND flash locations and erasing useless data.

2.7.10 Over Provisioning

OP is a firmware technology, mainly reserved by a part of the hard disk storage capacity in the physical partition of the SSD for the controller to use as cache. Over-provisioning improves performance and increases the endurance of an SSD, helping to extend the life of a hard drive.

2.7.11 Wear Leveling

For today's NAND flash devices, the main limitation is Program/Erase lifespan (number of P/E cycles). The key solution for this constraint is to manage the attrition rate in the entire NAND flash device so that each block will be evenly distributed. Therefore, efficient management of wear in whole blocks is required in order to maximize the lifespan of a NAND flash device. To accomplish this, one method is to manage the P/E cycle of each block individually, which will help to regularly distribute them and avoid overlaying on some blocks. This method is called wear leveling.

3. Functional Description

3.1 Architecture

SILICON POWER'S M.2 2280 PCIe Gen4x4 MEC3M0E series is designed to operate and work as data or code storage device by NAND Flash memory and its controller through Standard Gen4x4 8GB/s interface to host systems.

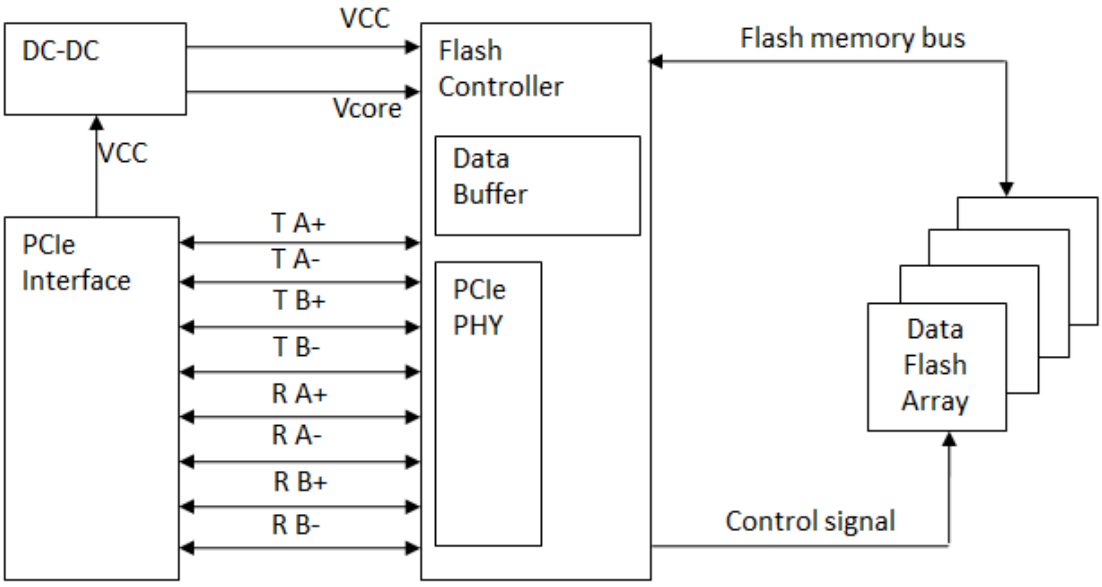

Figure 3: Block Diagram

3.2 Signal Assignment

The signals assigned for M.2 2280 PCIe applications are described in the following Table and Figure.



Front

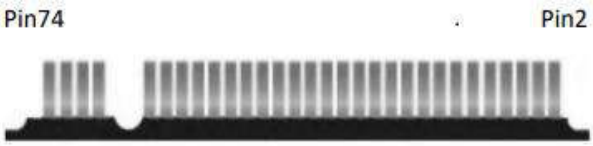

Rear

Figure 4: Signal Connector

Table 6: Pin Definitions

Name	Pin	Pin	Name
GND	01	02	+3.3V
GND	03	04	+3.3V
PETn3	05	06	NC
PETp3	07	08	NC
GND	09	10	LED1#
PERn3	11	12	+3.3V
PERp3	13	14	+3.3V
GND	15	16	+3.3V
PETn2	17	18	+3.3V
PETp2	19	20	NC
GND	21	22	NC
PERn2	23	24	NC
PERp2	25	26	NC
GND	27	28	NC
PETn1	29	30	NC
PETp1	31	32	NC
GND	33	34	NC
PERn1	35	36	NC
PERp1	37	38	NC
GND	39	40	NC
PETn0	41	42	NC
PETp0	43	44	NC
GND	45	46	NC
PERn0	47	48	NC
PERp0	49	50	PERST#
GND	51	52	CLKREQ#
REFCLKn	53	54	PEWAKE
REFCLKp	55	56	Reserved
GND	57	58	Reserved
Module Key	59	60	Module Key
Module Key	61	62	Module Key
Module Key	63	64	Module Key
Module Key	65	66	Module Key
NC	67	68	NC
PEDET	69	70	+3.3V

Name	Pin	Pin	Name
GND	71	72	+3.3V
GND	73	74	+3.3V
GND	75	N/A	N/A

3.3 NVMe Command List

Table 7: Admin Commands

Command Name	O/M	Code
Delete I/O Submission Quene	M	00h
Create I/O Submission Quene	M	01h
Get Log Page	M	02h
Delete I/O Completion Quene	M	04h
Create I/O Completion Quene	M	05h
Identify	M	06h
Abort	M	08h
Set Features	M	09h
Get Features	M	0Ah
Asynchronous Event Request	M	0Ch
Firmware Commit	O	10h
Firmware Image Download	O	11h
Device Self-test	O	14h
Format NVMe	O	80h
Security Send	O	81h
Security Receive	O	82h
Sanitize	O	84h

Notice:

- M: Must
- O: Option

Table 8: NVM Commands

Command Name	Code
Flush	00h
Write	01h
Read	02h
Write Uncorrectable	04h
Write Zeroes	08h
Dataset Management	09h
Verify	0Ch

Table 9: Set Feature Commands

Command Name	O/M	Code
Reserved	-	00h
Arbitration	M	01h
Power Management	M	02h
LBA Range Type	O	03h
Temperature Threshold	M	04h
Error Recovery	M	05h
Volatile Write Cache	O	06h
Number of Queues	M	07h
Interrupt Coalescing	M	08h
Interrupt Vector Configuration	M	09h
Write Atomicity Normal	M	0Ah
Asynchronous Event Configuration	M	0Bh
Autonomous Power State Transition	O	0Ch
Host Memory Buffer	O	ODh
Timestamp	O	0Eh
Host Controlled Thermal Management	O	10h
Non-Operational Power State Configuration	O	11h
Software Progress Marker	O	80h

Table 10: Get Log Page Commands

Command Name	O/M	Code
Reserved	-	00h
Error Information	M	01h
SMART/Health Information	M	02h
Firmware Slot Information	M	03h
Changed Namespace List	O	04h
Device Self-test	O	06h
Reserved	-	09h - 7Fh
Sanitize Status	O	81h
Reserved	-	82h - FFh

Table 11: NVMe Commands

Command Name	Code
Flush	00h
Write	01h
Read	02h
Write Uncorrectable	04h
Compare	05h
Write Zeroes	08h
Dataset Management	09h

3.4 Device Identification

The following is the device identify table.

Table 12: Identify Device Information

Bytes	O/M	Default Value	Description
01:00	M	0x1987	PCI Vendor ID (VID)
03:02	M	0x1987	PCI Subsystem Vendor ID (SSVID)
23:04	M	SN	Serial Number (SN)
63:24	M	Model Number	Model Number (MN)
71:64	M	FW Name	Firmware Revision (FR)
72	M	0x01	Recommended Arbitration Burst (RAB)
75:73	M	0	IEEE OUI Identifier (IEEE)
76	O	0x00	Controller Multi-Path I/O and Namespace Sharing Capabilities (CMIC)
77	M	0x09	Maximum Data Transfer size (MDTS)
79:78	M	0x0000	Controller ID (CNTLID)
83:80	M	0x00010200	Version (VER)
87:84	M	0x00124F80	RTD3 Resume Latency (RTD3R)
91:88	M	0x0016E360	RTD3 Entry Latency (RTD3E)
95:92	M	0	Optional Asynchronous Events Supported (OAES)
239:96	-	0	Reserved
255:240	-	0	Refer to the NVMe Management Interface Specification for definition
257:256	M	0x0007	Optional Admin Command Support (OACS)
258	M	0x03	Abort Command Limit (ACL)
259	M	0x03	Asynchronous Event Request Limit (AERL)
260	M	0x02	Firmware Updates (FRMW)
261	M	0x03	Log Page Attributes (LPA)
262	M	0x3F	Error Log Page Entires (ELPE)
263	M	0x04	Number of Power States Support (NPSS)
264	M	0x01	Admin Vendor Specific Command Configuration (AVSCC)
265	O	0x01	Autonomous Power State Transition Attribute (APSTA)
267:266	M	0x0157	Warning Composite Temperature Threshold (WCTEMP)
269:268	M	0x0193	Critical Composite Temperature Threshold (CCTEMP)
271:270	O	0x0000	Maximum Time for Firmware Activation (MTFA)
257:272	O	0	Host Memory Buffer Preferred Size (HMPRE)
279:276	O	0	Host Memory Buffer Minimum Size (HMMIN)
295:280	O	0	Total NVM Capacity (TNVMCAP)
311:296	O	0	Unallocated NVM Capacity (UNVMCAP)
315:312	O	0	Reply Protected Memory Block Support (RPMBS)
NVM Command Set Attributes			

Bytes	O/M	Default Value	Description
511:316	-	0	Reserved
512	M	0x66	Submission Quene Entry Size (SQES)
513	M	0x44	Completion Quene Entry Size (CQES)
515:514	-	0	Reserved
519:516	M	0x01	Number of Namespaces (NN)
521:520	M	0x001E	Optional NVM Command Support (ONCS)
523:522	M	0	Fused Operation Support (FUSES)
524	M	0	Format NVM Attributes (FNA)
525	M	0x01	Volatile Write Cache (VWC)
527:526	M	0x00FF	Atomic Write Unit Normal (AWUN)
529:528	M	0x00	Atomic Write Unit Power Fail (AWUPF)
530	M	0x01	NVM Vendor Specific Command Configuration (NVSCC)
531	M	0	Reserved
533:532	O	0x00	Atomic Compare & Write Unit (ACWU)
535:534	M	0	Reserved
539:536	O	0x00	SGL Support (SGLS)
703:540	M	0	Reserved
IO Command Set Attributes			
2047:704	M	0	Reserved
2048:2079	M	PSD0	Power State 0 Descriptor
2111:2080	O	PSD1	Power State 1 Descriptor
2143:2112	O	PSD2	Power State 2 Descriptor
2175:2144	O	PSD3	Power State 3 Descriptor
2207:2176	O	PSD4	Power State 4 Descriptor
…	-	0000h	(N/A)
3071:3040	O	PSD31	Power State 31 Descriptor
Vendor Specific (VS)			
4095:3072	O	Reserved	Vendor Specific (VS)

3.5 SMART Attribute (NVMe 1.4)

The following table lists the SMART attributes supported by SP Industrial PCIe NVMe SSD.

Table 13: SMART Attributes

# of Bytes	Byte Index	Description
1	0	**Critical Warning:** Error occurred if value of the bits are not zero.
2	2:1	**Composite Temperature:** Flash temp value will be detected on-board thermal sensor. (Unit: K)
1	3	**Available Spare:** Remaining spare capacity available. (Unit: %)
1	4	**Available Spare Threshold:** Spare capacity threshold. (Unit: %)
1	5	**Percentage Used:** Average of the Flash's block erase count / NAND EOL erase count. (Unit: %)
26	31:6	**Reserved**
16	47:32	**Data Units Read** (in LBAs): Contains the number of 512byte data units the host has read from the controller. This value is reported in thousands (i.e, a value of 1 corresponds to 1000 units of 512 bytes read).
16	63:48	**Data Units Written** (in LBAs): Contains the number of 512byte data units the host has written from the controller. This value is reported in thousands (i.e, a value of 1 corresponds to 1000 units of 512 bytes written).
16	79:64	**Host Read Commands:** The number of read commands completed by the controller.
16	95:80	**Host Write Commands:** The number of read commands completed by the controller.
16	111:96	**Controller Busy Time:** The amount of time the controller is busy with I/O commands.
16	127:112	**Power Cycles:** Normal power on/off cycles count.
16	143:128	**Power On Hours** (Unit: hour)
16	159:144	**Unsafe Shutdowns:** Abnormal power on/off cycles count.
16	175:160	**Media and Data Integrity Errors:** The number of occurrences where the controller detected an unrecovered data integrity error.
16	191:176	**Number of Error Information Log Entries:** The number of Error Information log entries over the life of the controller.
4	195:192	**Warning Composite Temperature Time:** The amount of time that temperature over warning threshold (85°C) but less than critical threshold (95°C). (Unit: min)
4	199:196	**Critical Composite Temperature Time:** The amount of time that temperature over critical threshold (95°C). (Unit: min)
2	201:200	**Temperature Sensor 1** (CTRL Tj) (Unit: K)
2	203:202	**Temperature Sensor 2** (N/A)
2	205:204	**Temperature Sensor 3** (N/A)
2	207:206	**Temperature Sensor 4** (N/A)
2	209:208	**Temperature Sensor 5** (N/A)
2	211:210	**Temperature Sensor 6** (N/A)
2	213:212	**Temperature Sensor 7 (N/A)**
2	215:214	**Temperature Sensor 8 (N/A)**
296	511:216	**Reserved**

4. Ordering Information

4.1 Part Number Definition

Table 14: Part Number Definition

Code	1	2	3	4	5	6	7	8	9	10	11	12	13	14	15	16
	S	P	1	2	8	G	I	M	E	C	3	M	5	E	V	0

Code 1-2: Brand	SP: Silicon Power
Code 3-6: Capacity	128G: 128GB; 256G: 256GB; 512G: 512GB; 010T: 1TB; 020T: 2TB
Code 7: Product	I: Industrial Product Line
Code 8-10: Type & Form Factor	MEC: PCIe 2280
Code 11-13: Model Series	3M5: WD (3D TLC)
Code 14: SSD Series	E: DRAM-Less
Code 15: Operation Temperature	V: Normal Temperature -20°C ~75°C W: Wide Temperature -40°C ~85°C
Code 16: Reserved	0: Standard
Code 17-18 (Option)	For Customization

4.2 Ordering Information Table

Table 15: Ordering information

Capacity	Part Number	BOM Code	Description	R/W Performance	
				Maximum (MB/s)	IOPS
Normal Temperature (-20°C ~75°C)					
128GB	SP128GIMEC3M5EV0	128GIMEC3M5EV0-010	BiCS5 1Tb*1	1550 / 860	816K / 166k
	SP128GIMEC3M5EV0	128GIMEC3M5EV0-020	BiCS5 1Tb*1	1550 / 860	816K / 166k
	SP128GIMEC3M5EV0	128GIMEC3M5EV0-040	BiCS5 1Tb*1	1550 / 860	816K / 166k
256GB	SP256GIMEC3M5EV0	256GIMEC3M5EV0-010	BiCS5 1Tb*2	3040 / 1570	816K / 373K
	SP256GIMEC3M5EV0	256GIMEC3M5EV0-030	BiCS5 1Tb*2	3040 / 1570	816K / 373K
	SP256GIMEC3M5EV0	256GIMEC3M5EV0-040	BiCS8 2Tb*1	3570 / 2320	792K / 185K
512GB	SP512GIMEC3M5EV0	512GIMEC3M5EV0-020	BiCS5 2Tb*2	4510 / 3270	816K / 634K
	SP512GIMEC3M5EV0	512GIMEC3M5EV0-030	BiCS5 2Tb*2	4510 / 3270	816K / 634K
	SP512GIMEC3M5EV0	512GIMEC3M5EV0-040	BiCS5 2Tb*2	4510 / 3270	816K / 634K
	SP512GIMEC3M5EV0	512GIMEC3M5EV0-050	BiCS8 2Tb*2	6940 / 4650	874K / 191K

Capacity	Part Number	BOM Code	Description	R/W Performance	
				Maximum (MB/s)	IOPS
1TB	SP010TIMEC3M5EV0	010TIMEC3M5EV0-010	BiCS5 2Tb*4	4660 / 4330	828K / 644K
	SP010TIMEC3M5EV0	010TIMEC3M5EV0-020	BiCS5 2Tb*4	4660 / 4330	828K / 644K
	SP010TIMEC3M5EV0	010TIMEC3M5EV0-030	BiCS5 2Tb*4	4660 / 4330	828K / 644K
	SP010TIMEC3M5EV0	010TIMEC3M5EV0-040	BiCS8 4Tb*2	7080 / 6400	806K / 197K
2TB	SP020TIMEC3M5EV0	020TIMEC3M5EV0-010	BiCS5 4Tb*4	4740 / 4320	845K / 596K
	SP020TIMEC3M5EV0	020TIMEC3M5EV0-020	BiCS5 4Tb*4	4740 / 4320	845K / 596K
	SP020TIMEC3M5EV0	020TIMEC3M5EV0-030	BiCS5 4Tb*4	4740 / 4320	845K / 596K
	SP020TIMEC3M5EV0	020TIMEC3M5EV0-040	BiCS8 4Tb*4	7080 / 6620	795K / 220K
Wide Temperature (-40°C ~85°C)					
128GB	SP128GIMEC3M5EW0	128GIMEC3M5EW0-010	BiCS5 1Tb*1	1550 / 860	816K / 166k
	SP128GIMEC3M5EW0	128GIMEC3M5EW0-030	BiCS5 1Tb*1	1550 / 860	816K / 166k
256GB	SP256GIMEC3M5EW0	256GIMEC3M5EW0-020	BiCS5 1Tb*2	3040 / 1570	816K / 373K
512GB	SP512GIMEC3M5EW0	512GIMEC3M5EW0-010	BiCS5 2Tb*2	4510 / 3270	816K / 634K
	SP512GIMEC3M5EW0	512GIMEC3M5EW0-020	BiCS5 2Tb*2	4510 / 3270	816K / 634K
1TB	SP010TIMEC3M5EW0	010TIMEC3M5EW0-010	BiCS5 2Tb*4	4660 / 4330	828K / 644K
	SP010TIMEC3M5EW0	010TIMEC3M5EW0-020	BiCS5 2Tb*4	4660 / 4330	828K / 644K
2TB	SP020TIMEC3M5EW0	020TIMEC3M5EW0-010	BiCS5 4Tb*4	4740 / 4320	845K / 596K
	SP020TIMEC3M5EW0	020TIMEC3M5EW0-020	BiCS5 4Tb*4	4740 / 4320	845K / 596K

4.3 Appendix

Table 16: Abbreviation

Item	Abbreviation	Description
1	PCIe	Peripheral Component Interconnect Express
2	NVMe	Non-Volatile Memory Express
3	Gen	Generation
4	TBW	Tera Byte Write
5	MTBF	Mean Time Between Failures
6	LDPC	Low Density Parity Check
7	RAID	Redundant Array of Independent Drives
8	ECC	Error Correction Code
9	TCG	Trusted Computing Group
10	SMART	Self-Monitoring Analysis and Reporting Technology
11	FDE	Full Disk Encryption
12	AES	Advanced Encryption Standard
13	SLC	Single-Level Cell
14	SSD	Solid State Disk
15	OP	Over Provisioning
16	PS	Power Shield
17	DC	Direct Current
18	LED	Light Emitting Diode
19	DRAM	Dynamic Random Access Memory
20	PE	Program/Erase
21	WAF	Write Amplification Factor
22	WLE	Wear Leveling Efficiency
23	Ta	Ambient Temperature
24	LBA	Logical Block Address

Contact Information

Silicon Power Computer & Communications Incorporation, a solid state memory or storage business company, provides total solutions in the design and marketing of SSD, Flash Module, and Industry Card products. For further supporting or detail information related to the products, please inform us through the following contact email address: isupport@silicon-power.com. We will response the requests soon.