6201-2Z

SKF Explorer

Dimensions

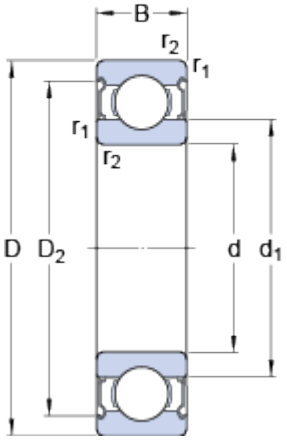

d		12	mm
D		32	mm
B		10	mm
d_1		18.45	mm
D_2		27.34	mm
$r_{1,2}$	min.	0.6	mm

Abutment dimensions

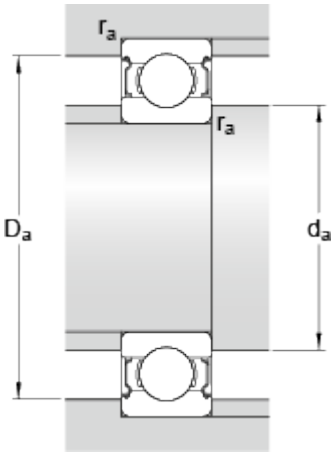

d_a	min.	16.2	mm
d_a	max.	18.4	mm
D_a	max.	27.8	mm
r_a	max.	0.6	mm

Calculation data

Basic dynamic load rating	C	7.3	kN
Basic static load rating	C_0	3.1	kN
Fatigue load limit	P_u	0.132	kN
Reference speed		50000	r/min
Limiting speed		26000	r/min
Calculation factor	k_r	0.025	
Calculation factor	f_0	12	

Mass

Mass bearing	0.0388	kg