STEAM EQUIPMENT

ADCA Pure

BALANCED PRESSURE THERMOSTATIC STEAM TRAP
Clean Steam Trap TSS 6

DESCRIPTION

The TSS 6 all stainless steel thermostatic steam traps and air eliminators are specifically designed for use in reactors, sterilizers and distribution lines in clean and pure steam systems.
The small size makes it ideal for use with a wide variety of this equipment.



MAIN FEATURES
Modulating discharge.
Wide range of connections options
Excellent air discharge.
Simple and compact design.

STANDARD SURFACE FINISH
Internal surfaces: <0,5 microns Ra
External : 0,8 microns Ra

OPTIONS: Welded body and different designs under request.

USE: Saturated steam

AVAILABLE MODELS: TSS 6

SIZES: ½", ¾", 1" and 11/2".

CONNECTIONS: Clamp ends

INSTALLATION: Vertical installation

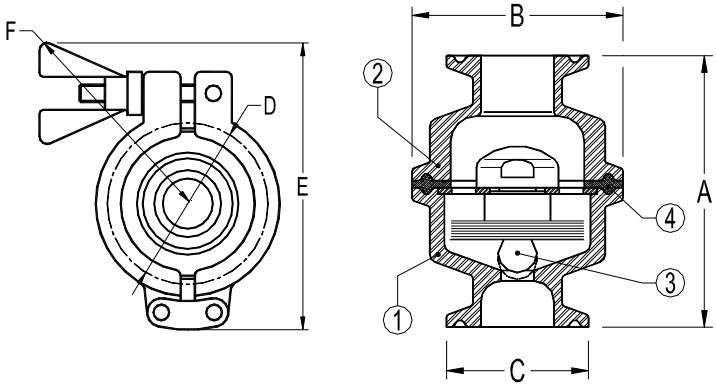

PMA	Max. allowable pressure	10 bar
TMA	Max. allowable temperature	177 ºC
PMO	Max. operating pressure	6 bar
TMO	Max. operating temperature	165 ºC

DIMENSIONS (mm)

SIZE DN	A	B	C	D	E	F	WGT. Kgs
1/2"	65	50,5	25,4	50	93	77	0,7
3/4"	65	50,5	25,4(34)	50	93	77	0,7
1"	65	50,5	50,5	50	93	77	0,8
11/2"	65	50,5	50,5	50	93	77	0,8

Dimensions based on ASME BPE clamp ends
( ) ISO 1127 alternative, others on request.

MATERIALS

POS.Nr.	DESIGNATION	MATERIAL
1	Body	AISI316L / 1.4404
2	Cover	AISI316L / 1.4404
3	* Thermostat	AISI316L / 1.4404
4	* Gasket	PTFE/TFM® Envelope gasket **
5	Clamp	Stainless steel

* Available spare parts; ** FDA Approved

FLOW RATE CAPACITY IN Kgs/h

MODEL	SIZE	DIFFERENTIAL PRESSURE (bar)								
		0,2	0,3	0,5	1	1,5	2	3	4	6
TSS6	1/2" - 11/2"	90	135	200	400	500	700	900	1000	1400
TSS6 LC	1/2" - 11/2"	60	80	90	160	210	280	490	550	760

Capacities shown refer to condensate at 5ºC below saturated steam temperature .
Capacities for cold condensate discharge at 20ºC are around two times greater.

We reserve the right to change the design and material of this product without notice.