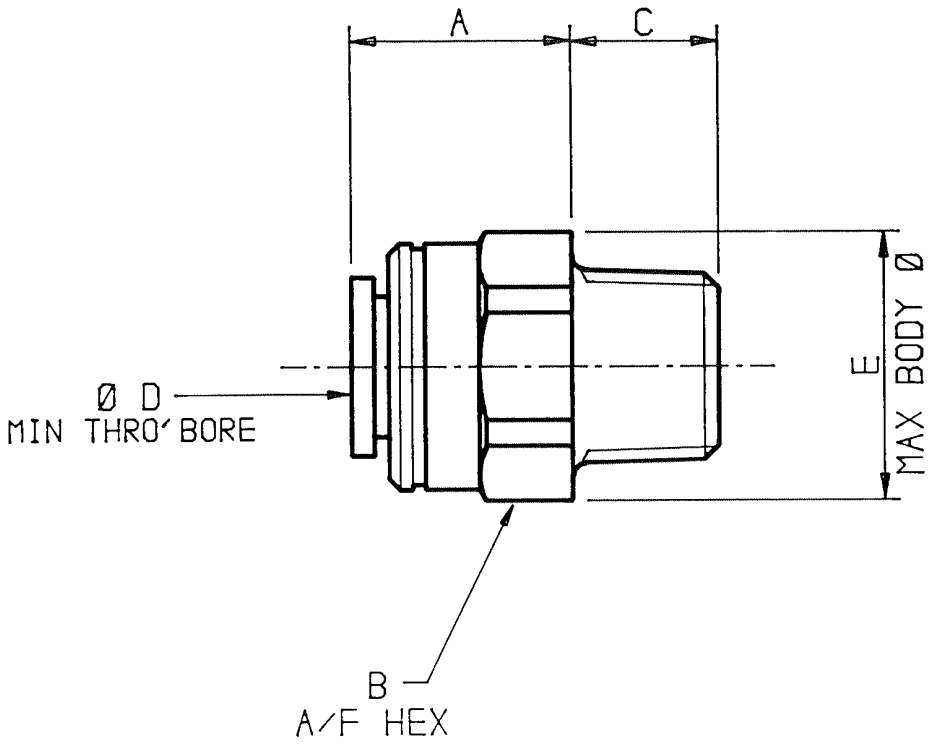

PRODUCT NO.	DESCRIPTION	A	B	C	Ø D	Ø E
PM010401E	4MM X 1/8 BSPT	15	15	10	2.5	17
PM010402E	4MM X 1/4 BSPT	14	17	11	2.5	18
PM010501E	5MM X 1/8 BSPT	15	15	10	3.5	17
PM010502E	5MM X 1/4 BSPT	14	17	11	3.5	18
PM010601E	6MM X 1/8 BSPT	18	17	10	4.0	18
PM010602E	6MM X 1/4 BSPT	14	17	11	5.0	18
PM010801E	8MM X 1/8 BSPT	19	17	10	4.0	18
PM010802E	8MM X 1/4 BSPT	14	17	11	6.0	18
PM010803E	8MM X 3/8 BSPT	14	20	13	7.0	22
PM011002E	10MM X 1/4 BSPT	21	20	11	7.0	22
PM011003E	10MM X 3/8 BSPT	17	20	13	7.0	22
PM011004E	10MM X 1/2 BSPT	15	22	16	7.5	24
PM011203E	12MM X 3/8 BSPT	27	24	13	8.5	26
PM011204E	12MM X 1/2 BSPT	18	24	16	8.5	26

ALL DIMENSIONS IN MM

John Guest

THE COPYRIGHT HEREIN BELONGS TO JOHN GUEST LIMITED. THE INFORMATION GIVEN MUST NOT BE REPRODUCED WITHOUT WRITTEN CONSENT. ©1987

PRODUCT DATA SHEET DS-157

TITLE BSPT TAPER STRAIGHT ADAPTORS (P RANGE)

ISSUE 1

DATE 03/03/87

Location: CCL-SA-SPE01
Release Number: 000000-C-FILX
CURRENT PRODUCTION
User: roses
Printed/Downloaded: 3 Mar 10,14:03
UNCONTROLLED IF PRINTED OR DOWNLOADED