Shock-Safe Fuseholder, 5 x 20 / 6.3 x 32 mm, Slotted Cap/Fingergrip, IEC: 500 VAC, UL/CSA: 600 VAC/DC



Socket with Slotted Cap
**Caps must be ordered separately (see accessories)**



Socket with Fingergrip Cap

500 VAC · 4 W / 10 A (VDE) · 600 VAC/DC · 20 A (UL/CSA)

## Description
- Fuseholder for 500 VAC applications
- Cap is available slotted or with fingergrip

## Standards
- IEC 60127-6
- UL 4248-1
- CSA 22.2 no. 4248-1

## Approvals
- VDE Certificate Number: 137910
- UL File Number: E39328

## Applications
- Equipment with three-phase supply (400 VAC)
- Industrial electronic

## Weblinks
pdf-datasheet, html-datasheet, General Product Information, Approvals, CE declaration of conformity, RoHS, CHINA-RoHS, REACH, e-Shop, SCHURTER-Stock-Check, Distributor-Stock-Check, Accessories, Detailed request for product

## Technical Data

| | |
|---|---|
| Shock-Safe Category | PC2 |
| Fuse-Link | 5 x 20 or 6.3 x 32 mm |
| Mounting | Panel Mount, Front Side |
| Mounting | Fixing Nut |
| Terminal | Solder or Quick-Connect 6.3 x 0.8 mm |
| Rated Voltage | 500 VAC (VDE), 600 VAC/DC (UL/CSA) |
| Rated current | 10 A (VDE), 20 A (UL/CSA) |
| Rated Power Acceptance IEC | 4 W / 10 A @ Ta 23 °C<br>Admissible power acceptance at higher ambient temperature see derating curves |
| Degree of Protection | IP 40 |
| Protection Class | Suitable for appliances with protection class I or II acc. to IEC 61140 |
| Admissible Ambient Air Temp. | -40 °C to 85 °C |
| Climatic Category | 40/085/21 acc. to IEC 60068-1 |
| Material: Socket | Thermoset, black, UL 94V-0 |
| Material: Terminals | Tin-Plated Copper Alloy |
| Unit Weight | 9 g / 5.36 g |
| Storage Conditions | 0 °C to 60 °C, max. 70% r.h. |
| Product Marking | ⊟, Type, Rated voltage, Power Rating, Rated current, Approvals |

| | |
|---|---|
| Soldering Methods | Iron |
| Solderability | 350 °C / 2 sec acc. to IEC 60068-2-20, Test Ta, method 2 |
| Resistance to Soldering Heat | 350 °C / 10 sec acc. to IEC 60068-2-20, Test Tb, method 2 |
| Contact Resistance | < 5 mΩ at 20 mV |
| Dielectric Strength | > 3 kV<br>> 4 kV between L/N-PE<br>(50 Hz; 1 min) |
| Impulse Withstand Voltage | > 4 kV between L-N<br>> 6 kV between L/N-PE |
| Insulation Resistance | > 10 MΩ between L-N<br>> 100 MΩ between L/N-PE<br>(500 VDC; 1 min) |
| Overvoltage Category | I - III acc. to IEC 60664-1 |
| Pollution Degree | 1 - 2 acc. to IEC 60664-1 |
| Admissible Torque on Fixing Nut | max 1.2 Nm |
| Panel Thickness s | max 9 mm |

## Dimension

56.5 mm

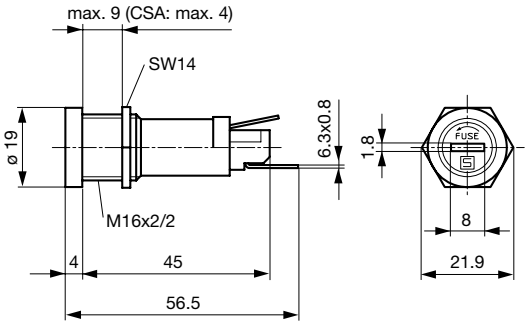


Variant with slotted cap 0031.1631 + 0031.1611/1613

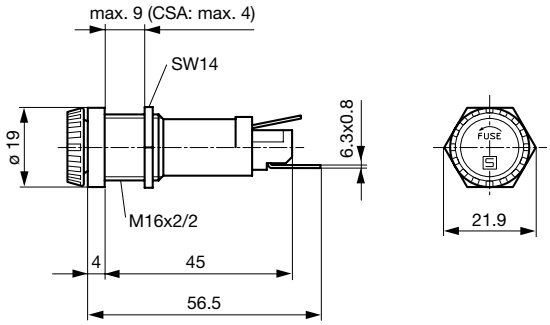


Variant Fingergrip 0031.1631 + 0031.1616

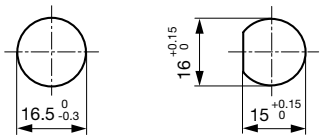


Mounting holes

## Derating Curves

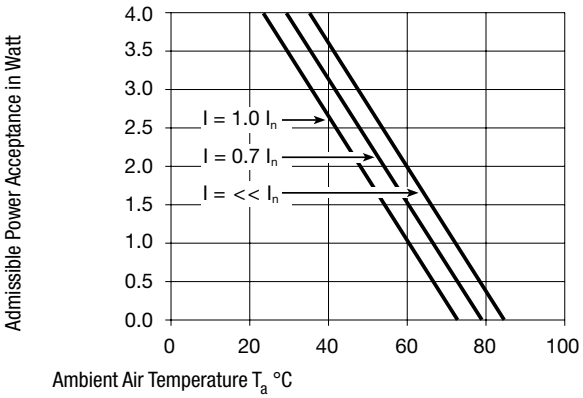


## All Variants

| Holder | Cap | Fuse-Link | Terminal | Degree of Protection | Remark | Order Number |
|---|---|---|---|---|---|---|
| ● | - | 5 x 20 or 6.3 x 32mm | Solder | IP 40 | - | 0031.1631 |
| ● | - | 5 x 20 or 6.3 x 32mm | Quick-Connect 6.3 x 0.8 mm | IP 40 | - | 0031.1623 |
| ● | slotted | 6.3 x 32mm | Quick-Connect 6.3 x 0.8 mm | IP 40 | 0031.1623 + 0031.1613 | 0031.1622 |
| ● | Fingergrip | 6.3 x 32mm | Quick-Connect 6.3 x 0.8 mm | IP 40 | 0031.1623 + 0031.1616 | 0031.1624 |
| ● | slotted | 5 x 20mm | Quick-Connect 6.3 x 0.8 mm | IP 40 | 0031.1623 + 0031.1611 | 0031.1621 |
| ● | slotted | 5 x 20mm | Solder | IP 40 | 0031.1631 + 0031.1611 | 0031.1632 |
| ● | slotted | 6.3 x 32mm | Solder | IP 40 | 0031.1631 + 0031.1613 | 0031.1633 |
| ● | Fingergrip | 6.3 x 32mm | Solder | IP 40 | 0031.1631 + 0031.1616 | 0031.1634 |

Most Popular.

Availability for all products can be searched real-time:http://www.schurter.com/en/Stock-Check/Stock-Check-SCHURTER

## Packaging Unit

Bulk (50 pcs.)

## Required Accessory



**Description**

Caps to FEC
Caps to Holder FEC

| | |
|---|---|
| slotted, 5 x 20 mm, IP 40 | 0031.1611 |
| slotted, 6.3 x 32 mm, IP 40 | 0031.1613 |
| Fingergrip, 6.3 x 32 mm, IP 40 | 0031.1616 |

15.05.2015



The specifications, descriptions and illustrations indicated in this document are based on current information. All content is subject to modifications and amendments. Information furnished is believed to be accurate and reliable. However, users should independently evaluate the suitability and test each product selected for their own applications.