

32008 X

Single row tapered roller bearing

Single row tapered roller bearings are designed to accommodate combined radial and axial loads and provide low friction during operation. The inner ring, with rollers and cage, can be mounted separately from the outer ring. These separable and interchangeable components facilitate mounting, dismounting and maintenance. By mounting one single row tapered roller bearing against another and applying a preload, a rigid bearing application can be achieved.

- High radial and axial load carrying capacity
- Accommodate axial loads in one direction
- Low friction and long service life
- Separable and interchangeable components

Overview

Dimensions

Bore diameter	40 mm
Contact angle	14.167 °
Outside diameter	68 mm
Width, bearing	19 mm
Width, outer ring	14.5 mm
Width, total	19 mm

Performance

Basic dynamic load rating	64.7 kN
Basic static load rating	71 kN
Limiting speed	9 500 r/min
Reference speed	7 500 r/min

Properties

Arrangement of contact angle (double-row bearing)	Not applicable
Bearing part	Complete bearing
Bore type	Cylindrical
Cage	Sheet metal
Coating	Without
Locating feature, bearing outer ring	None
Lubricant	None
Matched arrangement	No
Number of rows	1
Relubrication feature	Without
SKF performance class	SKF Explorer
Sealing	Without
Sealing type	Not applicable

Technical Specification

Dimension series	3CD

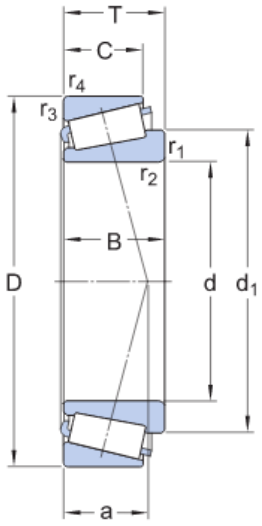

Dimensions

d	40 mm	Bore diameter
D	68 mm	Outside diameter
T	19 mm	Total width
d_1	≈ 54.7 mm	Shoulder diameter of inner ring
B	19 mm	Width of inner ring
C	14.5 mm	Width of outer ring
$r_{1,2}$	min. 1 mm	Chamfer dimension of inner ring
$r_{3,4}$	min. 1 mm	Chamfer dimension of outer ring
a	14.8 mm	Distance side face to pressure point

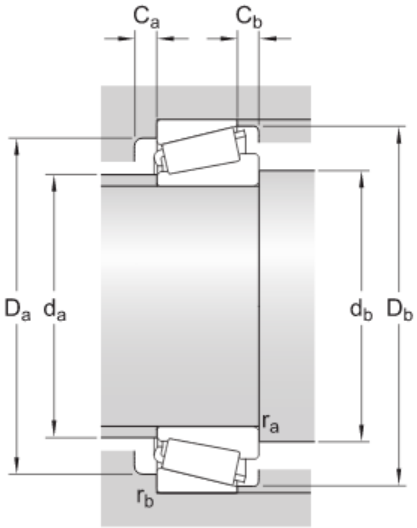

Abutment dimensions

d_a	max. 46 mm	Diameter of shaft abutment
d_b	min. 47.5 mm	Diameter of shaft abutment
D_a	min. 60 mm	Diameter of housing abutment
D_a	max. 61.5 mm	Diameter of housing abutment
D_b	min. 65 mm	Diameter of housing abutment
C_a	min. 4 mm	Minimum width of space required in housing on large side face
C_b	min. 4.5 mm	Minimum width of space required in housing on small side face
r_a	max. 1 mm	Radius of shaft fillet
r_b	max. 1	Radius of housing fillet

	mm	

Calculation data

Basic dynamic load rating	C	64.7 kN
Basic static load rating	C_0	71 kN
Fatigue load limit	P_u	7.65 kN
Reference speed		7 500 r/min
Limiting speed		9 500 r/min
Limiting value	e	0.37
Axial load factor	Y	1.6
Axial load factor	Y_0	0.9

Mass

Mass	0.28 kg

Terms and conditions

By accessing and using this website / app owned and published by AB SKF (publ.) (556007-3495 · Gothenburg) ("SKF"), you agree to the following terms and conditions:

Warranty Disclaimer and Limitation of Liability

Although every care has been taken to assure the accuracy of the information on this website / app, SKF provides this information "AS IS" and DISCLAIMS ALL WARRANTIES, EXPRESS OR IMPLIED, INCLUDING, BUT NOT LIMITED TO, IMPLIED WARRANTIES OF MERCHANTABILITY AND FITNESS FOR A PARTICULAR PURPOSE. You acknowledge that your use of this website / app is at your sole risk, that you assume full responsibility for all costs associated with use of this website / app, and that SKF shall not be liable for any direct, incidental, consequential, or indirect damages of any kind arising out of your access to, or use of the information or software made available on this website / app. Any warranties and representations in this website / app for SKF products or services that you purchase or use will be subject to the agreed upon terms and conditions in the contract for such product or service. Further, for non-SKF websites / apps that are referenced in our website / app or where a hyperlink appears, SKF makes no warranties concerning the accuracy or reliability of the information in these websites / apps and assumes no responsibility for material created or published by third parties contained therein. In addition, SKF does not warrant that this website / app or these other linked websites / apps are free from viruses or other harmful elements.

Copyright

Copyright in this website / app copyright of the information and software made available on this website / app rest with SKF or its licensors. All rights are reserved. All licensed material will reference the licensor that has granted SKF the right to use the material. The information and software made available on this website / app may not be reproduced, duplicated, copied, transferred, distributed, stored, modified, downloaded or otherwise exploited for any commercial use without the prior written approval of SKF. However, it may be reproduced, stored and downloaded for use by individuals without prior written approval of SKF. Under no circumstances may this information or software be supplied to third parties.
This website /app includes certain images used under license from Shutterstock, Inc.

Trademarks and Patents

All trademarks, brand names, and corporate logos displayed on the website / app are the property of SKF or its licensors, and may not be used in any way without prior written approval by SKF. All licensed trademarks published on this website / app reference the licensor that has granted SKF the right to use the trademark. Access to this website / app does not grant to the user any license under any patents owned by or licensed to SKF.

Changes

SKF reserves the right to make changes or additions to this website / app at any time.