34812-100 FRAME TYPE PLUG-IN UNIT EXTRUDED SIDE PANEL, 3-U, 160 MM, SYMMETRICAL



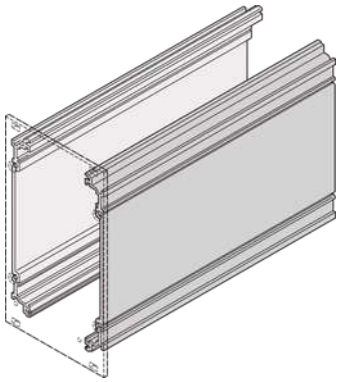

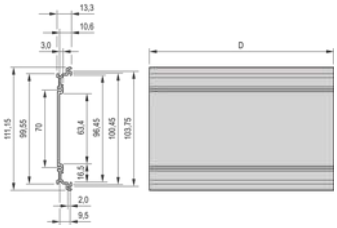

KEY FEATURES

- Integrated lateral groove to accept a PCB
- Side Panel for constructing a plug-in unit consists of an Al extrusion

PRODUCT ATTRIBUTES

- Product Type: Side Panel
- Type: Side Panel
- Rack Height: 3 U
- Length: 160 mm
- Material: Aluminium Extrusion
- Package Quantity: 10
- Depth: 167 mm
- Height: 111.15 mm
- Width: 13.3 mm

ADDITIONAL PRODUCT DETAILS

Side Panel for frame type plug-in unit.

Please take into consideration that deliveries may be carried out in the stated SPQs (SPQ, e.g. 5 pieces, 10 pieces, 50 pieces, etc.). Differing order quantities (e.g. 2 pieces) may be changed to the next possible delivery quantity = Standard Pack Quantity.

CERTIFICATIONS

RoHS COMPLIANT

North America
All locations
+1.763.422.2661
Chat with us:
schroff.nvent.com

Europe
Straubenhardt, Germany
+49.7082.794.0
Betschdorf, France
+33.3.88.90.64.90
Warsaw, Poland
+48.22.209.98.35
Assago, Italy
+39.02.932.7141
Chat with us:
schroff.nvent.com

Asia
Shanghai, China
+86.21.2412.6943
Qingdao, China
+86.532.8771.6101
Singapore
+65.6768.5800
Shin-Yokohama, Japan
+81.45.476.0271
Chat with us:
schroff.nvent.com

Middle East & India
Dubai, United Arab Emirates
+971.4.378.1700
Bangalore, India
+91.80.6715.2001
Istanbul, Turkey
+90.216.250.7374
Chat with us:
schroff.nvent.com

nVent

Our powerful portfolio of brands:
nVent.com CADDY ERICO HOFFMAN RAYCHEM SCHROFF TRACER

© 2023 nVent. All nVent marks and logos are owned or licensed by nVent Services GmbH or its affiliates. All other trademarks are the property of their respective owners.

nVent reserves the right to change specifications without notice.