

Tempatron Tel: +44(0)1621 859500 Fax: +44(0)1621 855335

DTC410 Temperature Controllers

Models Available

DTC410-01 Thermocouple Input On/Off Digital Temperature Controller

DTC410-02 PT100 Input On/Off Digital Temperature Controller

Product Features

- On/Off temperature control action
- Reverse or direct action
- Relay output
- J, K, T or N type thermocouple inputs
- PT100 input
- 10 to 32Vac/dc or 90 to 260Vac
- Programmable alarm output (10 options)
- Programmable set-point limits
- Standard DIN48 square size
- Plug-in socket or panel mounting
- Matching timers available
- Plug-in sockets also available

The Tempatron DTC410 series LCD digital temperature controllers are designed for simple on/off control of temperature or processes in a wide range of industrial applications. The controllers operate from a range of thermocouple or 3 wire PT100 (RTD) input sensors and offer simple two button programming, giving an easy set up procedure.

The temperature controllers are housed in a compact DIN48 square enclosure which can either panel mount or surface/DIN rail mount to a socket, and are powered from either 10 to 32Vac/dc or 90 to 260Vac.

The 3 Amp rated single pole changeover relay output contact is isolated from the supply voltage, and the temperature controllers have clear message displays, providing indication of alarms or error status.

For temperature control in machinery, systems and operational processes

Dimensions

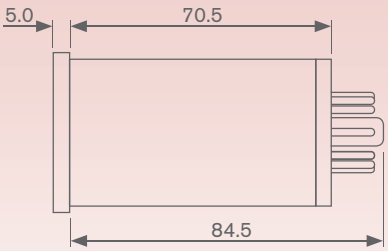

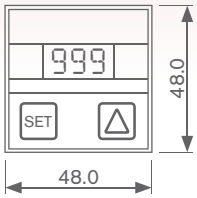

Panel cutout 45mm square (-0.0/+0.5)

All dimensions in mm

Connections

Thermocouple Input

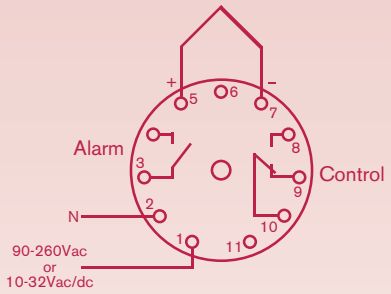

PT100 RTD Input

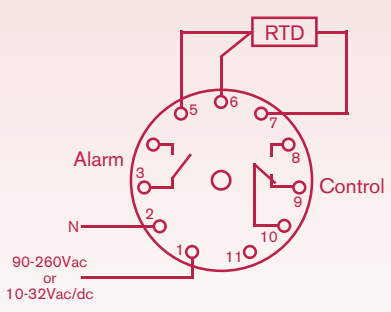

Note:
The ML models do not have isolation between the power supply and sensor so an isolated or non-earthed sensor must be used.

Ordering information

Model	Code	Description
	DTC410	On/Off Digital Temperature Controller

Sensor Input	Code	Description
	01	J, K, T, N Type Thermocouples
	02	PT100 3 Wire

Auxiliary Power	Code	Description
	ML	10-32Vac/dc
	MH	90-260Vac

Plug-in Bases	Code	Description
	CDSR11	11 Pin Rear Screw Panel Socket
	AZ611	11 Pin DIN Rail/Panel Mount Socket
	S11P	11 Pin DIN Rail/Panel Mount Socket

Example	**DTC410-01-MH with CDSR11**

Specification

Gain Accuracy:
- Thermocouple: ±0.25% of scale range
- PT100: ±0.6% of scale range

Offset Accuracy:
- Thermocouple Input: ±5°C
- PT100 Input: ±2°C

Power Supply Voltage:
- 90 to 260Vac
- 10 to 32Vac/dc

Burden:
- <1.5VA at 90 to 260Vac
- <60mA at 10 to 32Vac/dc

Frequency:
- 50/60Hz

Input Sensor:
- J, K, T, N type thermocouples
- 3 wire PT100

Scale Ranges:
- J Thermocouple: -99 to 700°C (999°F)
- T Thermocouple: -99 to 300°C (570°F)
- K/N Thermocouples: -99 to 999°C or°F
- PT100: -99 to 400°C (700°F)

Hysteresis:
- 0 to 9°C programmable (0 = latch)

Control Relay Output:
- Single pole changeover contact
- 3A at 240Vac/30Vdc (resistive)

Alarm Relay Output:
- Single pole N/O contact
- 3A at 240Vac/30Vdc (resistive)

Electrical Contact Life:
- 100,000 operations at rated output

Memory Back-up:
- EEPROM

Operating Temperature:
- -10°C to 50°C

Enclosure Code:
- Case IP40

Weight:
- 200g

Markings:
- CE marked (meets EN61010-1 low voltage and EN50081-1/50082-1 EMC directives)

Specification subject to change without notice.

Tempatron: Eltime House, Hall Road, Maldon, Essex, CM9 4NF UK.

TEMPATRON

Tempatron Industrial Controls is a division of Eltime Ltd.

© Eltime Ltd. Tempatron DTC410 Temperature Controllers 04/2011