MTL4549/C/Y - MTL5549/Y
ISOLATING DRIVER
two-channel, for 4–20mA, HART®
valve positioners with line fault detection

The MTLx549 accepts 4/20mA floating signals from safe-area controllers to drive 2 current/pressure converters (or any other load up to 800Ω) in a hazardous area. For HART valve positioners, the module also permits bi-directional transmission of digital communication signals. Process controllers with a readback facility can detect open or short circuits in the field wiring: if these occur, the current taken into the terminals drops to a preset level. The MTL4549C and MTLx549Y are very similar to the MTLx549 except that they provide open circuit detection only (i.e. no short-circuit detection).

SPECIFICATION

See also common specification

Number of channels
Two

Location of I/P converter
Zone 0, IIC, T4–6 hazardous area if suitably certified
Div. 1, Group A, hazardous location

Working range
4 to 20mA

Digital signal bandwidth
500Hz to 10kHz

Maximum load resistance
800Ω (16V at 20mA)

Minimum load resistance
90Ω (short-circuit detection at < 50Ω)

Output resistance
> 1MΩ

Under/over range capability
Under range = 1mA
Over range = 24mA (load ≤ 520Ω)

Input and output circuit ripple
<40µA peak-to-peak

Communications supported
HART

Transfer accuracy at 20°C
Better than 20µA

Temperature drift
< 1.0µA/°C

Input characteristics

Field wiring state	MTL4549	MTL4549C	MTL4549Y
Normal	< 6.0V	< 6.0V	< 6.0V
Open-circuit	< 0.9mA	< 0.9mA	< 0.5mA
Short-circuit	< 0.9mA	N.A.	N.A.

Response time
Settles within 200µA of final value within 100ms

MTL4549/C/Y

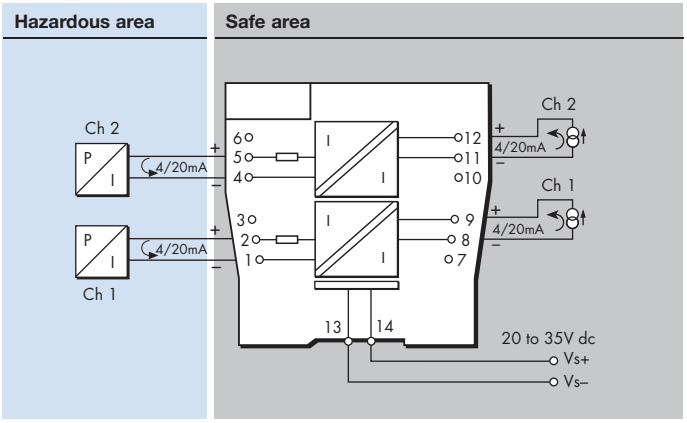

MTL5549/Y

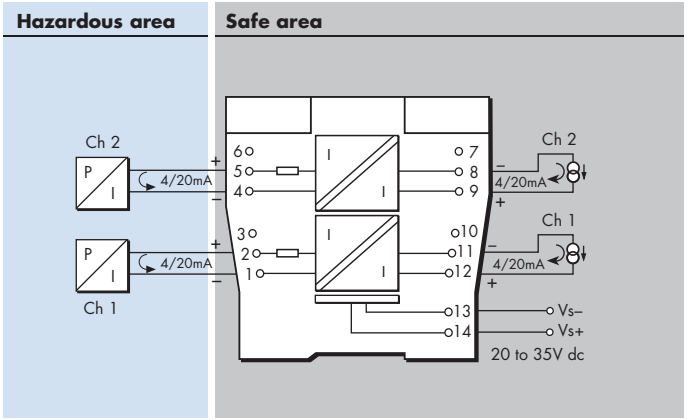

LED indicator
Green: power indication

Maximum current consumption (with 20mA signals into 250Ω load)
70mA at 24V dc

Power dissipation within unit (with 20mA signals into 250Ω load)
1.6W at 24V

Safety description (each channel)
V_o=28V I_o=93mA P_o=0.65W Um = 253V rms or dc

SIL capable
These models have been assessed for use in IEC 61508 functional safety applications. See data on MTL web site.

The given data is only intended as a product description and should not be regarded as a legal warranty of properties or guarantee. In the interest of further technical developments, we reserve the right to make design changes.

EUROPE (EMEA): +44 (0)1582 723633
enquiry@mtl-inst.com
THE AMERICAS: +1 800 835 7075
csinfo@mtl-inst.com
ASIA-PACIFIC: +65 6 487 7887
sales@mtlsing.com.sg