CATALOG

Switch fuses

World class performance in the most demanding applications

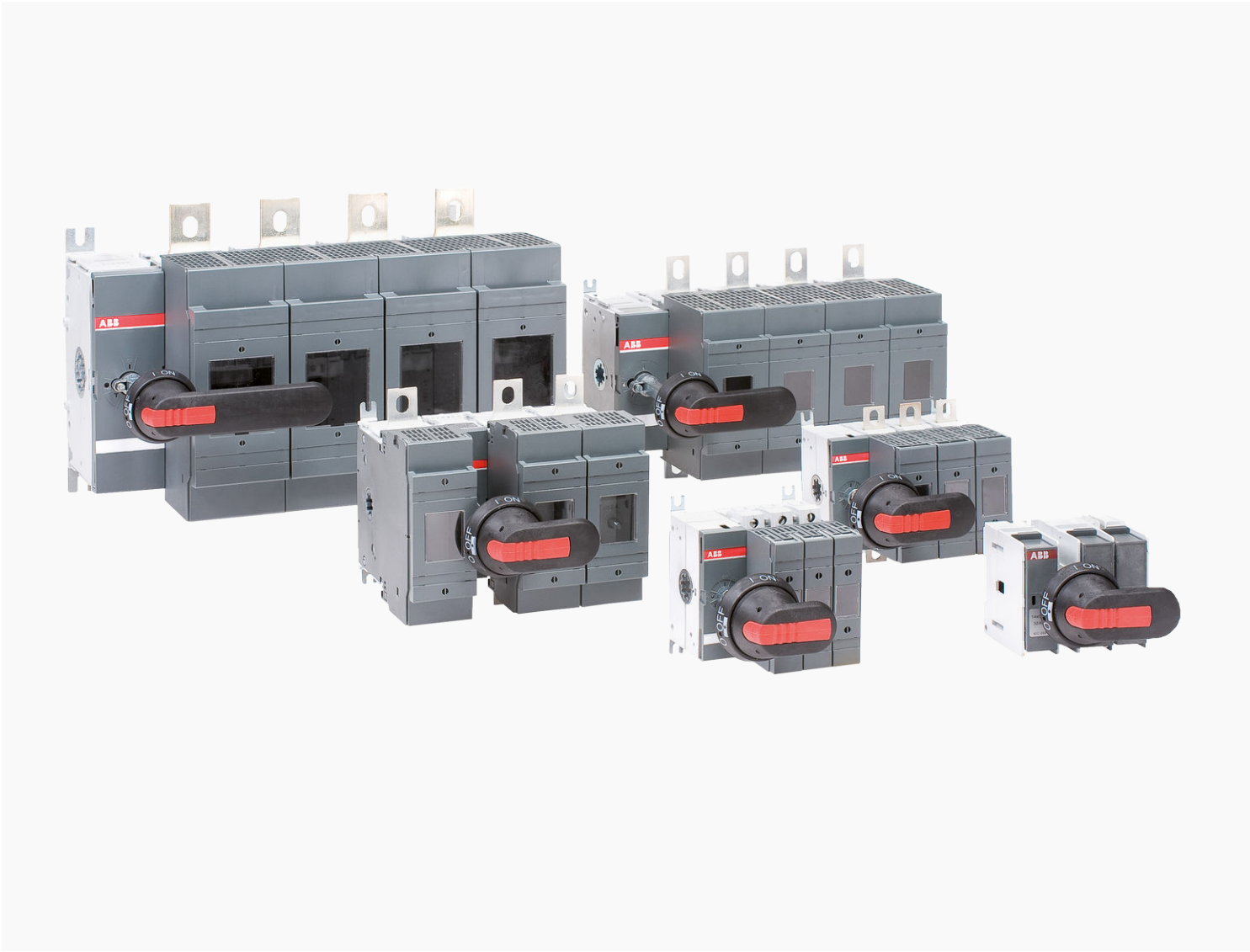

- Reliability and performance
- Safe maintenance and operation
- Proven and practical

Table of contents

01. Introduction to switch fuses 4

02. Type designation key 9

03. Technical data 14

04. Ordering information 26

05. Dimensional drawings 118

Switch fuses

World class performance in the most demanding applications

OS and OSM switch fuses by ABB have been designed to deliver world-class performance in even the most extreme conditions. Our extensive range of reliable switch fuses, both manual and motorized, is ensured to have your application needs covered.

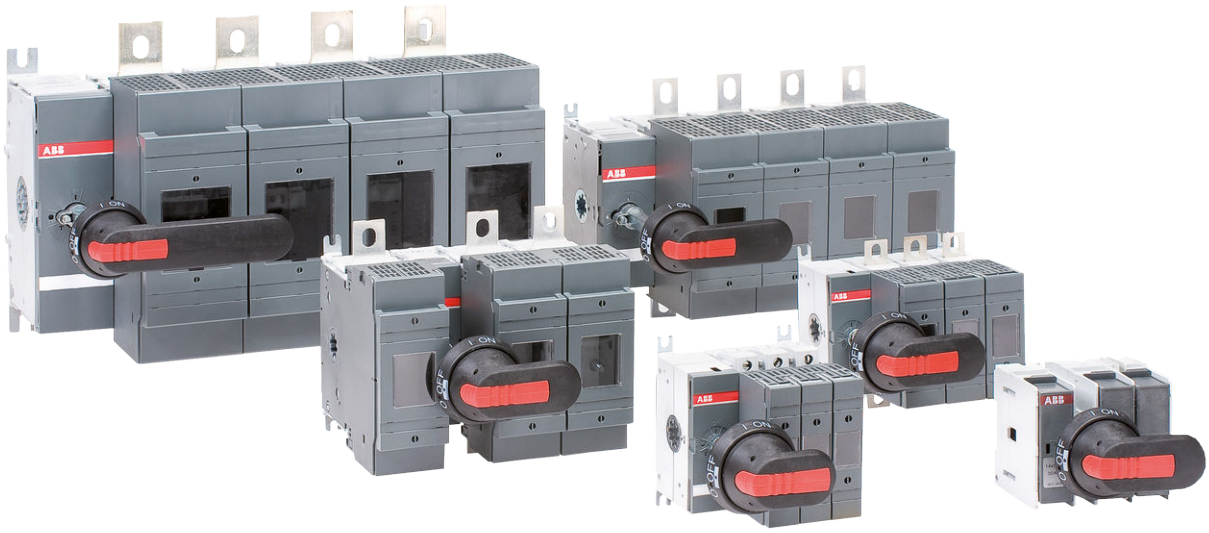

Reliable in extreme conditions

Reliability and performance
OS switch fuses are the optimal solution for motor protection. They can be installed next to transformers in heavy industry. The contact design combined with the fuse link enables rapid fault clearance and maintains protection level even after a fault occurs. Our motorized switch fuses protect motors from overcurrent and can be operated both remotely and manually.

Safety and protection

Safe maintenance and operation
OS switch fuses are designed for personal safety as well as for reliable process protection. When in the ON position, the interlocked fuse protection covers cannot be removed. When in the OFF position, the fuse link is fully isolated from both ends. Also, the handle is padlockable with three separate padlocks for ensured safety.

Speed up your projects

Proven and practical
Test proven type 2 coordination tables for the OS switch fuses are available online 24/7. From there you can easily select the appropriate ABB components for motor starting and protection.These motor starting solutions also help minimize the time needed for sizing all the starter components and ensure reliable operation after a fault occurs.

Switch fuses

World class performance in the most demanding applications

ABB switch fuses deliver superior performance and protection for even the most demanding industrial applications.









OS switch fuses are ideal for demanding applications where continuity of operations is vital even in case of a fault. These devices are used for protection in a wide range of applications. They are often found in power distribution boards and control cabinet in heavy industrial use. They are built to meet installation requirements close to the main transformer.

In addition to industrial, business and residential buildings, these switch fuses are regularly used industrial cranes and hoists to isolate and protect the motors.

OS switch fuses may also be found protecting stored energy and battery packs from potential short circuits and safely isolate them during maintenance.

Switch fuses

World class performance in the most demanding applications

Designed for extreme conditions
Thanks to the knife contact design, the current flow keeps the contacts pushed firmly together before, during and after a fault without damaging the switch or affecting the performance of the contacts. The contacts are self-cleaning and maintenance free, providing a long, reliable electrical life. In OFF- position, the fuse link is fully isolated from both ends.

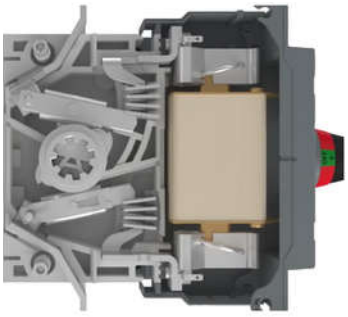

Pole structure in OFF- position

Modular design
All our switches have been designed for easy and cost-efficient installation, maintenance, and use. The modular design enables 2-, 3- and 4-pole installation with different position of the switching mechanism to suit your needs and special requirements.

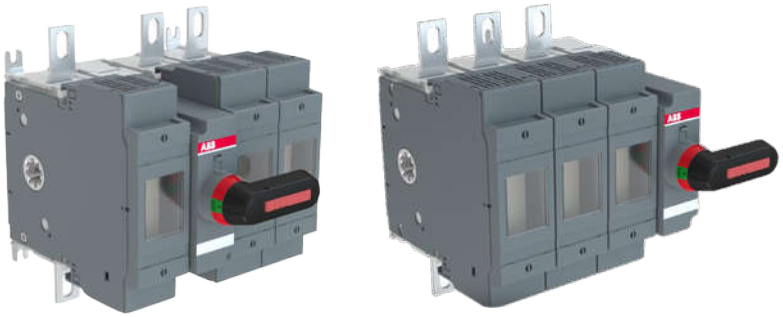

Modular design

Time saving accessories
The adjustable shaft (for external handles), mounting feet, along with snap-on auxiliary contacts and terminal shrouds create considerable savings in terms of installation time and costs. For example, the shaft can be adjusted to various installation depths, which eliminates the need for special cutting tools. This decreases handle installation times by up to 50%.

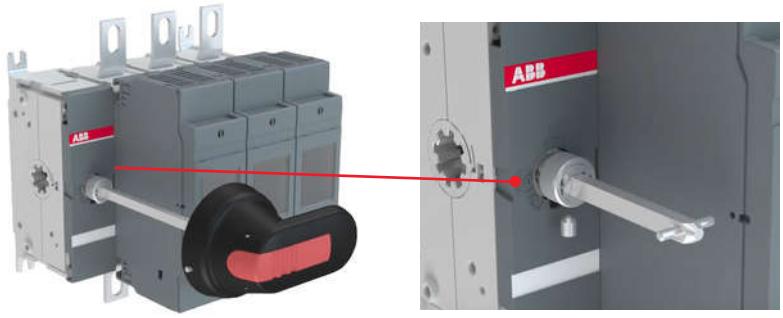

Adjustable shaft

Safety for personnel
The interlocking fuse covers prevent opening while the switch is in ON-position. The switch fuses have contacts on both sides of the fuse. The fuses are totally isolated in the OFF-position, reducing the risk of electric shock to authorized personnel.



Interlocking fuse covers

Manual operated switch fuses 20...1250 A
Designed to deliver

Manual operated switch fuses 20...1250 A product range:








Switch size [A]	**20**	**25**	**30**	**32**	**40**	**32**	**50**	**60**	**63**	**100**	**125**	**160**	**100**	**200**	**250**
DIN	-				OS40FD	OS32GD				OS125GD				OS200D	
	-					OS63GD				OS160GD				OS250D	
BS	OS20FB					OS32GB				OS100GB				OS200B	
	OS32FB					OS63GB				OS125GB				OS250B	
										OS160GB					
NFC	OS25FF					OS50GF				OS125GF					
	OS32FF														
UL98 File #E101914	OS30FACC					OS60GJ									
	OS30FAJ												OS100GJ		
AC23/400V [kW]		11		15	18.5	15	22		30		55	75		110	140
AC23/415V [kW]	7.5			15		15			30	55	55	75		110	145
480 V [HP]			15					30					60		
600 V [HP]			20					50					75		






Switch size [A]	**200**	**315**	**400**	**600**	**630**	**800**	**1200**	**1250**
DIN		OS400D		OS630D			OS1250D	
				OS800D				
BS		OS315B		OS630B			OS1250B	
		OS400B		OS800B				
UL98 File# E101914	OS200J	OS400J		OS600J			OS1200L	
				OS800L				
AC23/400V [kW]			230		355	450		560
AC23/415V [kW]		180	230		355	450		560
480 V [HP]	150		250	400		500	-	
600 V [HP]	200		250	500		600	-	

Please note that accessories are not automatically included in your order. See available accessories from pages 65-67 and ordering information from pages 69-96

Motorized switch fuses 32...1250 A
Ideal for remote use

Motorized switch fuses 32...1250 A product range:





Switch size [A]	**32**	**50**	**63**	**100**	**125**	**160**	**200**	**250**
DIN	OSM32GD			OSM125GD			OSM200D	
	OSM63GD			OSM160GD			OSM250D	
BS	OSM32GB			OSM100GB			OSM200B	
	OSM63GB			OSM125GB			OSM250B	
				OSM160GB				


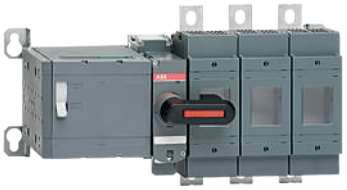


Switch size [A]	**315**	**400**	**630**	**800**	**800**	**1250**
DIN	OSM400D		OSM630D			OSM1250D
			OSM800D			
BS	OSM315B		OSM630B			OSM1250B
	OSM400B		OSM800B			

Please note that accessories are not automatically included in your order. See available accessories from page 65-67 and ordering information from pages 82-84, 86-88 and 92-93.

Manual operated switch fuses 20...40 A (OS Mini)

Type designation key

Type codes

Understanding the type code keys below will help you quickly identify the correct product for your needs. The simple naming system allows you to see the products type, Ampere rating, standard classification and number of poles, all in one glance.

ABB Brand

OS	ABB switch fuse/fusible switch

Switch size
The second part in the code indicates the ampere rating [A] of the product: 20A...40A, followed by the generation letter: F

Number of poles and placing of the operating mechanism

Symbols	
12	3 poles, operating mechanism between the poles
22	4 poles, operating mechanism between the poles
30	3 poles, operating mechanism at the right end of the switch

Fourth pole/neutral terminal

Symbols	
N1	Non-fused switched neutral on the left side
F	Fused switched neutral
Blank	Terminal not included

OS 25F F _ 22 10 N1 -2

Fuse type

Symbols	
D	DIN
B	BS
F	NFC
AJ	J
ACC	CC

Fuse size

Symbols		
A1	A2	BS88, A1, A2
000		DIN 000
10	14	NFC 10x38, 14x51

Switch operation

Symbols	
Blank	Front operation
S	Side operation

Included handle

Symbols	
Blank	No handle included, OSFAJ_ and OS30FACC_
Blank	Pistol handle and shaft included with OS40FD_, OS20FB_, OS32FB_, OS25FF_ and OS32FF_
22	Pistol handle and shaft included with OSFAJ_ and OS30FACC_
30	No handle included with OS40FD_, OS20FB_, OS32FB_, OS25FF_ and OS32FF_

Pole configuration table

The various placing options of the operating mechanism in relation to the 3 or 4 poles is illustrated below. The operating mechanism may be placed at the end of the switch or between poles.

Between the poles OS_12 or 22:

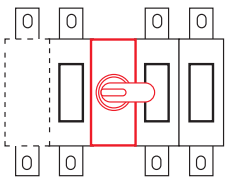

Side operated types OS_30 or 40 / OS_03 or 04:

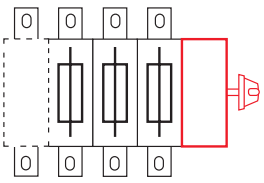

Manual operated switch fuses 32...1250 A

Type designation key

Type codes

Understanding the type code keys below will help you quickly identify the correct product for your needs. The simple naming system allows you to see the products type, Ampere rating, standard classification and number of poles, all in one glance.

ABB Brand

OS	ABB switch fuse/fusible switch

Switch size

The second part in the code indicates the ampere rating [A] of the product: 32A...1250A, possibly followed by generation letter: G

Fourth pole/neutral terminal

Symbols	
Blank	Neutral terminal not included
N1	Non-fused switched neutral on the left side
N2	Non-fused switched neutral on the right side
N3	Includes a detachable neutral link integrated into the mechanism
F	Fused switched neutral

Included handle

Symbols	
Blank	No handle included
P	Pistol handle and shaft
K	Direct mount handle

OS 125G D _ 04 N2 _ P

Fuse type

Symbols	
D	DIN
B	BS
F	NFC
J	J
L	L

Switch operation

Symbols	
Blank	Front operation
S	Side operation

Number of poles and placing of the operating mechanism

Symbols	
03	3 poles, operating mechanism at the left end of the switch
04	4 poles, operating mechanism between the poles
12	3 poles, operating mechanism between the poles
22	4 poles, operating mechanism between the poles
30	3 poles, operating mechanism at the right end of the switch
40	4 poles, operating mechanism at the right end of the switch

Terminals for special connection (only IEC)

Symbols	
Blank	No special connection
BB	Back in, back out
LR	Left in, right out

Pole configuration table

The various placing options of the operating mechanism in relation to the 3 or 4 poles is illustrated below. The operating mechanism may be placed at the end of the switch or between poles.

At the end of the switch fuse OS_03 or 04:

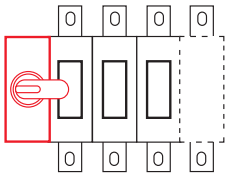

Between the poles OS_12 or 22:

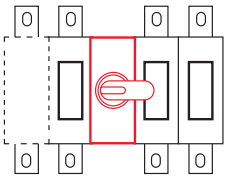

Side operated types OS_30 or 40 / OS_03 or 04:

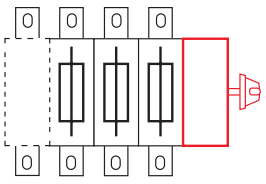

BB-types:

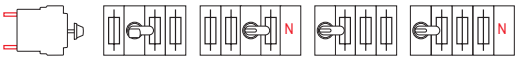

LR-types:

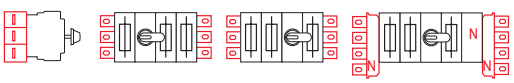

Motorized switch fuses 32...1250 A

Type designation key

Type codes

Understanding the type code keys below will help you quickly identify the correct product for your needs. The simple naming system allows you to see the products type, Ampere rating, standard classification and number of poles, all in one glance.

ABB Brand

OSM ABB motorized switch fuse

Switch size

The second part in the code indicates the ampere rating [A] of the product: 32A...1250A, possibly followed by generation letter: G

Number of poles

Symbols	
03	3 poles, motor operator at the left end of the switch
04	4 poles, motor operator at the left end of the switch

Motor operator voltage

Symbols	
230C	230 V AC

OSM 125G B 4 N1 M230C

Fuse type

Symbols	
D	DIN
B	BS

Fourth pole/neutral terminal

Symbols	
Blank	Neutral terminal not included
N1	Non-fused switched neutral on the left side
N2	Non-fused switched neutral on the right side
N3	Includes a detachable neutral link integrated into the mechanism
F	Fused switched neutral

Pole configuration table

The various placing options of the operating mechanism in relation to the 3 or 4 poles is illustrated below.

At the end of the switch fuse OSM_03 or 04:

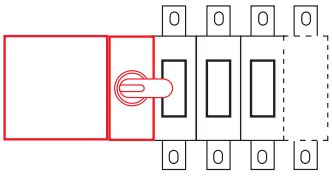


A14
A15
A16
A17
A19
A20
B14-B15
B
区
Area
88:88

Switch fuses
Technical data

Manual operated switch fuses, IEC	
OS Mini 20...40 A	15
OS32...160G	16
OS200...400	17
OS630...1250	18

Special connected switch fuses, IEC	
OS125...200	19
OS250...400	20

Motorized switch fuses, IEC	
Motor operators OSM32...250	21
Motor operators OSM315...1250	22

Fusible disconnect switches, UL/CSA	
OS30...200	22
OS400...1200	23

Manual operated switch fuses, IEC

Technical data for OS Mini 20...40 A

Technical data according to IEC 60947-3

Switch type				OS Mini 20	OS Mini 25	OS Mini 32	OS Mini 40
Rated insulation voltage	Pollution degree 3		50 Hz 1min.	1000 V	1000 V	1000 V	1000 V
Dielectric strength				10 kV	10 kV	10 kV	10 kV
Rated impulse withstand voltage				12 kV	12 kV	12 kV	12 kV
Rated thermal current in ambient 35 °C and temporarily 40 °C [1] / max. fuse power dissipation	In open air		Cu	20 A/ 3.5 W	25 A/3.5 W	32 A/3.5 W	40 A/4.5 W
	In enclosure [2]			20 A/ 3.5 W	25 A/3.5 W	32 A/3.5 W	40 A/4.5 W
	In enclosure with solid links			32 A	32 A	32 A	40 A
...with minimum cable cross section				2.5 mm²	4 mm²	6 mm²	10 mm²
Power loss / pole	With rated current, without fuse			1.3 W	1.3 W	2 W	3.5 W
Derating, mounting on wall horizontal fuses	In open air or ventilated enclosure			0 %		0 %	0 %
	Totally enclosed			5 %	5 %	5 %	5 %
Derating, mounting on ceiling				10 %	10 %	10 %	10 %
Derating at 60 °C	In open air / in enclosure			20/ 20 %	20/20 %	20/20 %	20/20 %
Rated operational voltage AC-20 and DC-20				1000 V	1000 V	1000 V	1000 V
Rated operational current, AC-21A			up to 500 V	20 A	25 A	32 A	40 A
			690 V	20 A	25 A	32 A	40 A
Rated operational current, AC-22A			up to 500 V	20 A	25 A	32 A	40 A
			690 V	20 A	25 A	32 A	40 A
Rated operational current, AC-23A			up to 500 V	20 A	25 A	32 A	40 A
			690 V	20 A	25 A	32 A	40 A
Rated operational current / poles in series DC-21A			48 V	20 A/2	25 A/2	32 A/2	32 A/2
			110-220 V	20 A/2	25 A/2	32 A/2	32 A/2
			440 V	20 A/4	25 A/4	25 A/4	32 A/4
Rated operational current / poles in series DC-22A			48 V	20 A/2	25 A/2	32 A/2	32 A/2
			110-220 V	20 A/2	25 A/2	32 A/2	32 A/2
			440 V	20 A/4	25 A/4	32 A/4	32 A/4
Rated operational current / poles in series DC-23A			48 V	20 A/2	25 A/2	32 A/2	32 A/2
			110-220 V	20 A/2	25 A/2	32 A/2	32 A/2
			440 V	20 A/4	25 A/4	32 A/4	32 A/4
Rated operational power, AC-23 [2]	The kW-ratings are accurate for three-phase 1500 R.P.M. standard asynchronous motors.		230 V	5.5 kW	5.5 kW	7.5 kW	11 kW
			400 V	7.5 kW	11 kW	15 kW	18.5 kW
			415 V	7.5 kW	11 kW	15 kW	18.5 kW
			500 V	11 kW	15 kW	18.5 kW	22 kW
			690 V	15 kW	22 kW	22 kW	30 kW
Rated breaking capacity in category AC-23			≤ 690 V	256 A	256 A	256 A	320 A
Rated breaking capacity / poles in series in category DC-23			up to 220 V	128/2	128/2	128/2	128/2
			440 V	128/4	128/4	128/4	128/4
Rated conditional short-circuit current I_q (r.m.s.) and corresponding max. allowed cut-off current of fuse $\hat{i}_c$	I_q 80 kA, 415 V	Max allowed $\hat{i}_c$		9 kA	9 kA	9 kA	9 kA
	I_q 100 kA, 500 V	Max allowed $\hat{i}_c$		8 kA	8 kA	8 kA	8 kA
The cut-off current $\hat{i}_c$ refers to values listed by fuse manufacturers (single phase test acc. to IEC60269).	I_q 50 kA, 690 V	Max allowed $\hat{i}_c$		7 kA	7 kA	7 kA	7 kA
	I_q 80 kA, 690 V	Max allowed $\hat{i}_c$		7.5 kA	7.5 kA	7.5 kA	7.5 kA
Rated short-time withstand current, 1 s.	r.m.s. -value			1 kA	1 kA	1 kA	1 kA
Rated capacitor power when no initial charge on the capacitor	The capacitor rating of the switch-fuse is limited by the fuse link.		400 V	10 kVAr	12.5 kVAr	15 kVAr	15 kVAr
			415 V	10 kVAr	12 kVAr	15 kVAr	15 kVAr
			690 V	15 kVAr	20 kVAr	25 kVAr	25 kVAr
Mechanical endurance	Divide by two for operation cycles			20 000 Oper.	20 000 Oper.	20 000 Oper.	20 000 Oper.
Fuse types, IEC 60269-2	DIN 43620						000
	NFC 63210, 63211				10x38	14x51	
	BS 88-2, -6			A1		A1, A2	
	distance of fuse-link bolts			M4/44.5 mm		M4/45.5 mm(A1)	
	distance of fuse-link bolts					M4/73 mm (A2)	
Cable size			Cu	0.75...10 mm²	0.75...10 mm²	0.75...10 mm²	0.75...10 mm²
Terminal tightening torque	Counter torque required			2 Nm	2 Nm	2 Nm	2 Nm
Fuse-links bolts tightening torque				2 Nm		2 Nm	
Operating torque	Typical for 3-pole switch fuses			3 Nm	3 Nm	3 Nm	3 Nm

[1] Acc. to IEC 60957-2, IEC 60947-1, § 6.1.1. Minimum ambient temperature -5 °C. Category B: -5 °C...-35 °C.
[2] Some fuse links limit these figures further. Starting current characteristics must be considered separately.

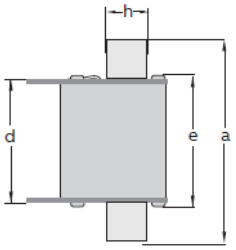

Manual operated switch fuses, IEC

Technical data for OS32...160G

Technical data according to IEC 60947-3

Switch type				OS_32G	OS_50G	OS_63G	OS_100G	OS_125G	OS_160G
Rated insulation voltage			50 Hz 1min.	1000 V	1000 V	1000 V	1000 V	1000 V	1000 V
Dielectric strength	Pollution degree 3			10 kV	10 kV	10 kV	10 kV	10 kV	10 kV
Rated impulse withstand voltage				12 kV	12 kV	12 kV	8 kV	8 kV	8 kV
Rated thermal current in ambient 35 °C and temporarily 40 °C[1] / max. fuse power dissipation	In open air			32 A/7.5 W	50 A/7.5 W	63 A/7.5 W	100 A/12 W	125 A/12 W	160 A/12 W
	In enclosure			32 A/7.5 W	50 A/7.5 W	63 A/7.5 W	100 A/12 W	125 A/12 W	160 A/12 W
...with minimum cable cross section			Cu	6 mm²	10 mm²	16 mm²	50 mm²	50 mm²	70 mm²
Power loss / pole	With rated current, without fuse			1 W	2.5 W	4 W	4 W	5 W	9 W
Derating, mounting on wall horizontal fuses	In open air or ventilated enclosure			0 %	0 %	0 %	0 %	0 %	0 %
	Totally enclosed			5 %	5 %	5 %	5 %	5 %	5 %
Derating, mounting on ceiling				10 %	10 %	10 %	10 %	10 %	10 %
Derating at 60 °C	In open air/ in enclosure			20/20 %	20/20 %	20/20 %	20/20 %	20/20 %	20/20 %
Rated operational voltage AC-20 and DC-20				1000 V	1000 V	1000 V	1000 V	1000 V	1000 V
Rated operational current, AC-21A			up to 500 V	32 A	50 A	63 A	100 A	125 A	160 A
			690 V	32 A	50 A	63 A	100 A	125 A	160 A
Rated operational current, AC-22A			up to 500 V	32 A	50 A	63 A	100 A	125 A	160 A
			690 V	32 A	50 A	63 A	100 A	125 A	160 A
Rated operational current, AC-23A			up to 500 V	32 A	50 A	63 A	100 A	125 A	160 A
			690 V	32 A	50 A	63 A	100 A	125 A	160 A
Rated operational current / poles in series DC-21A			48 V	32 A/2	50 A/2	63 A/2	100 A/2	125 A/2	160 A/2
			110-220 V	32 A/2*	50 A/2*	63 A/2*	100 A/2*	125 A/2*	125 A/2*
			440 V	32 A/4*	50 A/4*	50 A/4*	100 A/4*	125 A/4*	125 A/4*
Rated operational current / poles in series DC-22A			48 V	32 A/2	50 A/2	63 A/2	100 A/2	125 A/2	160 A/2
			110-220 V	32 A/2*	50 A/2*	63 A/2*	100 A/2*	125 A/2*	125 A/2*
Rated operational current / poles in series DC-23A			48 V	32 A/2	50 A/2	63 A/2	100 A/2	125 A/2	160 A/2
			110-220 V	32 A/2*	50 A/2*	63 A/2*	100 A/2*	125 A/2*	125 A/2*
Rated operational power, AC-23[2]	The kW-ratings are accurate for three-phase 1500 R.P.M. standard asynchronous motors.		230 V	7.5 kW	11 kW	18.5 kW	30 kW	37 kW	45 kW
			400 V	15 kW	22 kW	30 kW	55 kW	55 kW	75 kW
			415 V	15 kW	22 kW	30 kW	55 kW	55 kW	75 kW
			500 V	18.5 kW	30 kW	37 kW	55 kW	75 kW	90 kW
			690 V	22 kW	37 kW	55 kW	90 kW	110 kW	132 kW
Rated breaking capacity in category AC-23			≤ 690 V	504 A	504 A	504 A	1280 A	1280 A	1280 A
Rated breaking capacity / poles in series in category DC-23			up to 220 V	252 A/2	252 A/2	252 A/2	640 A/2	640 A/2	640 A/2
Rated conditional short-circuit current I_q (r.m.s.) and corresponding max. allowed cut-off current of fuse $\hat{i}_c$ The cut-off current $\hat{i}_c$ refers to values listed by fuse manufacturers (single phase test acc. to IEC60269).	I_q 80 kA, 415 V	Max allowed $\hat{i}_c$ Max OFA_ fuse size gG/aM		13.5 kA 80/63 A	13.5 kA 80/63 A	13.5 kA 80/63 A	23.5 kA 160/160 A	23.5 kA 160/160 A	23.5 kA 160/160 A
	I_q 100 kA, 500 V	Max allowed $\hat{i}_c$ Max OFA_ fuse size gG/aM		12.5 kA 63/50 A	12.5 kA 63/50 A	12.5 kA 63/50 A	25.5 kA 160/160 A	25.5 kA 160/160 A	25.5 kA 160/160 A
	I_q 50 kA, 690 V	Max allowed $\hat{i}_c$ Max OFA_ fuse size gG/aM		9.5 kA 63/50 A	9.5 kA 63/50 A	9.5 kA 63/50 A	17.5 kA 125/160 A	17.5 kA 125/160 A	17.5 kA 125/160 A
	I_q 80 kA, 690 V	Max allowed $\hat{i}_c$ Max OFA_ fuse size gG/aM		11.5 kA 50/50 A	11.5 kA 50/50 A	11.5 kA 50/50 A	20.5 kA 125/160 A	20.5 kA 125/160 A	20.5 kA 125/160 A
	I_q 50 kA, 415 V	Max allowed $\hat{i}_c$ Max BS fuse size gG/gM		10 kA 63/63M80 A		10 kA 63/63M80 A	18 kA 160/100M160 A	18 kA 160/100M160 A	18 kA 160/100M160 A
	I_q 80 kA, 415 V	Max allowed $\hat{i}_c$ Max BS fuse size gG/gM		13 kA 63/63M80 A		13 kA 63/63M80 A	19,5 kA 160/100M125 A	19,5 kA 160/100M125 A	19,5 kA 160/100M125 A
Rated short-time withstand current, 1 s.	r.m.s. -value			2.5 kA	2.5 kA	2.5 kA	5 kA	5 kA	5 kA
Rated capacitor power when no initial charge on the capacitor	The capacitor rating of the switch-fuse is limited by the fuse link.		400 V	15 kVAr	20 kVAr	25 kVAr	40 kVAr	50 kVAr	60 kVAr
			415 V	15 kVAr	25 kVAr	32 kVAr	42 kVAr	55 kVAr	65 kVAr
			690 V	25 kVAr	42 kVAr	50 kVAr	75 kVAr	90 kVAr	100 kVAr
Mechanical endurance	Divide by two for operation cycles			20 000 Oper.	20 000 Oper.	20 000 Oper.	20 000 Oper.	16 000 Oper.	16 000 Oper.
Fuse types, IEC 60269-2	DIN 43620			000[6]		000[6]		000,00 [6] [7]	000,00 [6] [7]
	NFC 63210, 63211				14x51			22x58	
	BS 88-2, -6			A2-A3[5]		A2-A3[3]	A2-A4[4]	A2-A4[4]	A2-A4[4]
	distance of fuse-link bolts			M5/73 mm		M5/73 mm	M5/73 mm	M5/73 mm	M5/73 mm
	distance of fuse-link bolts						M8/94 mm	M8/94 mm	M8/94 mm
Cable size			Cu	2.5...25 mm²	2.5...25 mm²	2.5...25 mm²			
Terminal tightening torque	Counter torque required			3/4 Nm [5]	3/4 Nm [5]	3/4 Nm [5]	15-22 Nm	15-22 Nm	15-22 Nm
Fuse-links bolts tightening torque				3.5 Nm		3.5 Nm	M5:3.5 Nm M8:5 Nm	M5:3.5 Nm M8:5 Nm	M5:3.5 Nm M8:5 Nm
Operating torque	Typical for 3-pole switch fuses			5 Nm	5 Nm	5 Nm	7 Nm	7 Nm	7 Nm

* = Utilization category B.

[1] Acc. to IEC 60947-1, § 6.1.1. Minimum ambient temperature -5°C. Category B: -5°C...-35°C.

[2] Some fuse links limit these figures further. Starting current characteristics must be considered separately.

[3] Max. fuse body diam. 22 mm.

[4] Max. fuse body diam. 32 mm.

[5] 3 Nm with cable sizes 2.5...6 mm2, 4 Nm with cable sizes 10...25 mm2.

[6] Max. allowed knife dimension h is 15 mm.

[7] For solid link size 00 the a dimension must be min. 80.0 mm.

Manual operated switch fuses, IEC

Technical data for OS200...400

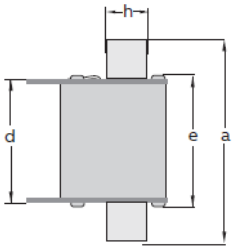

Technical data according to IEC 60947-3

Switch type				OS_200GB	OS_200_	OS_250_	OS_315B_	OS_400_
Rated insulation voltage and rated operational voltage AC-20 and DC-20	Pollution degree 3		50 Hz 1min.	1000 V	1000 V	1000 V	1000 V	1000 V
Dielectric strength				10 kV	10 kV	10 kV	10 kV	10 kV
Rated impulse withstand voltage				8 kV	12 kV	12 kV	12 kV	12 kV
Rated thermal current in ambient 35 °C and temporarily 40 °C[1] / max. fuse power dissipation	In open air			200 A/14 W	200 A/17 W	250 A/23 W	315 A/32 W	400 A/45 W
	In enclosure			200 A/14 W	200 A/15 W	250 A/20 W	315 A/32 W	400 A/30 W
...with minimum cable cross section			Cu	70 mm²	95 mm²	120 mm²	185 mm²	240 mm²
Derating, mounting on wall horizontal fuses	In open air or ventilated enclosure			0 %	0 %	0 %	0 %	4 %
	Totally enclosed			5 %	5 %	5 %	5 %	8 %
Derating, mounting on ceiling				10 %	10 %	10 %	10 %	10 %
Derating at 60 °C	In open air / in enclosure			20/20 %	20/20 %	20/20%	20/20 %	20/20 %
Power loss / pole	With rated current, without fuse			9 W	8 W	13 W	19 W	30 W
Rated operational current AC-22B			≤ 415 V	200 A				
Rated operational current AC-21A			≤ 500 V		200 A	250 A	315 A	400 A
			690 V		200 A	250 A	315 A	400 A
Rated operational current AC-22A			≤ 415 V		200 A	250 A	315 A	400 A
			500 V		200 A	250 A	315 A	400 A
			690 V		200 A	250 A	315 A	400 A
Rated operational current AC-23A			≤ 415 V		200 A	250 A	315 A	400 A
			500 V		200 A	250 A	315 A	400 A
			690 V		200 A	250 A	315 A	400 A
Rated operational current / poles in series DC-21A, DC-22A and DC-23A			≤ 220 V		200 A/1	250 A/1	315 A/2	400 A/2
			440 V		200 A/2	250 A/2	315 A/3*	400 A/3*
			660 V		200 A/3	250 A/3	315 A/4*	400 A/4*
			750 V		180 A/4	230 A/4	315 A/4*	400 A/4*
			880 V		180 A/4	230 A/4		
Rated operational power AC-23[3]			230 V		60 kW	75 kW	100 kW	132 kW
			400 V		110 kW	140 kW	160 kW	220 kW
			415 V		110 kW	145 kW	180 kW	230 kW
			500 V		132 kW	170 kW	220 kW	280 kW
			690 V		200 kW	250 kW	315 kW	400 kW
Rated breaking capacity AC-23			≤ 690 V		1600 A	2000 A	3200 A	3200 A
Rated conditional short-circuit current I_q (r.m.s.) and corresponding max. allowed cut-off current of fuse $\hat{i}c$	I_q 80 kA, 415 V	Max allowed $\hat{i}_c$ Max. OFA_ fuse size gG/aM		23.5 kA	35 kA 250/200 A	40.5 kA 355/315 A		59 kA 500/500 A
	I_q 100 kA, 500 V	Max allowed $\hat{i}_c$ Max. OFA_ fuse size gG/aM			37.5 kA 250/200 A	37.5 kA 250/250 A		63.5 kA 500/500 A
The cut-off current $\hat{i}c$ refers to values listed by fuse manufacturers (single phase test acc. to IEC60269).	I_q 80 kA, 690 V	Max allowed $\hat{i}_c$ Max. OFA_ fuse size gG/aM			25 kA 250/250 A [8]	32.5 kA 250/250 A		46 kA 315/400 A
	I_q 100 kA, 690 V	Max allowed $\hat{i}_c$ Max. SIBA NH fuse size gG/aM				200/200 A		
	I_q 50 kA, 415 V	Max allowed $\hat{i}_c$ Max. BS fuse size gG/gM		21 kA 200/- A	28 kA 200/200M315	28 kA 250/200M315	44 kA 400/400M500	44 kA 400/400M500
	I_q 80 kA, 690 V	Max allowed $\hat{i}_c$ Max. BS fuse size gG/gM			28 kA 250/200M250 A	28 kA 250/200M250 A	48 kA 400/400M450 A	48 kA 400/400M450 A
Rated short-time withstand current, 1s.	r.m.s. -value			5 kA	8 kA	8 kA	14 kA	14 kA
	Max. distance from switch frame to nearest busbar/cable support			150 mm	150 mm	150 mm	150 mm	150 mm
Rated capacitor power when no initial charge of the capacitor	The capacitor ratings of the switch-fuses are limited by the fuse links		400 V	60 kVAr	90 kVAr	105 kVAr	145 kVAr	180 kVAr
			415 V	65 kVAr	100 kVAr	115 kVAr	160 kVAr	200 kVAr
			500 V		120 kVAr	135 kVAr	175 kVAr	215 kVAr
			690 V	100 kVAr	160 kVAr	190 kVAr	250 kVAr	325 kVAr
Mechanical endurance	Divide by two for operation cycles			16 000 Oper.	20 000 Oper.	20 000 Oper.	16 000 Oper.	16 000 Oper.
Fuse types, IEC 60269-2	DIN 43620				0[6]	0-1[6]		0-2[7]
	BS 88-2, -6			A2-A4	B1-B2	B1-B3[4]	B1-B4[5]	B1-B4[5]
	Size / distance of fuse-link bolts			M5/73 mm	M6/111 mm	M8/111 mm	M8/111 mm	M8/111 mm
				M8/94 mm				
Terminal tightening torque	Counter torque required			15-22 Nm	15-22 Nm	30-44 Nm	30-44 Nm	30-44 Nm
Fuse-links bolts tightening torque				M5:3.5 Nm M8:5 Nm	4 Nm	5 Nm	20 Nm	20 Nm
Operating torque	Typical for 3-pole switch fuses			7 Nm	7 Nm	7 Nm	19 Nm	19 Nm

* = Utilization category B.

[1] Acc. to IEC 60957-2, IEC 60947-1, § 6.1.1. Minimum ambient temperature -5°C. Category B: -5°C...-35°C.

[2] Utilization category DC21-B.

[3] These values are given for guidance and may vary acc. to the motor manufacturer.

[4] Max. fuse body diam 52 mm.

[5] Max. fuse body diam 62 mm.

[6] Max. allowed knife dimension h is 21 mm

[7] Max. allowed knife dimension h is 27 mm

[8] OS2000DZ_ 200/250 A

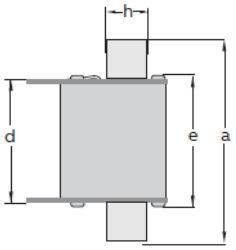

Manual operated switch fuses, IEC

Technical data for OS630...1250

Technical data according to IEC 60947-3

Switch type				OS_630_	OS_800_	OS_1250_
Rated insulation voltage and rated operational voltage AC-20 and DC-20	Pollution degree 3		50 Hz 1min.	1000 V	1000 V	1000 V
Dielectric strength				10 kV	10 kV	10 kV
Rated impulse withstand voltage				12 kV	12 kV	12 kV
Rated thermal current in ambient 35 °C and temporarily in 40 °C[1] / max. fuse power dissipation	In open air			630 A/60 W	800 A/65 W	1250 A/110 W
	In enclosure			570 A/50 W	720 A/55 W	1000 A/85 W
...with minimum cable cross section			Cu	2 x 185 mm²	2 x 240 mm²	2 x 400 mm²
Derating, mounting on wall horizontal fuses	In open air or ventilated enclosure			0 %	4 %	4 %
	Totally enclosed			5 %	8 %	8 %
Derating, mounting on 'ceiling'				10 %	10 %	10 %
Derating at 60 °C	In open air / in enclosure			20/20 %	20/20 %	20/20 %
Power loss / pole	With rated current, without fuse			46 W	75 W	75 W
Rated operational current AC-21A			≤ 500 V	630 A	800 A	1250 A [2]
			690 V	630 A	800 A	1250 A [2]
Rated operational current AC-22A			≤ 415 V	630 A	800 A	1250 A
			500 V	630 A	800 A	1250 A [2]
			690 V	630 A	800 A	1250 A [2]
Rated operational current AC-23A			≤ 415 V	630 A	800 A	1000 A
			500 V	630 A	800 A	1000 A [2]
			690 V	630 A	800 A	1000 A [2]
Rated operational current / poles in series DC-21A, DC-22A and DC-23A			≤ 220 V	630 A/1*	800 A/1*	
			440 V	630 A/2*	800 A/2*	
			660 V	630 A/3*	720 A/3*	
			750 V	630 A/4*	720 A/4*	
			880 V	630 A/4*	720 A/4*	
Rated operational power AC-23[3]			230 V	200 kW	250 kW	315 kW
			400 V	355 kW	450 kW	560 kW
			415 V	355 kW	450 kW	560 kW
			500 V	450 kW	560 kW	710 kW
			690 V	630 kW	710 kW	1000 kW
Rated breaking capacity AC-23			≤ 690 V	6400 A	6400 A	8000 A
Rated conditional short circuit current I_q (r.m.s.) and corresponding max. allowed cut-off current of fuse $\hat{i}_c$ The cut-off current $\hat{i}_c$ refers to values listed by fuse manufacturers (single phase test acc. to IEC60269)	I_q 80 kA, 415 V	Max allowed $\hat{i}_c$ Max OFA_ fuse size gG/aM		77 kA 800/800 A	77 kA 800/800 A	89 kA 1250/1250 A
	I_q 100 kA, 500 V	Max allowed $\hat{i}_c$ Max OFA_ fuse size gG/aM		83 kA 800/800 A	83 kA 800/800 A	105 kA 1250/-A
	I_q 80 kA, 690 V	Max allowed $\hat{i}_c$ Max OFA_ fuse size gG/aM Max BS fuse size gG/gM		55 kA 500/630 A	55 kA 500/630 A	88 kA 1000/1000 A 1250/- A [5]
	I_q 50 kA, 415 V	Max allowed $\hat{i}_c$ Max. BS fuse size gG/gM		67 kA	67 kA	90 kA
Rated short-time withstand current, 1s.	r.m.s. -value			18 kA	18 kA	40 kA
	Max. distance from switch frame to nearest busbar/cable support			150 mm	150 mm	150 mm
Rated capacitor power when no initial charge of the capacitor	The capacitor ratings of the switch-fuses are limited by the fuse links		400 V	250 kVAr	310 kVAr	440 kVAr
			415 V	270 kVAr	340 kVAr	460 kVAr
			500 V	300 kVAr	375 kVAr	550 kVAr
			690 V	450 kVAr	550 kVAr	750 kVAr
Mechanical endurance	Divide by two for operation cycles			10 000 Oper.	6000 Oper.	6000 Oper.
Fuse types, IEC 60269-2	DIN 43620			2-3 [4]	2-3 [4]	4-4a
	BS 88-2, 6			C1-C3	C1-C3	D1
	Size / distance of fuse-link bolts			M10/133, 184 mm	M10/133, 184 mm	2xM12/149 mm
Terminal tightening torque	Counter torque required			50-75 Nm	50-75 Nm	50-75 Nm
Fuse-links bolts tightening torque				M10:30 Nm M12:40 Nm	M10:30 Nm M12:40 Nm	M12:40 Nm
Operating torque	Typical for 3-pole switch fuses			38 Nm	38 Nm	65 Nm

* = Utilization category B.
[1] Acc. to IEC 60957-2, IEC 60947-1, § 6.1.1. Minimum ambient temperature -5°C. Category B: -5°C...-35°C.
[2] Category B.
[3] These values are given for guidance and may vary acc. to the motor manufacturer.
[4] Max. allowed knife dimension h is 35 mm
[5] For 2-pole switches max BS fuse gG 1000 A

Special connected switch fuses, IEC

Technical data for OS125...200

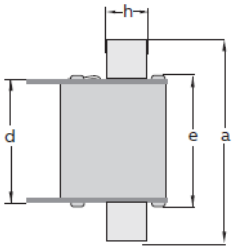

Technical data according to IEC 60947-3

Switch type				OS_125G	OS_160G	OS_200
Rated insulation voltage and rated operational voltage AC-20 and DC-20	Pollution degree 3		50 Hz 1min.	1000 V	1000 V	1000 V
Dielectric strength				10 kV	10 kV	10 kV
Rated impulse withstand voltage				8 kV	8 kV	12 kV
Rated thermal current in ambient 35 °C and temporarily 40 °C[1] / max. fuse power dissipation ...with minimum cable cross section				125 A/12 W	160 A/12 W	200 A/17 W
				50 mm²	70 mm²	95 mm²
Derating, mounting on wall horizontal fuses	In open air or ventilated enclosure			0 %	0 %	0 %
	Totally enclosed			5 %	5 %	5 %
Derating, mounting on ceiling				10 %	10 %	10 %
Derating at 60 °C	In open air / in enclosure			20/20 %	20/20 %	20/20 %
Power loss / pole	With rated current, without fuse		BB	5 W	9 W	8 W
			LR			11 W
Rated operational current AC-21A, AC-22A and AC-23A			Up to 690V	125 A	160 A	200 A
Rated operational current /poles in series DC-21A, DC-22A and DC-23A			48V	125 A/2	160 A/2	200 A/1
			110-220V	125 A/2	125 A/2*	200 A/1
			440V	125 A/4*(DC-21A)	125 A/4*(DC-21A)	200 A/2
			660V			200 A/3
			750V			180 A/4
			880V			180 A/4
Rated operational power AC-23[2]	The kW-ratings are accurate for three-phase 1500 R.P.M standard asynchronous motors.		230 V	37 kW	45 kW	60 kW
			400 V/415 V	55/55 kW	75/75 kW	100/110 kW
			500 V/690 V	75/110 kW	90/132 kW	140/180 kW
Rated breaking capacity in category AC-23			up to 690 V	1280 A	1280 A	1600 A
Rated breaking capacity/poles in series in category DC-23			up to 220V	640 A/2	640 A/2	
Rated conditional short-circuit current I_q (r.m.s.) and corresponding max. allowed cut-off current of fuse $\hat{i}_c$ The cut-off current $\hat{i}_c$ refers to values listed by fuse manufacturers[5] (single phase test acc. to IEC60269)	I_q 80 kA, 415 V	Max allowed $\hat{i}_c$ Max OFA_ fuse size gG/aM		23.5 kA 160/160 A	23.5 kA 160/160 A	
	I_q 100 kA, 500 V	Max allowed $\hat{i}_c$ Max OFA_ fuse size gG/aM		25.5 kA 160/160 A	25.5 kA 160/160 A	30 kA 200/200 A [6]
	I_q 50 kA, 690 V	Max allowed $\hat{i}_c$ Max OFA_ fuse size gG/aM		17.5 kA 125/160 A	17.5 kA 125/160 A	20 kA 160/- A
	I_q 80 kA, 690 V	Max allowed $\hat{i}_c$ Max OFA_ fuse size gG/aM		20.5 kA 125/160 A	20.5 kA 125/160 A	25 kA 160/- A [6]
Rated short-time withstand current, 1s.	r.m.s. -value			5 kA	5 kA	8 kA
	Max. distance from switch frame to nearest busbar/cable support					150 mm
Rated capacitor power when no initial charge of the capacitor	The capacitor ratings of the switch-fuses are limited by the fuse links		400 V/415 V	50/55 kVAr	60/65 kVAr	
			690 V	90 kVAr	100 kVAr	
Mechanical endurance	Divide by two for operation cycles			20 000 Oper.	20 000 Oper.	20 000 Oper.
Fuse types, IEC 60269-2	DIN 43620			000, 00 [7] [9]	000, 00 [7] [9]	0 [8]
	NFC 63210, 63211			22x58		
	BS 88-2, -6 distance of fuse-link bolts			A2A4[4] M5/73 mm M8/94 mm	A2-A4[4] M5/73 mm M8/94 mm	B1-B4 M6/111 mm
Terminal tightening torque	Counter torque required			15-22 Nm	15-22 Nm	M8:15-22 Nm [3], M10:30-44 Nm
Fuse-links bolts tightening torque				M5:3.5 Nm M8:5 Nm	M5:3 Nm M8:5 Nm	4 Nm 5 Nm
Operating torque	Typical for 3 and 4-pole switches			7 Nm	7 Nm	7 Nm

* = Utilization category B.
[1] Acc. to IEC 60947-1, § 6.1.1. Minimum ambient temperature -5°C. Category B: -5°C...-35°C.
[2] Some fuse links limit these figures further. Starting current charasteristics must be considered separately.
[3] Side terminals tightening torque max 15 Nm.
[4] Max fuse body diam. 32 mm.
[5] BS fuse manufacturers covered by this table ABB, MEM, Bussmann, GEC.
[6] 3-pole types only.
[7] Max. allowed knife dimension h is 15 mm.
[8] Max. allowed knife dimension h is 21 mm.
[9] For solid link size 00 the a dimension must be min. 80.0 mm.

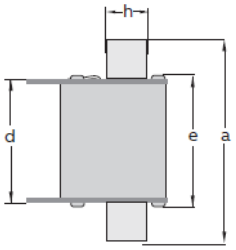

Special connected switch fuses, IEC

Technical data for OS250...400

Technical data according to IEC 60947-3

Switch type				OS_250	OS_315	OS_400
Rated insulation voltage and rated operational voltage AC-20 and DC-20	Pollution degree 3		50 Hz 1min.	1000 V	1000 V	1000 V
Dielectric strength				10 kV	10 kV	10 kV
Rated impulse withstand voltage				12 kV	12 kV	12 kV
Rated thermal current in ambient 35 °C and temporarily 40 °C[1] / max. fuse power dissipation ...with minimum cable cross section				250 A/23 W 120 mm²	315 A/32 W 185 mm²	400 A/45 W 240 mm²
Derating, mounting on wall horizontal fuses	In open air or ventilated enclosure			0 %	0 %	0 %
	Totally enclosed			5 %	5 %	5 %
Derating, mounting on ceiling				10 %	10 %	10 %
Derating at 60 °C	In open air / in enclosure			20/20 %	20/20 %	20/20 %
Power loss / pole	With rated current, without fuse		BB	13 W	19 W	30 W
			LR	17 W	25 W	40 W
Rated operational current AC-21A, AC-22A and AC-23A			Up to 690V	215 A	315 A	400 A
Rated operational current /poles in series DC-21A, DC-22A and DC-23A			48V	250 A/1	315 A/2	400 A/2
			110-220V	250 A/1	315 A/2	400 A/2
			440V	250 A/2	315 A/3*	400 A/3
			660V 750V	250 A/3 230 A/4	315 A/4* 315 A/4*	400 A/4* 400 A/4*
			880V	230 A/4		
Rated operational power AC-23[2]	The kW-ratings are accurate for three-phase 1500 R.P.M standard asynchronous motors.		230 V	75 kW	100 kW	110 kW
			400 V/415 V	132/140 kW	170/180 kW	220/230 kW
			500 V/690 V	170/240 kW	220/295 kW	280/335 kW
Rated breaking capacity in category AC-23			up to 690 V	2000 A	3200 A	3200 A
Rated conditional short-circuit current I_p (r.m.s.) and corresponding max. allowed cut-off current $\hat{i}_c$ The cut-off current $\hat{i}_c$ refers to values listed by fuse manufacturers[6] (single phase test acc. to IEC60269)	I_q 65 kA, 500V	Max allowed $\hat{i}_c$ Max OFA_ fuse size gG/aM		32,5 kA 250/- A		40,5 kA 400/- A
	I_q 100 kA, 500 V	Max allowed $\hat{i}_c$ Max OFA_ fuse size gG/aM		37,5 kA 250/250 A [7]		63,5 kA 500/500 A [7] [8]
	I_q 50 kA, 690 V	Max allowed $\hat{i}_c$ Max OFA_ fuse size gG/aM		29,5 kA 250/- A		32 kA 355/- A
	I_q 80 kA, 690 V	Max allowed $\hat{i}_c$ Max OFA_ fuse size gG/aM		32,5 kA 200/250 A [7]		38 kA 355/400 A [7]
	I_q 50 kA, 415 V	Max allowed $\hat{i}_c$ Max BS fuse size gG/gM		26 kA 250/- A	28 kA 315/- A	34 kA 400/- A
	I_q 80 kA, 415 V	Max allowed $\hat{i}_c$ Max BS fuse size gG/gM		30 kA 250/200M250 A [7]	50 kA 400/400M500 A [7]	50 kA 400/400M500 A [7]
	I_q 50 kA, 690 V	Max allowed $\hat{i}_c$ Max BS fuse size gG/gM		28 kA 250/- A	30 kA 315/- A	38 kA 400/- A
	I_q 80 kA, 690 V	Max allowed $\hat{i}_c$ Max BS fuse size gG/gM		28 kA 250/200M250 A [7]	48 kA 400/400M450 A [7]	48 kA 400/400M450 A [7]
Rated short-time withstand current, 1s.	r.m.s. -value Max. distance from switch frame to nearest busbar/cable support			8 kA 150 mm	14 kA 150 mm	14 kA 150 mm
Rated capacitor power when no initial charge of the capacitor	The capacitor ratings of the switch-fuses are limited by the fuse links		400 V/415 V			
			690 V			
Mechanical endurance	Divide by two for operation cycles			20 000 Oper.	16 000 Oper.	16 000 Oper.
Fuse types, IEC 60269-2	DIN 43620			0-1 [9]		0-2 [10]
	BS 88-2, -6 Size / distance of fuse-link bolts			B1-B3[3] M8/111 mm	B1-B4[4] M8/111 mm	B1-B4[4] M8/111 mm
Terminal tightening torque	Counter torque required			M8:15-22 Nm [5], M10:30-44 Nm	M8:15-22 Nm [5], M10:30-44 Nm	M8:15-22 Nm [5], M10:30-44 Nm
Fuse-links bolts tightening torque			BB	5 Nm	20 Nm	20 Nm
			LR	5 Nm	20 Nm	20 Nm
Operating torque	Typical for 3 and 4-pole switch			7 Nm	19 Nm	19 Nm

* = Utilization category B.
[1] Acc. to IEC 60947-1, § 6.1.1. Minimum ambient temperature -5°C. Category B: -5°C...-35°C.
[2] Some fuse links limit these figures further. Starting current charasteristics must be considered separately.
[3] Max fuse body diam 52 mm.
[4] Max fuse body diam 62 mm.
[5] Side terminals tightening torque max 15 Nm.
[6] BS fuse manufacturers covered by this table ABB, MEM, Bussmann, GEC.
[7] 3-poles type only.
[8] Plug in types: fuse size gG/aM: 400/400.
[9] Max. allowed knife dimension h is 21 mm.
[10] Max. allowed knife dimension h is 27 mm.

Motorized switch fuses, IEC

Technical data for motor operators OSM32...250

Technical data for motor operators OSM according to IEC 60947

Switch type			**32...63**	**100...160**	**200...250**
Rated operational voltage U_e	Pollution degree 3	50/60 Hz		220 - 240 V AC	220 - 240 V AC
Operating voltage range			0.85 - 1.1 x U_e	0.85 - 1.1 x U_e	0.85 - 1.1 x U_e
Operating time[1)]	90° I - 0, 0 - I	220-240VAC	0.5 - 1.0 s	0.5 - 1.0 s	0.5 - 1.0 s
Nominal current I_n[1)]		220-240VAC	0.3 A	0.3 A	0.3 A
Current Inrush[1)]		220-240VAC	1.5 A	1.5 A	1.5 A
Overload fuse	Type / I_n / Capacity	220-240VAC	T / 315 mA / H	T / 315 mA / H	T / 315 mA / H
	Size		5x20 mm	5x20 mm	5x20 mm
Operating rate	Cycle 0-I-0				
	Max. continuous	220-240VAC	1 cycles / min	1 cycles / min	1 cycles / min
	Max. short-time ≤ 10 cycles	220-240VAC	10 cycles / min	10 cycles / min	10 cycles / min
Overvoltage category			III	III	III
Rated impulse withstand voltage U_{imp}			4 kV	4 kV	4 kV
Dielectric strength		50 Hz 1 min.	1.5 kV	1.5 kV	1.5 kV
Impulse command		Min. impulse			
		duration		100 ms	100 ms
Terminals	Voltage supply wiring for U_e		PE - N -L	PE - N -L	PE - N -L
	Cross section	solid/stranded	1.5 - 2.5 mm²	1.5 - 2.5 mm²	1.5 - 2.5 mm²
	Short-circuit protection device	max.fuse size	16 A	16 A	16 A
	Push-button control	C - I - O	no SELV	no SELV	no SELV
	Cross section	solid/stranded	1.5 - 2.5 mm²	1.5 - 2.5 mm²	1.5 - 2.5 mm²
	Maximum cable length		100 m	100 m	100 m
State information of locking			no SELV	no SELV	no SELV
	Handle attached or motor opertor locked	11-12-14 (C/O)	5A/250V cosϕ=1	5A/250V cosϕ=1	5A/250V cosϕ=1
	Locking motor operator	23-24 (NO)	5A/250V cosϕ=1	5A/250V cosϕ=1	5A/250V cosϕ=1
	Short-circuit protection device	MCB type and size	C/2A	C/2A	C/2A
Protection degree			IP20	IP20	IP20
Operating temperature			-25...+55 °C	-25...+55 °C	-25...+55 °C
Transportation and storage temperature			-40...+70 °C	-40...+70 °C	-40...+70 °C
Max. altitude			2000 m	2000 m	2000 m

[1)] Under nominal conditions.

Motorized switch fuses, IEC

Technical data for motor operators OSM315...1250

Technical data for motor operators OSM according to IEC 60947

Switch type			**315...400**	**630...800**	**1250**
Rated operational voltage U_e	Pollution degree 3	50/60 Hz	220 - 240 V AC	220 - 240 V AC	220 - 240 V AC
Operating voltage range			0.85 - 1.1 x U_e	0.85 - 1.1 x U_e	0.85 - 1.1 x U_e
Operating time[1)]	90° I - 0, 0 - I	220-240VAC	0.5 - 1.2 s	0.5 - 1.5 s	0.8 - 2.0 s
Nominal current I_n[1)]		220-240VAC	0.5 A	0.9 A	1.4 A
Current Inrush[1)]		220-240VAC	2.5 A	4 A	10 A
Overload fuse	Type / I_n / Capacity	220-240VAC	T / 500 mA/ H	T / 1000 mA/ H	T / 2000 mA/ H
	Size		5x20 mm	5x20 mm	5x20 mm
Operating rate	Cycle 0 - I - 0				
	Max. continuous	220-240VAC	1 cycles / min	1 cycles / min	0.5 cycles / min
	Max. short-time ≤ 10 cycles	220-240VAC	10 cycles / min	10 cycles / min	5 cycles / min
Overvoltage category			III	III	
Rated impulse withstand voltage U_{imp}			4 kV	4 kV	
Dielectric strength		50 Hz 1 min.	1.5 kV	1.5 kV	
Impulse command		Min. impulse			
		duration	100 ms	100 ms	
Terminals	Voltage supply wiring for U_e		PE - N - L	PE - N - L	
	Cross section	solid/stranded	1.5 - 2.5 mm^2	1.5 - 2.5 mm^2	1.5 - 2.5 mm^2
	Short-circuit protection device	max.fuse size	16 A	16 A	16 A
	Push-button control	C - I - O	no SELV	no SELV	no SELV
	Maximum cable length		100 m	100 m	100 m
State information of locking			no SELV	no SELV	no SELV
	Handle attached or motor operator locked	11-12-14 (C/O)	5A/250V cosϕ=1	5A/250V cosϕ=1	5A/250V cosϕ=1
	Locking motor operator	23-24 (NO)	5A/250V cosϕ=1	5A/250V cosϕ=1	5A/250V cosϕ=1
	Short-circuit protection device	MCB type and size	C/2A	C/2A	C/2A
Protection degree			IP20	IP20	IP20
Operating temperature			-25...+55 °C	-25...+55 °C	-25...+55 °C
Transportation and storage temperature			-40...+70 °C	-40...+70 °C	-40...+70 °C
Max. altitude			2000 m	2000 m	2000 m

[1)] Under nominal conditions.

Fusible disconnect switches, UL/CSA

Technical data for OS30...200

			OS Mini 30	OS_60G	OS_100G	OS_200
Approvals*)			-	UL98, IEC 2 pole	UL98, IEC 2 pole	UL98, IEC 2 pole
			UL98, IEC 3 pole	UL98, IEC 3 pole	UL98, IEC 3 pole	UL98, IEC 3 pole
			UL98, IEC 4 pole	UL98, IEC 4 pole	UL98, IEC 4 pole	UL98, IEC 4 pole
Technical data according to UL/CSA						
General purpose amp rating	pf= 0.7...0.8	up to 40ºC	30 A	60 A	100 A	200 A
Max. operating voltage			600 VAC	600 VAC	600 VAC	600 VAC
			250 VDC	250 VDC	250 VDC	250 VDC
Max. horsepower rating/ motor FLA current	pf= 0.4...0.5 Three phase	240 V	7.5 HP/22.0 A	15 HP/42.0 A	30 HP/80.0 A	60 HP/154.0 A
		480 V	15 HP/21.0 A	30 HP/40.0 A	60 HP/77.0 A	125 HP/156.0 A
		600 V	20 HP/22.0 A	50 HP/52.0 A	75 HP/77.0 A	150 HP/144.0 A
	Single phase	120 V	2 HP/24.0 A			
		240 V	3 HP/17.0 A			
Short circuit rating with fuse, 3 and 4-pole types	Short circuit rating at 600VAC		200 kA	200 kA	200 kA	200 kA
Fuse	Max. fuse rating		30 A	60 A	100 A	200 A
	Type of fuse		J/CC	J	J	J
Min. electrical endurance	pf= 0.75...0.8	operation cycles	6 000	6 000	6 000	6 000
Terminal lug kits			Integral	Integral	OZXA-24	OZXA-200
Wire range			#18-8 AWG	#14-4 AWG	#14-2/0 AWG	#4-300 MCM
Torque	Wire tightening		17 lb.in	30/35 lb.in 3)	120 lb.in	200 lb.in
	Lug mounting		N/A	N/A	50 lb.in	72 lb.in
Technical data according to IEC 60947-3						
Rated insulation voltage	Pollution degree 3	50 Hz 1min.	1 000 V	1 000 V	1 000 V	1 000 V
Dielectric strength			10 kV	10 kV	10 kV	10 kV
Rated impulse withstand voltage			12 kV			12 kV
Rated thermal current in ambient 40 °C / max. fuse power dissipation1) ...with minimum cable cross section	In open air		32 A/3.5 W	63 A/7.5 W	160 A/12 W	200 A/17 W
	In enclosure		32 A/33.5 W	63 A/7.5 W	160 A/10,135 A/12 W	200 A/15 W
		Cu	6 mm^2	16 mm^2	70 mm^2	95 mm^2
Derating, mounting on wall horizontal fuses	In open air or ventilated enclosure		0 %	0 %	0 %	0 %
	Totally enclosed		5 %	5 %	5 %	5 %
Derating, mounting on ceiling			10 %	10 %	10 %	10 %
Derating at 60 °C	In open air / in enclosure		20/20 %	20/20 %	20/20 %	20/20 %
Power loss / pole	With rated current, without fuse		2 W	4 W	9 W	8 W
Rated operational current AC-23A		Up to 500 V	32 A	63 A	160 A	200 A
		690 V	32 A	63 A	160 A	200 A
Rated operational power AC-232)	The kW-ratings are accurate for three-phase 1500 R.P.M standard asynchronous motors.	230 V	7.5 kW	18.5 kW	45 kW	60 kW
		400 V	15 kW	30 kW	75 kW	110 kW
		415 V	15 kW	30 kW	75 kW	110 kW
		500 V	18.5 kW	37 kW	90 kW	132 kW
		690 V	22 kW	55 kW	132 kW	200 kW
Rated breaking capacity in category AC-23		up to 500 V	256 A	504 A	1280 A	1600 A
		690 V	256 A	504 A	1280 A	1600 A
Rated short-time withstand current, 1s.	r.m.s. -value		1 kA	2.5 kA	5 kA	8 kA
Built-in terminal size		Cu	0.75...10 mm^2	2.5...25 mm^2		
Fuse-links bolts tightening torque					4 Nm	4 Nm

*) UL listed disconnects are also listed under CSA requirements.
1) Acc. to IEC 60947-1, § 6.1.1. Minimum ambient temperature -5°C. Category B: -5°C...-35°C.
2) Some fuse links limit these figures further. Starting current charasteristics must be considered separately.
3) 30 lb.in with cable size #14-10, 35 lb.in with cable size #8-4.tw

Fusible disconnect switches, UL/CSA

Technical data for OS400...1200

			OS400	OS600	OS800	OS1200
Approvals*)			UL98, IEC 2 pole	UL98, IEC 2 pole	UL98, IEC 2 pole	UL98, IEC 2 pole
			UL98, IEC 3 pole	UL98, IEC 3 pole	UL98, IEC 3 pole	UL98, IEC 3 pole
			UL98, IEC 4 pole	UL98, IEC 4 pole	UL98, IEC 4 pole	UL98, IEC 4 pole

Technical data according to UL/CSA

General purpose amp rating	pf= 0.7...0.8	up to 40ºC	400 A	600 A	800 A	1200 A
Max. operating voltage			600 VAC	600 VAC	600 VAC	600 VAC
			250 VDC	250 VDC	250 VDC	250 VDC
Max. horsepower rating/ motor FLA current	pf= 0.4...0.5 Three phase	240 V	125.0 HP/312.0 A	200 HP/480.0 A	250 HP/602.0 A	
		480 V	250.0 HP/302.0 A	400 HP/477.0 A	500 HP/590.0 A	
		600 V	350.0 HP/336.0 A	500 HP/472.0 A	500 HP/472.0 A	
	Single phase	120 V				
		240 V				
Short circuit rating with fuse, 3 and 4-pole types	Short circuit rating at 600VAC		200 kA	200 kA	200 kA	200 kA
Fuse	Max. fuse rating		400 A	600 A	800 A	1200 A
	Type of fuse		J	J	L	L
Min. electrical endurance	pf= 0.75...0.8	operation cycles	1000	1000	500	500
Terminal lug kits			OZXA-400	OZXA-800	OZXA-800	OZXA-1200
Wire range			#2-600MCM	(2)#2-600MCM	(2)#2-600MCM	(4)#2-600MCM
Torque	Wire tightening		375 lb.in	500 lb.in	500 lb.in	500 lb.in
	Lug mounting		240 lb.in	480 lb.in	480 lb.in	480 lb.in

Technical data according to IEC 60947-3

Rated insulation voltage	Pollution degree 3	50 Hz 1min.	1 000 V	1 000 V	1 000 V	1 000 V
Dielectric strength			10 kV	10 kV	10 kV	10 kV
Rated impulse withstand voltage			12 kV	12 kV	12 kV	12 kV
Rated thermal current in ambient 40 °C / max. fuse power dissipation[1] ...with minimum cable cross section	In open air		400 A/45 W	630 A/60 W	800 A/65 W	1250 A/110 W
	In enclosure		400 A/30 W	570 A/50 W	720 A/55 W	1000 A/85 W
		Cu	240 mm²	2x185 mm²	2x240 mm²	2x400 mm²
Derating, mounting on wall horizontal fuses	In open air or ventilated enclosure		0 %	0 %	4 %	4 %
	Totally enclosed		5 %	5 %	8 %	8 %
Derating, mounting on ceiling			10 %	10 %	10 %	10 %
Derating at 60 °C	In open air / in enclosure		20/20 %	20/20 %	20/20 %	20/20 %
Power loss / pole	With rated current, without fuse		30 W	46 W	75 W	75 W
Rated operational current AC-23A		Up to 500 V	400 A	630 A	800 A	1000 A [3]
		690 V	400 A	630 A	800 A	1000 A [3]
Rated operational power AC-23[2]	The kW-ratings are accurate for three-phase 1500 R.P.M standard asynchronous motors.	230 V	132 kW	200 kW	250 kW	315 kW [3]
		400 V	220 kW	355 kW	450 kW	560 kW [3]
		415 V	230 kW	355 kW	450 kW	560 kW [3]
		500 V	280 kW	450 kW	560 kW	710 kW [3]
		690 V	400 kW	630 kW	710 kW	1000 kW [3]
Rated breaking capacity in category AC-23		up to 500 V	3200 A	6400 A	6400 A	8000 A
		690 V	3200 A	6400 A	6400 A	8000 A
Rated short-time withstand current, 1s.	r.m.s. -value		14 kA	20 kA	20 kA	
Built-in terminal size		Cu				
Fuse-links bolts tightening torque			30 Nm	40 Nm	40 Nm	40 Nm

*) UL listed disconnects are also listed under CSA requirements.
1) Acc. to IEC 60947-1, § 6.1.1. Minimum ambient temperature -5°C. Category B: -5°C...-35°C.
2) Some fuse links limit these figures further. Starting current charasteristics must be considered separately.
3) Utilization category B.



Switch fuses
Ordering information

Switch fuses DIN type	28
Switch fuses BS type	44
Switch fuses NFC type	64
Fusible disconnect switches, UL/CSA	68
Selection overview	78
Accessories	84


135 t

Switch fuses DIN type
Ordering information

Manual operated switch fuses, 32…40 A	29
Manual operated switch fuses, 63 A	30
Manual operated switch fuses, 125 A	31
Manual operated switch fuses, 160 A	32
Manual operated switch fuses, 200 A	33
Manual operated switch fuses, 250 A	34
Manual operated switch fuses, 400 A	35
Manual operated switch fuses, 630 A	36
Manual operated switch fuses, 800 A	37
Manual operated switch fuses, 1250 A	38
Special connected switch fuses, 125…160 A	39
Special connected switch fuses, 200…400 A	40
Motorized switch fuses, 32…1250 A	41

Manual operated switch fuses, IEC

Ordering information for DIN-type, 32...40 A



OS32...63GD02P



OS32...63GD04N2P



OS32...63GD03K



OS32...63GD04N2K



OS32...63GDS30K



OS32...63GDS40N2K

Manual operated switch fuses, DIN-type, 32...40 A
Protected tunnel terminals, IP20. Mechanism located between the poles. The handles are IP65 protected, padlockable in the OFF-position and with door interlock in the ON-position.

G = Gamma range switch fuses from 32 to 160 Amperes
F = OS Mini range switch fuses 40 Amperes

N2 = Non-fused switched neutral on the right side
F = Fused switched neutral

Front operated

Rated current [A]	Fuse size	Number of poles	Type	Order number
Shaft and handle not included				
32	000	2	OS32GD02	1SCA116776R1001
32	000	3	OS32GD03	1SCA115188R1001
32	000	4	OS32GD04N2	1SCA115192R1001
32	000	4	OS32GD04F	1SCA115195R1001
40	000	3	OS40FD12000-2	1SCA108921R1001
40	000	4	OS40FD22000N1-2	1SCA108940R1001
With 161 mm shaft and external handle OHB45J6				
32	000	2	OS32GD02P	1SCA116714R1001
32	000	3	OS32GD03P	1SCA115189R1001
32	000	4	OS32GD04N2P	1SCA115193R1001
32	000	4	OS32GD04FP	1SCA115196R1001
With 150 mm shaft and external handle OHB65J6				
40	000	3	OS40FD12000	1SCA108914R1001
40	000	4	OS40FD22000N1	1SCA108938R1001
With direct mount handle OSV200BK				
32	000	2	OS32GD02K	1SCA122905R1001
32	000	3	OS32GD03K	1SCA116733R1001
32	000	4	OS32GD04N2K	1SCA116734R1001
32	000	4	OS32GD04FK	1SCA116737R1001

Side operated

Shaft and handle not included				
32	000	3	OS32GDS30	1SCA115963R1001
32	000	4	OS32GDS40N2	1SCA116046R1001
32	000	4	OS32GDS40F	1SCA116755R1001
40	000	3	OS40FDS30000-2	1SCA108945R1001
With 70 mm shaft and external handle OHB65J6				
40	000	3	OS40FDS30000	1SCA108942R1001
40	000	4	OS40FDS40000N1	1SCA108954R1001
With direct mount handle OHB65D6				
32	000	3	OS32GDS30K	1SCA115929R1001
32	000	4	OS32GDS40N2K	1SCA116402R1001

Manual operated switch fuses, IEC

Ordering information for DIN-type, 63 A



OS32...63GD02P



OS32...63GD04N2P



OS32...63GD03K



OS32...63GD04N2K



OS32...63GDS30K



OS32...63GDS40N2K

Manual operated switch fuses, DIN-type, 63 A
Protected tunnel terminals, IP20. Mechanism located between the poles. The handles are IP65 protected, padlockable in the OFF-position and with door interlock in the ON-position.

G = Gamma range switch fuses from 32 to 160 Amperes

N2 = Non-fused switched neutral on the right side
F = Fused switched neutral

Front operated

Rated current [A]	Fuse size	Number of poles	Type	Order number
Shaft and handle not included				
63	000	2	OS63GD02	1SCA116777R1001
63	000	3	OS63GD03	1SCA115206R1001
63	000	4	OS63GD04N2	1SCA115208R1001
63	000	4	OS63GD04F	1SCA115225R1001
With 161 mm shaft and external handle OHB45J6				
63	000	2	OS63GD02P	1SCA116715R1001
63	000	3	OS63GD03P	1SCA115207R1001
63	000	4	OS63GD04N2P	1SCA115209R1001
63	000	4	OS63GD04FP	1SCA115228R1001
With direct mount handle OSV200BK				
63	000	2	OS63GD02K	1SCA122906R1001
63	000	3	OS63GD03K	1SCA116738R1001
63	000	4	OS63GD04N2K	1SCA116876R1001
63	000	4	OS63GD04FK	1SCA116739R1001

Side operated

Shaft and handle not included				
63	000	3	OS63GDS30	1SCA116007R1001
63	000	4	OS63GDS40N2	1SCA116047R1001
63	000	4	OS63GDS40F	1SCA116877R1001
With direct mount handle OHB65D6				
63	000	3	OS63GDS30K	1SCA115931R1001
63	000	4	OS63GDS40N2K	1SCA116403R1001

Manual operated switch fuses, IEC

Ordering information for DIN-type, 125 A



OS125...160GD03P



OS125...160GD03K

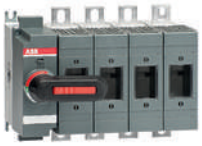

OS125...160GD04FK



OS125...160GDS40N2K

Manual operated switch fuses, DIN-type, 125 A
Including terminal bolt set M8X25. The handles are IP65 protected, padlockable in the OFF-position and with door interlock in the ON-position.

G = Gamma range switch fuses from 32 to 160 Amperes

F = Fused switches neutral
N2 = Non-fused switched neutral on the right side

Front operated

Rated current [A]	Fuse size	Number of poles	Type	Order number
Shaft and handle not included				
125	000, 00	2	OS125GD02	1SCA116873R1001
125	000, 00	3	OS125GD03	1SCA115638R1001
125	000, 00	4	OS125GD04N2	1SCA115876R1001
125	000, 00	4	OS125GD04F	1SCA115685R1001
With 161 mm shaft and external handle OHB65J6				
125	000, 00	2	OS125GD02P	1SCA116716R1001
125	000, 00	3	OS125GD03P	1SCA115639R1001
125	000, 00	4	OS125GD04N2P	1SCA115877R1001
125	000, 00	4	OS125GD04FP	1SCA115686R1001
With direct mount handle OSV200BK				
125	000, 00	2	OS125GD02K	1SCA122908R1001
125	000, 00	3	OS125GD03K	1SCA116878R1001
125	000, 00	4	OS125GD04N2K	1SCA116740R1001
125	000, 00	4	OS125GD04FK	1SCA116741R1001

Side operated

Shaft and handle not included				
125	000, 00	3	OS125GDS30	1SCA115966R1001
125	000, 00	4	OS125GDS40N2	1SCA115967R1001
125	000, 00	4	OS125GDS40F	1SCA116756R1001
With direct mount handle OHB65D6				
125	000, 00	3	OS125GDS30K	1SCA115933R1001
125	000, 00	4	OS125GDS40N2K	1SCA115934R1001

Recommended accessories: Shrouds
Snap-on mounting, grey plastic, IP 3X from front. Transparent shrouds available on request.
For more details see page 86.

Suitable for switches	Description	Number of poles	Type	Order number
OS/OSM100G...160G	Long type	3	OSS160GG1L/3	1SCA114764R1001
OS/OSM100G...160G	Short type	3	OSS160GG1S/3	1SCA114766R1001
OS/OSM100G...160G	Long type	4	OSS160GG1L/4	1SCA114765R1001
OS/OSM100G...160G	Short type	4	OSS160GG1S/4	1SCA114767R1001

Manual operated switch fuses, IEC

Ordering information for DIN-type, 160 A



OS125...160GD03P



OS125...160GD03K



OS125...160GD04FK



OS125...160GDS40N2K

Manual operated switch fuses, DIN-type, 160 A

Protected tunnel terminals, IP20. Mechanism located between the poles. The handles are IP65 protected, padlockable in the OFF-position and with door interlock in the ON-position.

G = Gamma range switch fuses from 32 to 160 Amperes

N2 = Non-fused switched neutral on the right side
F = Fused switched neutral

Front operated

Rated current [A]	Fuse size	Number of poles	Type	Order number
Shaft and handle not included				
160A	000, 00	2	OS160GD02	1SCA116778R1001
160A	000, 00	3	OS160GD03	1SCA114221R1001
160A	000, 00	4	OS160GD04N2	1SCA115881R1001
160A	000, 00	4	OS160GD04F	1SCA115401R1001
With 161 mm shaft and external handle OHB65J6				
160A	000, 00	2	OS160GD02P	1SCA116717R1001
160A	000, 00	3	OS160GD03P	1SCA115399R1001
160A	000, 00	4	OS160GD04N2P	1SCA115882R1001
160A	000, 00	4	OS160GD04FP	1SCA115402R1001
With direct mount handle OSV200BK				
160A	000, 00	2	OS160GD02K	1SCA122910R1001
160A	000, 00	3	OS160GD03K	1SCA116742R1001
160A	000, 00	4	OS160GD04N2K	1SCA116743R1001
160A	000, 00	4	OS160GD04FK	1SCA116880R1001

Side operated

Shaft and handle not included				
160A	000, 00	3	OS160GDS30	1SCA115968R1001
160A	000, 00	4	OS160GDS40N2	1SCA115969R1001
160A	000, 00	4	OS160GDS40F	1SCA116757R1001
With direct mount handle OHB65D6				
160A	000, 00	3	OS160GDS30K	1SCA115935R1001
160A	000, 00	4	OS160GDS40N2K	1SCA115939R1001

Recommended accessories: Shrouds

Snap-on mounting, grey plastic, IP 3X from front. Transparent shrouds available on request.
For more details see page 86.

Suitable for switches	Description	Number of poles	Type	Order number
OS/OSM100G...160G	Long type	3	OSS160GG1L/3	1SCA114764R1001
OS/OSM100G...160G	Short type	3	OSS160GG1S/3	1SCA114766R1001
OS/OSM100G...160G	Long type	4	OSS160GG1L/4	1SCA114765R1001
OS/OSM100G...160G	Short type	4	OSS160GG1S/4	1SCA114767R1001

Manual operated switch fuses, IEC

Ordering information for DIN-type, 200 A



OS200DZ04N2P



OS200...250D03N3P



OS200...250D02P



OS200...250D03K



OS200...250DS40FK



OSS200G1L



OSS200G1S

Manual operated switch fuses, DIN-type, 200 A

Including terminal bolt set M8X25. Mechanism located at the end of the switch. The handles are IP65 protected, padlockable in the OFF-position and with door interlock in the ON-position.

F = Fuse switched neutral
N2 = Non-fused switched neutral on the right side

Front operated

Rated current [A]	Fuse size	Number of poles	Type	Order number
Shaft and handle not included				
200	0	2	OS200D02	1SCA022759R9140
200	0	3	OS200D03	1SCA022715R2240
200	00	3	OS200DZ03	1SCA022797R3520
200	0	4	OS200D04N2	1SCA022717R3670
200	0	4	OS200D04F	1SCA022725R8230
200	00	4	OS200DZ04N2	1SCA022819R4110
With 161 mm shaft and external handle OHB65J6				
200	0	2	OS200D02P	1SCA022759R9220
200	0	3	OS200D03P	1SCA022709R9500
200	00	3	OS200DZ03P	1SCA022797R3440
200	0	4	OS200D04N2P	1SCA022709R9680
200	0	4	OS200D04FP	1SCA022725R4750
200	00	4	OS200DZ04N2P	1SCA022820R9230
With direct mount handle OSV200BK				
200	0	3	OS200D03K	1SCA022764R7130
200	0	4	OS200D04N2K	1SCA022768R7430
200	0	4	OS200D04FK	1SCA022783R1220

Side operated

Shaft and handle not included				
200	0	3	OS200DS30	1SCA022871R1370
200	0	4	OS200DS40N2	1SCA022871R1700
200	0	4	OS200DS40F	1SCA022871R1530
With direct mount handle OHB65D6				
200	0	3	OS200DS30K	1SCA022871R1450
200	0	4	OS200DS40N2K	1SCA022871R1880
200	0	4	OS200DS40FK	1SCA022871R1610

Recommended accessories: Shrouds

Snap-on mounting, grey plastic, IP 3X from front. Transparent shrouds available on request. For more details see page 86.

Suitable for switches	Description	Number of poles	Type	Order number
OS/OSM200	Long type	3	OSS200G1L/3	1SCA022731R8910
OS/OSM200	Short type	3	OSS200G1S/3	1SCA022732R0130
OS/OSM200	Long type	4	OSS200G1L/4	1SCA022731R9040
OS/OSM200	Short type	4	OSS200G1S/4	1SCA022732R0050

Manual operated switch fuses, IEC

Ordering information for DIN-type, 250 A



OS200...250D03N3P



OS200...250D02P



OS200...250D03K



OS200...250DS40FK



OSS250G1L

Manual operated switch fuses, DIN-type, 250 A

Including terminal bolt set M10X30. The handles are IP65 protected, padlockable in the OFF-position and with door interlock in the ON-position.

F = Fused switched neutral
N2 = Non-fused switched neutral on the right side

Front operated

Rated current [A]	Fuse size	Number of poles	Type	Order number
Shaft and handle not included				
250	0-1	2	OS250D02	1SCA022746R7740
250	0-1	3	OS250D03	1SCA022720R7080
250	0-1	4	OS250D04N2	1SCA022725R0500
250	0-1	4	OS250D04F	1SCA022727R0360
With 161 mm shaft and external handle OHB65J6				
250	0-1	2	OS250D02P	1SCA022760R0170
250	0-1	3	OS250D03P	1SCA022719R0090
250	0-1	4	OS250D04N2P	1SCA022719R2380
250	0-1	4	OS250D04FP	1SCA022726R8620
With direct mount handle OSV200BK				
250	0-1	2	OS250D02K	1SCA101367R1001
250	0-1	3	OS250D03K	1SCA022763R6360
250	0-1	4	OS250D04N2K	1SCA022763R6440
250	0-1	4	OS250D04FK	1SCA022783R1310

Side operated

Shaft and handle not included				
250	0-1	3	OS250DS30	1SCA022871R2180
250	0-1	4	OS250DS40N2	1SCA022871R2510
250	0-1	4	OS250DS40F	1SCA022871R2340
With direct mount handle OHB65D6				
250	0-1	3	OS250DS30K	1SCA022871R2260
250	0-1	4	OS250DS40N2K	1SCA022871R2690
250	0-1	4	OS250DS40FK	1SCA022871R2420

Recommended accessories: Shrouds

Snap-on mounting, grey plastic, IP 3X from front. Transparent shrouds available on request.
For more details see page 86.

Suitable for switches	Description	Number of poles	Type	Order number
OS/OSM250	Long type	3	OSS250G1L/3	1SCA022731R9390
OS/OSM250	Short type	3	OSS250G1S/3	1SCA022731R9550
OS/OSM250	Long type	4	OSS250G1L/4	1SCA022731R9470
OS/OSM250	Short type	4	OSS250G1S/4	1SCA022731R9630

Manual operated switch fuses, IEC

Ordering information for DIN-type, 400 A



OS400D04FP



OS400D03K



OS400DS40FK

Manual operated switch fuses, DIN-type, 400 A

Including terminal bolt set M10X30. The handles are IP65 protected, padlockable in the OFF-position and with door interlock in the ON-position.

F = Fused switched neutral
N2 = Non-fused switched neutral on the right side

Front operated

Rated current [A]	Fuse size	Number of poles	Type	Order number
Shaft and handle not included				
400	0...2	2	OS400D02	1SCA022811R2820
400	0...2	3	OS400D03	1SCA022753R1000
400	0...2	4	OS400D04N2	1SCA022754R2620
400	0...2	4	OS400D04F	1SCA022754R3860
With 250 mm shaft and external handle OHB95J12				
400	0...2	2	OS400D02P	1SCA022811R2740
400	0...2	3	OS400D03P	1SCA022719R0250
400	0...2	4	OS400D04N2P	1SCA022719R2460
400	0...2	4	OS400D04FP	1SCA022753R7110
With direct mount handle OSV400DK				
400	0...2	2	OS400D02K	1SCA101369R1001
400	0...2	3	OS400D03K	1SCA022779R5410
400	0...2	4	OS400D04N2K	1SCA022763R7250
400	0...2	4	OS400D04FK	1SCA022783R1490

Side operated

Shaft and handle not included				
400	0...2	3	OS400DS30	1SCA022871R2850
400	0...2	4	OS400DS40N2	1SCA022871R3230
400	0...2	4	OS400DS40F	1SCA022871R3070
With direct mount handle OHB145D12				
400	0...2	3	OS400DS30K	1SCA022871R2930
400	0...2	4	OS400DS40N2K	1SCA022871R3310
400	0...2	4	OS400DS40FK	1SCA022871R3150

Recommended accessories: Shrouds

Snap-on mounting, grey plastic, IP 3X from front. Transparent shrouds available on request.
For more details see page 86.

Suitable for switches	Description	Number of poles	Type	Order number
OS/OSM315...400	Long type	3	OSS400G1L/3	1SCA022776R6650
OS/OSM315...400	Short type	3	OSS400G1S/3	1SCA022776R6900
OS/OSM315...400	Long type	4	OSS400G1L/4	1SCA022776R6730
OS/OSM315...400	Short type	4	OSS400G1S/4	1SCA022776R7030

Manual operated switch fuses, IEC

Ordering information for DIN-type, 630 A



OS630...800D02P



OS630...800D04FP



OS630...800D03K



OS630...800DS04FK



OSS800G1L



OSS800G1S

Manual operated switch fuses, DIN-type, 630 A

Including terminal bolt set M12X40. Mechanism located at the end of the switch. The handles are IP65 protected, padlockable in the OFF-position and with door interlock in the ON-position.

F = Fused switched neutral
N2 = Non-fused switched neutral on the right side

Front operated

Rated current [A]	Fuse size	Number of poles	Type	Order number
Shaft and handle not included				
630	3	2	OS630D02	1SCA106144R1001
630	3	3	OS630D03	1SCA022825R2670
630	3	4	OS630D04N2	1SCA022825R4110
630	3	4	OS630D04F	1SCA022825R4530
With 280 mm shaft and external handle OHB145J12				
630	3	2	OS630D02P	1SCA107745R1001
630	3	3	OS630D03P	1SCA022825R2830
630	3	4	OS630D04N2P	1SCA022825R4290
630	3	4	OS630D04FP	1SCA022825R4610
With direct mount handle OSV800DK				
630	3	3	OS630D03K	1SCA108704R1001
630	3	4	OS630D04N2K	1SCA108705R1001
630	3	4	OS630D04FK	1SCA110300R1001

Side operated

Shaft and handle not included				
630	3	3	OS630DS30	1SCA108135R1001
630	3	4	OS630DS40N2	1SCA108139R1001
630	3	4	OS630DS40F	1SCA108137R1001
With direct mount handle OHB145D12				
630	3	3	OS630DS30K	1SCA108136R1001
630	3	4	OS630DS40N2K	1SCA108140R1001
630	3	4	OS630DS40FK	1SCA108138R1001

Recommended accessories: Shrouds

Snap-on mounting, grey plastic, IP 3X from front. Transparent shrouds available on request.
For more details see page 86.

Suitable for switches	Description	Number of poles	Type	Order number
OS/OSM600...800	Long type	3	OSS800G1L/3	1SCA022776R7200
OS/OSM600...800	Short type	3	OSS800G1S/3	1SCA022776R7540
OS/OSM600...800	Long type	4	OSS800G1L/4	1SCA022776R7380
OS/OSM600...800	Short type	4	OSS800G1S/4	1SCA022776R7460

Manual operated switch fuses, IEC

Ordering information for DIN-type, 800 A



OS630...800D02P



OS630...800D04FP

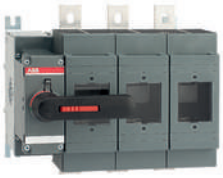

OS630...800D03K



OS630...800DS04FK



OSS800G1L



OSS800G1S

Manual operated switch fuses, DIN-type, 800 A

Including terminal bolt set M12X40. Mechanism located at the end of the switch. The handles are IP65 protected, padlockable in the OFF-position and with door interlock in the ON-position.

F = Fused switched neutral
N2 = Non-fused switched neutral on the right side

Front operated

Rated current [A]	Fuse size	Number of poles	Type	Order number
Shaft and handle not included				
800	3	2	OS800D02	1SCA022837R2570
800	3	3	OS800D03	1SCA022825R4700
800	3	4	OS800D04N2	1SCA022825R5690
800	3	4	OS800D04F	1SCA022825R8520
With 280 mm shaft and external handle OHB145J12				
800	3	2	OS800D02P	1SCA022837R2650
800	3	3	OS800D03P	1SCA022825R4880
800	3	4	OS800D04N2P	1SCA022825R5180
800	3	4	OS800D04FP	1SCA022825R5000
With direct mount handle OSV800DK				
800	3	3	OS800D03K	1SCA108725R1001
800	3	4	OS800D04N2K	1SCA108722R1001
800	3	4	OS800D04FK	1SCA110299R1001

Side operated

Shaft and handle not included				
800	3	3	OS800DS30	1SCA108098R1001
800	3	4	OS800DS40N2	1SCA108103R1001
800	3	4	OS800DS40F	1SCA108100R1001
With direct mount handle OHB145D12				
800	3	3	OS800DS30K	1SCA108099R1001
800	3	4	OS800DS40N2K	1SCA108104R1001
800	3	4	OS800DS40FK	1SCA108101R1001

Recommended accessories: Shrouds

Snap-on mounting, grey plastic, IP 3X from front. Transparent shrouds available on request.
For more details see page 86.

Suitable for switches	Description	Number of poles	Type	Order number
OS/OSM600...800	Long type	3	OSS800G1L/3	1SCA022776R7200
OS/OSM600...800	Short type	3	OSS800G1S/3	1SCA022776R7540
OS/OSM600...800	Long type	4	OSS800G1L/4	1SCA022776R7380
OS/OSM600...800	Short type	4	OSS800G1S/4	1SCA022776R7460

Manual operated switch fuses, IEC

Ordering information for DIN-type, 1250 A



OS1250D02P



OS1250D03P



OS1250D04P



OS1250D03K

Manual operated switch fuses, DIN-type, 1250 A

Including terminal bolt set M12X50. Mechanism located at the end of the switch. The handles are IP65 protected, padlockable in the OFF-position and with door interlock in the ON-position.

F = Fused switched neutral
N2 = Non-fused switched neutral on the right side

Front operated

Rated current [A]	Fuse size	Number of poles	Type	Order number
Shaft and handle not included				
1250	4	2	OS1250D02	1SCA114045R1001
1250	4	3	OS1250D03	1SCA105474R1001
1250	4	4	OS1250D04N2	1SCA105247R1001
1250	4	4	OS1250D04F	1SCA105472R1001
1250	4a	2	OS1250DA02	1SCA114058R1001
1250	4a	3	OS1250DA03	1SCA105165R1001
1250	4a	4	OS1250DA04N2	1SCA105242R1001
1250	4a	4	OS1250DA04F	1SCA105239R1001
With 395 mm shaft and external handle OHB274J12				
1250	4	2	OS1250D02P	1SCA114051R1001
1250	4	3	OS1250D03P	1SCA105475R1001
1250	4	4	OS1250D04N2P	1SCA105248R1001
1250	4	4	OS1250D04FP	1SCA105473R1001
1250	4a	2	OS1250DA02P	1SCA114059R1001
1250	4a	3	OS1250DA03P	1SCA105238R1001
1250	4a	4	OS1250DA04N2P	1SCA105243R1001
1250	4a	4	OS1250DA04FP	1SCA105240R1001
With direct mount handle OSV1250DK				
1250	4	3	OS1250D03K	1SCA108718R1001
1250	4	4	OS1250D04N2K	1SCA108719R1001
1250	4	4	OS1250D04FK	1SCA113109R1001
1250	4	3	OS1250DA03K	1SCA108720R1001
1250	4	4	OS1250DA04N2K	1SCA108721R1001

Recommended accessories: Shrouds

Snap-on mounting, grey plastic, IP 3X from front. Transparent shrouds available on request.
For more details see page 86.

Suitable for switches	Description	Number of poles	Type	Order number
OS1200...1250	Long type	3	OSS1250G1L/3	1SCA107938R1001
OS1200...1250	Short type	3	OSS1250G1S/3	1SCA107939R1001
OS1200...1250	Long type	4	OSS1250G1L/4	1SCA107940R1001
OS1200...1250	Short type	4	OSS1250G1S/4	1SCA107940R1001

Special connected switch fuses, IEC

Ordering information for DIN-type, 125 - 160 A



OS125...160GD12LRP



OS125...160GD04BBN2

Special connected switch fuses, DIN-type, 125 - 160 A
Including terminal bolt set M8X25. The handles are IP65 protected, padlockable in the OFF-position and with door interlock in the ON-position.

G = Gamma range from switch fuses from 125 to 160 Amperes

N2 = Non-fused switched neutral on the right side

Front operated with back in- back out connection

Rated current [A]	Fuse size	Number of poles	Type	Order number
Shaft and handle not included				
125	000, 00	3	OS125GD03BB	1SCA120801R1001
125	000, 00	4	OS125GD04BBN2	1SCA120805R1001
160A	000, 00	3	OS160GD03BB	1SCA120654R1001
160A	000, 00	4	OS160GD04BBN2	1SCA120660R1001
With 161 mm shaft and external handle OHB65J6				
125	000, 00	3	OS125GD03BBP	1SCA120802R1001
125	000, 00	4	OS125GD04BBN2P	1SCA120806R1001
160A	000, 00	3	OS160GD03BBP	1SCA120655R1001
160A	000, 00	4	OS160GD04BBN2P	1SCA120661R1001

Front operated with left in-right out connection

Shaft and handle not included				
125	000, 00	3	OS125GD12LR	1SCA120253R1001
125	000, 00	3	OS125GD21LR	1SCA120319R1001
125	000, 00	4	OS125GD22LR	1SCA120262R1001
160	000, 00	3	OS160GD12LR	1SCA120266R1001
160	000, 00	3	OS160GD21LR	1SCA120268R1001
160	000, 00	4	OS160GD22LR	1SCA120274R1001
With 161 mm shaft and external handle OHB65J6				
125	000, 00	3	OS125GD12LRP	1SCA120062R1001
125	000, 00	3	OS125GD21LRP	1SCA120255R1001
125	000, 00	4	OS125GD22LRP	1SCA120263R1001
160	000, 00	3	OS160GD12LRP	1SCA120267R1001
160	000, 00	3	OS160GD21LRP	1SCA120294R1001
160	000, 00	4	OS160GD22LRP	1SCA120275R1001

Special connected switch fuses, IEC

Ordering information for DIN-type, 200 - 400 A



OS200...250D22LRP



OS250D03BB



OS250D04BBN2



OS400D12LRP

Special connected switch fuses, DIN-type, 200 - 400 A
Including terminal bolt set M8X25 (OS200...250) or M10X30 (OS400). Mechanism located at the end of the switch. The handles are IP65 protected, padlockable in the OFF-position and with door interlock in the ON-position.

F = Fused switched neutral
N2 =Non-fused switched neutral on the right side

Front operated with back in- back out connection

Rated current [A]	Fuse size	Number of poles	Type	Order number
Shaft and handle not included				
200	0	3	OS200D03BB	1SCA102151R1001
200	0	4	OS200D04BBN2	1SCA102146R1001
250	0-1	3	OS250D03BB	1SCA102197R1001
250	0-1	4	OS250D04BBN2	1SCA102201R1001
400	0...2	3	OS400D03BB	1SCA102273R1001
400	0...2	4	OS400D04BBN2	1SCA102291R1001
With 210 mm shaft and external handle OHB65J6				
200	0	3	OS200D03BBP	1SCA102150R1001
200	0	4	OS200D04BBN2P	1SCA102139R1001
250	0-1	3	OS250D03BBP	1SCA102190R1001
250	0-1	4	OS250D04BBN2P	1SCA102205R1001
With 250 mm shaft and external handle OHB95J12				
400	0...2	3	OS400D03BBP	1SCA102260R1001
400	0...2	4	OS400D04BBN2P	1SCA102289R1001

Front operated with left in-right out connection

Shaft and handle not included				
250	0-1	3	OS250D12LR	1SCA022852R8250
250	0-1	3	OS250D21LR	1SCA022852R8330
250	0-1	4	OS250D22LR	1SCA022853R0230
400	0...2	3	OS400D12LR	1SCA022853R2010
400	0...2	4	OS400D21LR	1SCA022853R2100
400	0...2	4	OS400D22LR	1SCA022853R4060
With 210 mm shaft and external handle OHB65J6				
250	0-1	3	OS250D12LRP	1SCA022852R8410
250	0-1	3	OS250D21LRP	1SCA022852R8500
250	0-1	4	OS250D22LRP	1SCA022853R0310
With 250 mm shaft and external handle OHB95J12				
400	0...2	3	OS400D12LRP	1SCA022853R2280
400	0...2	4	OS400D21LRP	1SCA022853R2360
400	0...2	4	OS400D22LRP	1SCA022853R4140

Motorized switch fuses, IEC

Ordering information for DIN-type, OSM32...1250 A



OSM63GD3M230C



OSM160GD3M230C



OSM200D4N2M230C



OSM400D3M230C



OSM800D3M230C



OSM1250D3M230C

Motorized switch fuses OSM, 32...1250
Including a handle for manual operation, bolt kit with nut and washers for all terminals (100A…1250A), male connectors for control circuit and a handle and spare fuse storage clip.
Type codes for motor voltage U_e = 220-240 VAC

G = Gamma range from switch fuses from 32 to 160 Amperes

N2 = Non-fused switched neutral on the right side
N3 = Detachable neutral link integrated into the mechanism
Switched fusible neutral available on request.

Front operated

Rated current [A]	Fuse size	Number of poles	Type	Order number
32	000	3	OSM32GD3M230C	1SCA116664R1001
32	000	4	OSM32GD4N2M230C	1SCA118822R1001
63	000	3	OSM63GD3M230C	1SCA116660R1001
63	000	4	OSM63GD4N2M230C	1SCA118865R1001
125	000, 00	3	OSM125GD3M230C	1SCA116674R1001
125	000, 00	4	OSM125GD4N2M230C	1SCA118828R1001
160	000, 00	3	OSM160GD3M230C	1SCA116673R1001
160	000, 00	4	OSM160GD4N2M230C	1SCA118831R1001
200	0	3	OSM200D3M230C	1SCA104284R1001
200	0	3+N	OSM200D3N3M230C	1SCA104282R1001
200	0	4	OSM200D4N2M230C	1SCA118836R1001
250	0-1	3	OSM250D3M230C	1SCA104295R1001
250	0-1	3+N	OSM250D3N3M230C	1SCA104297R1001
250	0-1	4	OSM250D4N2M230C	1SCA118838R1001
400	0-2	3	OSM400D3M230C	1SCA104315R1001
400	0-2	3+N	OSM400D3N3M230C	1SCA104317R1001
400	0-2	4	OSM400D4N2M230C	1SCA118842R1001
630	3	3	OSM630D3M230C	1SCA104518R1001
630	3	3+N	OSM630D3N3M230C	1SCA104533R1001
630	3	4	OSM630D4N2M230C	1SCA118846R1001
800	3	3	OSM800D3M230C	1SCA104522R1001
800	3	3+N	OSM800D3N3M230C	1SCA104534R1001
800	3	4	OSM800D4N2M230C	1SCA118847R1001
1250	4	3	OSM1250D3M230C	1SCA112549R1001
1250	4	3+N	OSM1250D3N3M230C	1SCA112547R1001
1250	4	4	OSM1250D4N2M230C	1SCA118850R1001
1250	4a	3	OSM1250DA3M230C	1SCA112546R1001
1250	4a	3+N	OSM1250DA3N3M230C	1SCA112544R1001
1250	4a	4	OSM1250DA4N2M230C	1SCA118851R1001

Handles and bolt kits included as standard

Suitable for switches	Handle+shaft kit
OSM32…63	OTV250EMK
OSM100…200	OTV250EMK
OSM250	OTV250EMK
OSM400	OTV400EMK
OSM630…800	OTV800EMK
OSM1250	OTV1000EMK


HANJIN SHIPPING
HANJIN
K LINE
COSCO

Switch fuses BS type
Ordering information

Manual operated switch fuses, 20…32 A	45
Manual operated switch fuses, 63 A	46
Manual operated switch fuses, 100 A	47
Manual operated switch fuses, 125 A	48
Manual operated switch fuses, 160 A	49
Manual operated switch fuses, 200 A	50
Manual operated switch fuses, 100…200 A with integrated nuts	51
Manual operated switch fuses, 200 A	52
Manual operated switch fuses, 250 A	53
Manual operated switch fuses, 315 A	54
Manual operated switch fuses, 400 A	55
Manual operated switch fuses, 630 A	56
Manual operated switch fuses, 800 A	57
Manual operated switch fuses, 1250 A	58
Special connected switch fuses, 125…200 A	59
Special connected switch fuses, 250…400 A	60
Motorized switch fuses, 32...1250 A	61

Manual operated switch fuses, IEC

Ordering information for BS-type, 20...32 A



OS32...63GB02P



OS32...63GB04N1P



OS32G...63GB03K



OS32G...63GB04N1K



OS32GBS30K



OS32GBS40N1K

Manual operated switch fuses, BS-type, 20...32
Protected tunnel terminals, IP20. Mechanism located at the end of the switch. The handles are IP65 protected, padlockable in the OFF-position and with door interlock in the ON-position.

F = OS Mini range switch fuses from 20 to 32 Amperes
G = Gamma range from switch fuses 32 Amperes

N1 = Non-fused switched neutral on the left side
F = Switched fusible neutral

Front operated

Rated current [A]	Fuse size	Number of poles	Type	Order number
Shaft and handle not included				
20	A1	3	OS20FB12A1-2	1SCA108791R1001
20	A1	4	OS20FB22A1N1-2	1SCA108797R1001
32	A1	3	OS32FB12A1-2	1SCA108841R1001
32	A2	3	OS32FB12A2-2	1SCA108848R1001
32	A1	4	OS32FB22A1N1-2	1SCA108855R1001
32	A2	4	OS32FB22A2N1-2	1SCA108865R1001
32	A2, A3	2	OS32GB02	1SCA116792R1001
32	A2, A3	3	OS32GB03	1SCA115255R1001
32	A2, A3	4	OS32GB04N1	1SCA115265R1001
With 150 mm shaft and external handle OHB65J6				
20	A1	3	OS20FB12A1	1SCA108790R1001
20	A1	4	OS20FB22A1N1	1SCA108796R1001
32	A1	3	OS32FB12A1	1SCA108840R1001
32	A2	3	OS32FB12A2	1SCA108847R1001
32	A1	4	OS32FB22A1N1	1SCA108853R1001
32	A2	4	OS32FB22A2N1	1SCA108863R1001
With 161 mm shaft and external handle OHB45J6				
32	A2, A3	2	OS32GB02P	1SCA116721R1001
32	A2, A3	3	OS32GB03P	1SCA115259R1001
32	A2, A3	4	OS32GB04N1P	1SCA114610R1001
With direct mount handle OSV200BK				
32	A2, A3	3	OS32GB03K	1SCA116744R1001
32	A2, A3	4	OS32GB04N1K	1SCA116856R1001

Side operated

Shaft and handle not included				
32	A2, A3	3	OS32GBS30	1SCA115955R1001
32	A2, A3	4	OS32GBS40N1	1SCA115956R1001
With direct mount handle OHB65D6				
32	A2, A3	3	OS32GBS30K	1SCA115918R1001
32	A2, A3	4	OS32GBS40N1K	1SCA115923R1001

Manual operated switch fuses, IEC

Ordering information for BS-type, 63 A



OS32...63GB02P



OS32...63GB04N1P



OS32G...63GB03K



OS32G...63GB04N1K

Manual operated switch fuses, BS-type, 63 A
Protected tunnel terminals, IP20. Mechanism located at the end of the switch. The handles are IP65 protected, padlockable in the OFF-position and with door interlock in the ON-position.

G = Gamma range from switch fuses 63 Amperes

N1 = Non-fused switched neutral on the left side
F = Switched fusible neutral

Front operated

Rated current [A]	Fuse size	Number of poles	Type	Order number
Shaft and handle not included				
63	A2, A3	2	OS63GB02	1SCA116871R1001
63	A2, A3	3	OS63GB03	1SCA115234R1001
63	A2, A3	4	OS63GB04N1	1SCA115237R1001
63	A2, A3	4	OS63GB04F	1SCA116304R1001
With 161 mm shaft and external handle OHB45J6				
63	A2, A3	2	OS63GB02P	1SCA116854R1001
63	A2, A3	3	OS63GB03P	1SCA115235R1001
63	A2, A3	4	OS63GB04N1P	1SCA115238R1001
63	A2, A3	4	OS63GB04FP	1SCA116305R1001
With direct mount handle OSV200BK				
63	A2, A3	3	OS63GB03K	1SCA116745R1001
63	A2, A3	4	OS63GB04N1K	1SCA116746R1001

Side operated

Shaft and handle not included				
63	A2, A3	3	OS63GBS30	1SCA115957R1001
63	A2, A3	4	OS63GBS40N1	1SCA115978R1001
With direct mount handle OHB65D6				
63	A2, A3	3	OS63GBS30K	1SCA115924R1001
63	A2, A3	4	OS63GBS40N1K	1SCA115979R1001

Manual operated switch fuses, IEC

Ordering information for BS-type, 100 A



OS100...160GB03P



OS100...160GB03N3P

Manual operated switch fuses, BS-type, 100 A

Including terminal bolt set M8x25. Mechanism located at the end of the switch. The handles are IP65 protected, padlockable in the OFF-position and with door interlock in the ON-position.

G = Gamma range from switch fuses 100 Amperes

N1 = Non-fused switched neutral on the left side
F = Switched fusible neutral
N3 = Detachable neutral link integrated into the mechanism

Front operated

Rated current [A]	Fuse size	Number of poles	Type	Order number
Shaft and handle not included				
100	A2-A4[1)]	2	OS100GB02	1SCA116793R1001
100	A2-A4[1)]	3	OS100GB03	1SCA116975R1001
100	A2-A4[1)]	3+N	OS100GB03N3	1SCA125530R1001
100	A2-A4[1)]	4	OS100GB04N1	1SCA116976R1001
With 161 mm shaft and external handle OHB65J6				
100	A2-A4[1)]	2	OS100GB02P	1SCA116723R1001
100	A2-A4[1)]	3	OS100GB03P	1SCA114613R1001
100	A2-A4[1)]	3+N	OS100GB03N3P	1SCA125531R1001
100	A2-A4[1)]	4	OS100GB04N1P	1SCA114614R1001
With direct mount handle OSV200BK				
100	A2-A4[1)]	3	OS100GB03K	1SCA116747R1001
100	A2-A4[1)]	4	OS100GB04N1K	1SCA116748R1001

Side operated

Shaft and handle not included				
100	A2-A4[1)]	3	OS100GBS30	1SCA116758R1001
100	A2-A4[1)]	4	OS100GBS40N1	1SCA116759R1001
With 161 mm shaft and external handle OHB65J6E00S				
100	A2-A4[1)]	3	OS100GBS30P	1SCA114656R1001
100	A2-A4[1)]	4	OS100GBS40N1P	1SCA114657R1001

[1)] Max. fuse diameter 32 mm

Recommended accessories: Shrouds

Snap-on mounting, grey plastic, IP 3X from front. Transparent shrouds available on request.
For more details see page 86.

Suitable for switches	Description	Number of poles	Type	Order number
OS/OSM100G...160G	Long type	3	OSS160GG1L/3	1SCA114764R1001
OS/OSM100G...160G	Short type	3	OSS160GG1S/3	1SCA114766R1001
OS/OSM100G...160G	Long type	4	OSS160GG1L/4	1SCA114765R1001
OS/OSM100G...160G	Short type	4	OSS160GG1S/4	1SCA114767R1001
Terminal shrouds suitable for mechanism with detachable integrated neutral (N3 versions)				
OS/OSM100G...250_N3_	Long type	3+N	OTS250G1L	1SCA022715R5340
OS/OSM100G...250_N3_	Short type	3+N	OTS250G1S	1SCA022715R5260

Manual operated switch fuses, IEC

Ordering information for BS-type, 125 A



OS100...160GB03P



OS100...160GB03N3P

Manual operated switch fuses, BS-type, 125 A

Including terminal bolt set M8x25. Mechanism located at the end of the switch. The handles are IP65 protected, padlockable in the OFF-position and with door interlock in the ON-position.

G = Gamma range from switch fuses 125 Amperes

N1 = Non-fused switched neutral on the left side
F = Swithced fusible neutral
N3 = Detachable neutral link integrated into the mechanism

Front operated

Rated current [A]	Fuse size	Number of poles	Type	Order number
Shaft and handle not included				
125	A2-A4[1)]	2	OS125GB02	1SCA116794R1001
125	A2-A4[1)]	3	OS125GB03	1SCA115633R1001
125	A2-A4[1)]	3+N	OS125GB03N3	1SCA122007R1001
125	A2-A4[1)]	4	OS125GB04N1	1SCA115900R1001
With 161 mm shaft and external handle OHB65J6				
125	A2-A4[1)]	2	OS125GB02P	1SCA116724R1001
125	A2-A4[1)]	3	OS125GB03P	1SCA115634R1001
125	A2-A4[1)]	3+N	OS125GB03N3P	1SCA122008R1001
125	A2-A4[1)]	4	OS125GB04N1P	1SCA115901R1001
With direct mount handle OSV200BK				
125	A2-A4[1)]	3	OS125GB03K	1SCA116751R1001
125	A2-A4[1)]	4	OS125GB04N1K	1SCA116752R1001

Side operated

Shaft and handle not included				
125	A2-A4[1)]	3	OS125GBS30	1SCA116048R1001
125	A2-A4[1)]	4	OS125GBS40N1	1SCA115959R1001
With 161 mm shaft and external handle OHB65J6E00S				
125	A2-A4[1)]	3	OS125GBS30P	1SCA114658R1001
125	A2-A4[1)]	4	OS125GBS40N1P	1SCA114659R1001
With direct mount handle OHB65D6				
125	A2-A4[1)]	3	OS125GBS30K	1SCA116400R1001
125	A2-A4[1)]	4	OS125GBS40N1K	1SCA115926R1001

[1)] Max. fuse diameter 32 mm.

Recommended accessories: Shrouds

Snap-on mounting, grey plastic, IP 3X from front. Transparent shrouds available on request. For more details see page 86.

Suitable for switches	Description	Number of poles	Type	Order number
OS/OSM100G...160G	Long type	3	OSS160GG1L/3	1SCA114764R1001
OS/OSM100G...160G	Short type	3	OSS160GG1S/3	1SCA114766R1001
OS/OSM100G...160G	Long type	4	OSS160GG1L/4	1SCA114765R1001
OS/OSM100G...160G	Short type	4	OSS160GG1S/4	1SCA114767R1001
Terminal shrouds suitable for mechanism with detachable integrated neutral (N3 versions)				
OS/OSM100G...250_N3_	Long type	3+N	OTS250G1L	1SCA022715R5340
OS/OSM100G...250_N3_	Short type	3+N	OTS250G1S	1SCA022715R5260

Manual operated switch fuses, IEC

Ordering information for BS-type, 160 A



OS100...160GB03P



OS100...160GB03N3P

Manual operated switch fuses, BS-type, 160 A

Including terminal bolt set M8x25. Mechanism located at the end of the switch. The handles are IP65 protected, padlockable in the OFF-position and with door interlock in the ON-position.

G = Gamma range from switch fuses 160 Amperes

N1 = Non-fused switched neutral on the left side
F = Switched fusible neutral
N3 = Detachable neutral link integrated into the mechanism

Front operated

Rated current [A]	Fuse size	Number of poles	Type	Order number
Shaft and handle not included				
160	A2-A4[1)]	2	OS160GB02	1SCA116795R1001
160	A2-A4[1)]	3	OS160GB03	1SCA115412R1001
160	A2-A4[1)]	3+N	OS160GB03N3	1SCA122009R1001
160	A2-A4[1)]	4	OS160GB04N1	1SCA115895R1001
160	A2-A4[1)]	4	OS160GB04F	1SCA115418R1001
With 161 mm shaft and external handle OHB65J6				
160	A2-A4[1)]	2	OS160GB02P	1SCA116725R1001
160	A2-A4[1)]	3	OS160GB03P	1SCA115413R1001
160	A2-A4[1)]	3+N	OS160GB03N3P	1SCA122010R1001
160	A2-A4[1)]	4	OS160GB04N1P	1SCA115896R1001
160	A2-A4[1)]	4	OS160GB04FP	1SCA115419R1001
With direct mount handle OSV200BK				
160	A2-A4[1)]	3	OS160GB03K	1SCA116753R1001
160	A2-A4[1)]	4	OS160GB04N1K	1SCA116754R1001

Side operated

Shaft and handle not included				
160	A2-A4[1)]	3	OS160GBS30	1SCA115960R1001
160	A2-A4[1)]	4	OS160GBS40N1	1SCA115961R1001
With 161 mm shaft and external handle OHB65J6E00S				
160	A2-A4[1)]	3	OS160GBS30P	1SCA114660R1001
160	A2-A4[1)]	4	OS160GBS40N1P	1SCA114661R1001
With direct mount handle OHB65D6				
160	A2-A4[1)]	3	OS160GBS30K	1SCA115927R1001
160	A2-A4[1)]	4	OS160GBS40N1K	1SCA115928R1001

[1)] Max. fuse diameter 32 mm.

Recommended accessories: Shrouds

Snap-on mounting, grey plastic, IP 3X from front. Transparent shrouds available on request. For more details see page 86.

Suitable for switches	Description	Number of poles	Type	Order number
OS/OSM100G...160G	Long type	3	OSS160GG1L/3	1SCA114764R1001
OS/OSM100G...160G	Short type	3	OSS160GG1S/3	1SCA114766R1001
OS/OSM100G...160G	Long type	4	OSS160GG1L/4	1SCA114765R1001
OS/OSM100G...160G	Short type	4	OSS160GG1S/4	1SCA114767R1001
Terminal shrouds suitable for mechanism with detachable integrated neutral (N3 versions)				
OS/OSM100G...250_N3_	Long type	3+N	OTS250G1L	1SCA022715R5340
OS/OSM100G...250_N3_	Short type	3+N	OTS250G1S	1SCA022715R5260

Manual operated switch fuses, IEC

Ordering information for BS-type, 200 A



OS200GB03P



OS200GB03N3P



OSS200G1L



OSS200G1S

Manual operated switch fuses, BS-type, 200 A

BS-fuse type dedicated Gamma-generation switch with rated operational current AC21-23A, 160A. Including terminal bolt set M8x25. Mechanism located at the end of the switch. The handles are IP65 protected, pavdlockable in the OFF-position and with door interlock in the ON-position.

G = Gamma range from switch fuses 200 Amperes

N1 = Non-fused switched neutral on the left side
F = Switched fusible neutral
N3 = Detachable neutral link integrated into the mechanism

Front operated

Rated current [A]	Fuse size	Number of poles	Type	Order number
Shaft and handle not included				
160	A2-A4[1)]	3	OS200GB03	1SCA123903R1001
160	A2-A4[1)]	3+N	OS200GB03N3	1SCA123904R1001
160	A2-A4[1)]	4	OS200GB04N1	1SCA125491R1001
With 161 mm shaft and external handle OHB65J6				
160	A2-A4[1)]	3	OS200GB03P	1SCA125468R1001
160	A2-A4[1)]	3+N	OS200GB03N3P	1SCA126216R1001
160	A2-A4[1)]	4	OS200GB04N1P	1SCA125493R1001
With direct mount handle OSV200BK				
160	A2-A4[1)]	3	OS200GB03K	1SCA128085R1001
160	A2-A4[1)]	3+N	OS200GB03N3K	1SCA128087R1001

[1)] Max. fuse diameter 32 mm.

Recommended accessories: Shrouds

Snap-on mounting, grey plastic, IP 3X from front. Transparent shrouds available on request. For more details see page 86.

Suitable for switches	Description	Number of poles	Type	Order number
OS/OSM200GB	Long type	3	OSS160GG1L/3	1SCA114764R1001
OS/OSM200GB	Short type	3	OSS160GG1S/3	1SCA114766R1001
OS/OSM200GB	Long type	4	OSS160GG1L/4	1SCA114765R1001
OS/OSM200GB	Short type	4	OSS160GG1S/4	1SCA114767R1001
Terminal shrouds suitable for mechanism with detachable integrated neutral (N3 versions)				
OS/OSM100G...250_N3_	Long type	3+N	OTS250G1L	1SCA022715R5340
OS/OSM100G...250_N3_	Short type	3+N	OTS250G1S	1SCA022715R5260

Manual operated switch fuses, IEC

Ordering information for BS-type, 100...200 A

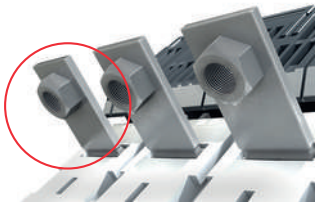

Terminals with integrated nuts



OS100...200GB03P-42



OS100...160GB12P-42



OS100...200GB03N3P-42



OSS250G1SH

Manual operated switch fuses, BS-type, 100...200 A with integrated nuts
The types -42 have integrated nuts for ease of installation. Including terminal bolt set. Mechanism located at the end of the switch. The handles are IP65 protected, padlockable in the OFF-position and with door interlock in the ON-position.

G = Gamma range from switch fuses from 100 to 200 Amperes

N3 = Detachable neutral link integrated into the mechanism

Front operated

Rated current [A]	Fuse size	Number of poles	Type	Order number
Shaft and handle not included				
100	A2-A4[1)]	3	OS100GB03-42	1SCA128216R1001
100	A2-A4[1)]	3+N	OS100GB03N3-42	1SCA129906R1001
125	A2-A4[1)]	3	OS125GB03-42	1SCA128214R1001
125	A2-A4[1)]	3+N	OS125GB03N3-42	1SCA129911R1001
160	A2-A4[1)]	3	OS160GB03-42	1SCA128212R1001
160	A2-A4[1)]	3+N	OS160GB03N3-42	1SCA129915R1001
200	A2-A4[1)]	3	OS200GB03-42	1SCA128210R1001
200	A2-A4[1)]	3+N	OS200GB03N3-42	1SCA129921R1001
With 161 mm shaft and external handle OHB65J6				
100	A2-A4[1)]	3	OS100GB03N3P-42	1SCA129907R1001
100	A2-A4[1)]	3+N	OS100GB03P-42	1SCA128217R1001
125	A2-A4[1)]	3	OS125GB03N3P-42	1SCA129912R1001
125	A2-A4[1)]	3+N	OS125GB03P-42	1SCA128215R1001
160	A2-A4[1)]	3	OS160GB03N3P-42	1SCA129916R1001
160	A2-A4[1)]	3+N	OS160GB03P-42	1SCA128213R1001
200	A2-A4[1)]	3	OS200GB03N3P-42	1SCA129922R1001
200	A2-A4[1)]	3+N	OS200GB03P-42	1SCA128211R1001

[1)] Max. fuse diameter 32 mm.

Recommended accessories: Shrouds
Snap-on mounting, grey plastic, IP 3X from front. Transparent shrouds available on request. For more details see page 86.

Suitable for switches	Description	Number of poles	Type	Order number
OS/OSM100G...160G, 200GB	Long type	3	OSS160GG1L/3	1SCA114764R1001
OS/OSM100G...160G, 200GB	Short type	3	OSS160GG1S/3	1SCA114766R1001
OS/OSM100G...160G, 200GB	Long type	4	OSS160GG1L/4	1SCA114765R1001
OS/OSM100G...160G, 200GB	Short type	4	OSS160GG1S/4	1SCA114767R1001
Terminal shrouds suitable for mechanism with detachable integrated neutral (N3 versions)				
OS/OSM100G...250_N3_	Long type	3+N	OTS250G1L	1SCA022715R5340
OS/OSM100G...250_N3_	Short type	3+N	OTS250G1S	1SCA022715R5260

Manual operated switch fuses, IEC

Ordering information for BS-type, 200 A



OS200...250B02P



OS200...250B03N3



OS200...250BS30K



OS200...250BS40N2K



OSS200G1L



OSS200G1S



OSS250G1SH

Manual operated switch fuses, BS-type, 200 A

Including terminal bolt set M8x25. Mechanism located at the end of the switch. The handles are IP65 protected, padlockable in the OFF-position and with door interlock in the ON-position.

N1 = Non-fused switched neutral on the left side
F = Switched fusible neutral
N3 = Detachable neutral link integrated into the mechanism

Front operated

Rated current [A]	Fuse size	Number of poles	Type	Order number
Shaft and handle not included				
200	B1-B2	2	OS200B02	1SCA022769R7660
200	B1-B2	3	OS200B03	1SCA022717R3410
200	B1-B2	3+N	OS200B03N3	1SCA022750R0540
200	B1-B2	4	OS200B04F	1SCA123706R1001
With 210 mm shaft and external handle OHB65J6				
200	B1-B2	2	OS200B02P	1SCA022769R7820
200	B1-B2	3	OS200B03P	1SCA022709R9330
200	B1-B2	3+N	OS200B03N3P	1SCA022750R0620
200	B1-B2	4	OS200B04FP	1SCA123704R1001
With direct mount handle OSV200BK				
200	B1-B2	3	OS200B03K	1SCA022763R6950

Side operated

Shaft and handle not included				
200	B1-B2	3	OS200BS30	1SCA022870R7770
200	B1-B2	4	OS200BS40F	1SCA022870R7930
With direct mount handle OHB65D6				
200	B1-B2	3	OS200BS30K	1SCA022870R7850
200	B1-B2	4	OS200BS40FK	1SCA022870R8070

Recommended accessories: Shrouds

Snap-on mounting, grey plastic, IP 3X from front. Transparent shrouds available on request. For more details see page 84.

Suitable for switches	Description	Number of poles	Type	Order number
OS/OSM200	Long type	3	OSS200G1L/3	1SCA022731R8910
OS/OSM200	Short type	3	OSS200G1S/3	1SCA022732R0130
OS/OSM200	Long type	4	OSS200G1L/4	1SCA022731R9040
OS/OSM200	Short type	4	OSS200G1S/4	1SCA022732R0050
Terminal shrouds suitable for mechanism with detachable integrated neutral (N3 versions)				
OS/OSM100G...250_N3_	Long type	3+N	OTS250G1L	1SCA022715R5340
OS/OSM100G...250_N3_	Short type	3+N	OTS250G1S	1SCA022715R5260

Manual operated switch fuses, IEC

Ordering information for BS-type, 250 A



OS200...250B02P



OS200...250B03N3



OS200...250BS30K



OS200...250BS40N2K



OSS250G1L



OSS250G1SH

Manual operated switch fuses, BS-type, 250 A

I Including terminal bolt set M10X30. Mechanism located at the end of the switch. The handles are IP65 protected, padlockable in the OFF-position and with door interlock in the ON-position.

N1 = Non-fused switched neutral on the left side
F = Switched fusible neutral
N3 = Detachable neutral link integrated into the mechanism

Front operated

Rated current [A]	Fuse size	Number of poles	Type	Order number
Shaft and handle not included				
250	B1-B3	2	OS250B02	1SCA022769R9360
250	B1-B3	3	OS250B03	1SCA022750R6400
250	B1-B3	3+N	OS250B03N3	1SCA022750R7980
250	B1-B3	4	OS250B04N1	1SCA022750R7040
250	B1-B3	4	OS250B04F	1SCA109110R1001
With 161 mm shaft and external handle OHB65J6				
250	B1-B3	2	OS250B02P	1SCA022769R9440
250	B1-B3	3	OS250B03P	1SCA022750R6660
250	B1-B3	3+N	OS250B03N3P	1SCA022750R8010
250	B1-B3	4	OS250B04N1P	1SCA022750R7120
250	B1-B3	4	OS250B04FP	1SCA109112R1001
With direct mount handle OSV200BK				
250	B1-B3	3	OS250B03K	1SCA022763R6010
250	B1-B3	4	OS250B04N1K	1SCA022763R6100

Side operated

Shaft and handle not included				
250	B1-B3	3	OS250BS30	1SCA022870R8580
250	B1-B3	4	OS250BS40F	1SCA022870R8740
With direct mount handle OHB65D6				
250	B1-B3	3	OS250BS30K	1SCA022870R8660
250	B1-B3	4	OS250BS40FK	1SCA022870R8820

Recommended accessories: Shrouds

Snap-on mounting, grey plastic, IP 3X from front. Transparent shrouds available on request.
For more details see page 84.

Suitable for switches	Description	Number of poles	Type	Order number
OS/OSM250	Long type	3	OSS250G1L/3	1SCA022731R9390
OS/OSM250	Short type	3	OSS250G1S/3	1SCA022731R9550
OS/OSM250	Long type	4	OSS250G1L/4	1SCA022731R9470
OS/OSM250	Short type	4	OSS250G1S/4	1SCA022731R9630
Terminal shrouds suitable for mechanism with detachable integrated neutral (N3 versions)				
OS/OSM100G...250_N3_	Long type	3+N	OTS250G1L	1SCA022715R5340
OS/OSM100G...250_N3_	Short type	3+N	OTS250G1S	1SCA022715R5260

Manual operated switch fuses, IEC

Ordering information for BS-type, 315 A



OS315...400B03P



OS315BS30



OS315B04FP



OS315BS03K



OSS250G1SH

Manual operated switch fuses, BS-type, 315 A

Including terminal bolt set M10x30. Mechanism located at the end of the switch. The handles are IP65 protected, padlockable in the OFF-position and with door interlock in the ON-position.

N1 = Non-fused switched neutral on the left side
F = Switched fusible neutral
N3 = Detachable neutral link integrated into the mechanism

Front operated

Rated current [A]	Fuse size	Number of poles	Type	Order number
Shaft and handle not included				
315	B1-B4	2	OS315B02	1SCA022817R3370
315	B1-B4	3	OS315B03	1SCA022753R2070
315	B1-B4	3+N	OS315B03N3	1SCA022753R9590
315	B1-B4	4	OS315B04F	1SCA022777R5480
With 200 mm shaft and external handle OHB95J12				
315	B1-B4	2	OS315B02P	1SCA022817R3450
315	B1-B4	3	OS315B03P	1SCA022719R0680
315	B1-B4	3+N	OS315B03N3P	1SCA022753R8940
315	B1-B4	4	OS315B04FP	1SCA022753R6650
With direct mount handle OSV400BK				
315	B1-B4	3	OS315B03K	1SCA022763R6520
315	B1-B4	4	OS315B04N1K	1SCA022763R7170

Side operated

Shaft and handle not included				
315	B1-B4	3	OS315BS30	1SCA022870R9390
315	B1-B4	4	OS315BS40F	1SCA022870R9550
With direct mount handle OHB95D12				
315	B1-B4	3	OS315BS30K	1SCA022870R9470
315	B1-B4	4	OS315BS40FK	1SCA022870R9630

Recommended accessories: Shrouds

Snap-on mounting, grey plastic, IP 3X from front. Transparent shrouds available on request. For more details see page 84.

Suitable for switches	Description	Number of poles	Type	Order number
OS/OSM315...400	Long type	3	OSS400G1L/3	1SCA022776R6650
OS/OSM315...400	Short type	3	OSS400G1S/3	1SCA022776R6900
OS/OSM315...400	Long type	4	OSS400G1L/4	1SCA022776R6730
OS/OSM315...400	Short type	4	OSS400G1S/4	1SCA022776R7030
Terminal shrouds suitable for mechanism with detachable integrated neutral (N3 versions)				
OS/OSM315...400_N3_	Long type	3+N	OSS250G1L	1SCA022727R5080
OS/OSM315...400_N3_	Short type	3+N	OSS250G1S	1SCA022727R4940

Manual operated switch fuses, IEC

Ordering information for BS-type, 400 A



OS315...400B03P



OS400B03N3P



OS400B04FP



OS400B03K



OSS250G1SH

Manual operated switch fuses, BS-type, 400 A

Including terminal bolt set M8x25. Mechanism located at the end of the switch. The handles are IP65 protected, padlockable in the OFF-position and with door interlock in the ON-position.

N1 = Non-fused switched neutral on the left side
F = Switched fusible neutral
N3 = Detachable neutral link integrated into the mechanism

Front operated

Rated current [A]	Fuse size	Number of poles	Type	Order number
Shaft and handle not included				
400	B1-B4	2	OS400B02	1SCA022813R7140
400	B1-B4	3	OS400B03	1SCA022737R4900
400	B1-B4	3+N	OS400B03N3	1SCA022753R9830
400	B1-B4	4	OS400B04F	1SCA022754R4590
With 200 mm shaft and external handle OHB95J12				
400	B1-B4	2	OS400B02P	1SCA022813R7220
400	B1-B4	3	OS400B03P	1SCA022719R0840
400	B1-B4	3+N	OS400B03N3P	1SCA022753R9160
400	B1-B4	4	OS400B04FP	1SCA022753R6900
With direct mount handle OSV400BK				
400	B1-B4	3	OS400B03K	1SCA022763R6790

Side operated

Shaft and handle not included				
400	B1-B4	3	OS400BS30	1SCA022871R0130
400	B1-B4	4	OS400BS40F	1SCA022871R0300
With direct mount handle OHB95D12				
400	B1-B4	3	OS400BS30K	1SCA022871R0210
400	B1-B4	4	OS400BS40FK	1SCA022871R0480

Recommended accessories: Shrouds

Snap-on mounting, grey plastic, IP 3X from front. Transparent shrouds available on request. For more details see page 84.

Suitable for switches	Description	Number of poles	Type	Order number
OS/OSM315...400	Long type	3	OSS400G1L/3	1SCA022776R6650
OS/OSM315...400	Short type	3	OSS400G1S/3	1SCA022776R6900
OS/OSM315...400	Long type	4	OSS400G1L/4	1SCA022776R6730
OS/OSM315...400	Short type	4	OSS400G1S/4	1SCA022776R7030
Terminal shrouds suitable for mechanism with detachable integrated neutral (N3 versions)				
OS/OSM315...400_N3_	Long type	3+N	OSS250G1L	1SCA022727R5080
OS/OSM315...400_N3_	Short type	3+N	OSS250G1S	1SCA022727R4940

Manual operated switch fuses, IEC

Ordering information for BS-type, 630 A



OS630B02P



OS630B03N3P



OS630B03K



OS630BS30



OS630BS40N2K



OSS800G1S

Manual operated switch fuses, BS-type, 630 A

Including terminal bolt set M12X40. Mechanism located at the end of the switch. The handles are IP65 protected, padlockable in the OFF-position and with door interlock in the ON-position.

N1 = Non-fused switched neutral on the left side
F = Switched fusible neutral
N3 = Detachable neutral link integrated into the mechanism

Front operated

Rated current [A]	Fuse size	Number of poles	Type	Order number
Shaft and handle not included				
630	C1-C2	2	OS630B02	1SCA113528R1001
630	C1-C2	3	OS630B03	1SCA022825R5770
630	C1-C2	3+N	OS630B03N3	1SCA106295R1001
630	C1-C2	4	OS630B04N1	1SCA022837R7020
630	C1-C2	4	OS630B04F	1SCA022825R5930
With 280 mm shaft and external handle OHB145J12				
630	C1-C2	2	OS630B02P	1SCA113529R1001
630	C1-C2	3	OS630B03P	1SCA022825R5850
630	C1-C2	3+N	OS630B03N3P	1SCA100860R1001
630	C1-C2	4	OS630B04N1P	1SCA022837R7110
630	C1-C2	4	OS630B04FP	1SCA022825R6070
With direct mount handle OSV800BK				
630	C1-C2	3	OS630B03K	1SCA108708R1001
630	C1-C2	4	OS630B04FK	1SCA110317R1001

Side operated

Shaft and handle not included				
630	C1-C2	3	OS630BS30	1SCA108147R1001
630	C1-C2	4	OS630BS40F	1SCA108149R1001
With direct mount handle OHB145D12				
630	C1-C2	3	OS630BS30K	1SCA108148R1001
630	C1-C2	4	OS630BS40FK	1SCA108150R1001

Recommended accessories: Shrouds

Snap-on mounting, grey plastic, IP 3X from front. Transparent shrouds available on request. For more details see page 84.

Suitable for switches	Description	Number of poles	Type	Order number
OS/OSM600...800	Long type	3	OSS800G1L/3	1SCA022776R7200
OS/OSM600...800	Short type	3	OSS800G1S/3	1SCA022776R7540
OS/OSM600...800	Long type	4	OSS800G1L/4	1SCA022776R7380
OS/OSM600...800	Short type	4	OSS800G1S/4	1SCA022776R7460
Terminal shrouds suitable for mechanism with detachable integrated neutral (N3 versions)				
OS/OSM630...800_N3_	Long type	3+N	OTS800G1L	1SCA022776R7710
OS/OSM630...800_N3_	Short type	3+N	OTS800G1S	1SCA022776R8010

Manual operated switch fuses, IEC

Ordering information for BS-type, 800 A



OS800B02P



OS800B03N3P



OS800BS30



OS800BS40N2K



OSS800G1L



OSS800G1S

Manual operated switch fuses, BS-type, 800 A

Including terminal bolt set M12X40. Mechanism located at the end of the switch. The handles are IP65 protected, padlockable in the OFF-position and with door interlock in the ON-position.

N1 = Non-fused switched neutral on the left side
F = Switched fusible neutral
N3 = Detachable neutral link integrated into the mechanism

Front operated

Rated current [A]	Fuse size	Number of poles	Type	Order number
Shaft and handle not included				
800	C1-C3	2	OS800B02	1SCA022837R6560
800	C1-C3	3	OS800B03	1SCA022825R7470
800	C1-C3	3+N	OS800B03N3	1SCA110102R1001
800	C1-C3	4	OS800B04N1	1SCA022837R6050
800	C1-C3	4	OS800B04F	1SCA022825R7710
With 280 mm shaft and external handle OHB145J12				
800	C1-C3	2	OS800B02P	1SCA022837R6480
800	C1-C3	3	OS800B03P	1SCA022825R7550
800	C1-C3	3+N	OS800B03N3P	1SCA100861R1001
800	C1-C3	4	OS800B04N1P	1SCA022837R6130
800	C1-C3	4	OS800B04FP	1SCA022825R7800
With direct mount handle OSV800BK				
800	C1-C3	3	OS800B03K	1SCA108713R1001
800	C1-C3	4	OS800B04FK	1SCA110316R1001

Side operated

Shaft and handle not included				
800	C1-C3	3	OS800BS30	1SCA108083R1001
800	C1-C3	4	OS800BS40F	1SCA108085R1001
With direct mount handle OHB145D12				
800	C1-C3	3	OS800BS30K	1SCA108084R1001
800	C1-C3	4	OS800BS40FK	1SCA108102R1001

Recommended accessories: Shrouds

Snap-on mounting, grey plastic, IP 3X from front. Transparent shrouds available on request. For more details see page 84.

Suitable for switches	Description	Number of poles	Type	Order number
OS/OSM600...800	Long type	3	OSS800G1L/3	1SCA022776R7200
OS/OSM600...800	Short type	3	OSS800G1S/3	1SCA022776R7540
OS/OSM600...800	Long type	4	OSS800G1L/4	1SCA022776R7380
OS/OSM600...800	Short type	4	OSS800G1S/4	1SCA022776R7460
Terminal shrouds suitable for mechanism with detachable integrated neutral (N3 versions)				
OS/OSM630...800_N3_	Long type	3+N	OTS800G1L	1SCA022776R7710
OS/OSM630...800_N3_	Short type	3+N	OTS800G1S	1SCA022776R8010

Manual operated switch fuses, IEC

Ordering information for BS type, 1250 A



OS1250B03N3P



OS1250B03N3K

Manual operated switch fuses, BS type, 1250 A

Including terminal bolt set M12X50. Mechanism located at the end of the switch. The handles are IP65 protected, padlockable in the OFF-position and with door interlock in the ON-position.

Front operated

Rated current [A]	Fuse size	Number of poles	Type	Order number
Shaft and handle not included				
1250[1)]	D1	2	OS1250B02	1SCA114069R1001
1250[1)]	D1	3	OS1250B03	1SCA105249R1001
1250[1)]	D1	3+N	OS1250B03N3	1SCA127485R1001
1250[1)]	D1	4	OS1250B04F	1SCA105257R1001
With 395 mm shaft and external handle OHB274J12				
1250[1)]	D1	2	OS1250B02P	1SCA114070R1001
1250[1)]	D1	3	OS1250B03P	1SCA105250R1001
1250[1)]	D1	3+N	OS1250B03N3P	1SCA107936R1001
1250[1)]	D1	4	OS1250B04FP	1SCA105258R1001
With direct mount handle OSV1250DK				
1250[1)]	D1	3	OS1250B03K	1SCA108715R1001

[1)] 1250A / AC-20…22A, 1000A / AC-23A.

Recommended accessories: Shrouds

Snap-on mounting, grey plastic, IP 3X from front. Transparent shrouds available on request. For more details see page 84.

Suitable for switches	Description	Number of poles	Type	Order number
OS1200...1250	Long type	3	OSS1250G1L/3	1SCA107938R1001
OS1200...1250	Short type	3	OSS1250G1S/3	1SCA107939R1001
OS1200...1250	Long type	4	OSS1250G1L/4	1SCA107940R1001
OS1200...1250	Short type	4	OSS1250G1S/4	1SCA107941R1001
Terminal shrouds suitable for mechanism with detachable integrated neutral (N3 versions)				
OS1200...1250/OSM1250_N3_	Long type	3+N	OTS1600G1L	1SCA106134R1001
OS1200...1250/OSM1250_N3_	Short type	3+N	OTS1600G1S	1SCA102667R1001

Special connected switch fuses, IEC

Ordering information for BS-type, 125...200 A



OS125G...160GB12LR



OS125GB21LR



OS125GB22LR



OS125...160GB03BB



OS200B03BB

Special connected switch fuses, BS-type, 125...200 A
Including terminal bolt set M8x25. Mechanism located at the end of the switch. The handles are IP65 protected, padlockable in the OFF-position and with door interlock in the ON-position.

G = Gamma range from switch fuses from 125 to 160 Amperes

N1 = Non-fused switched neutral on the left side
N2 = Non-fused switched neutral on the right side
N3 = Detachable neutral link integrated into the mechanism
F = Switched fusible neutral

Front operated with back in - back out connection

Rated current [A]	Fuse size	Number of poles	Type	Order number
Shaft and handle not included				
125	A2-A4[1)]	3	OS125GB03BB	1SCA120782R1001
125	A2-A4[1)]	4	OS125GB04BBN2	1SCA120784R1001
160	A2-A4[1)]	3	OS160GB03BB	1SCA120656R1001
160	A2-A4[1)]	4	OS160GB04BBN2	1SCA120664R1001
200	B1-B2[2)]	3	OS200B03BB	1SCA102083R1001
200	B1-B2[2)]	4	OS200B04BBN2	1SCA102137R1001
With 161 mm shaft and external handle OHB65J6				
125	A2-A4[1)]	3	OS125GB03BBP	1SCA120783R1001
125	A2-A4[1)]	4	OS125GB04BBN2P	1SCA120785R1001
160	A2-A4[1)]	3	OS160GB03BBP	1SCA120657R1001
160	A2-A4[1)]	4	OS160GB04BBN2P	1SCA120665R1001
200	B1-B2[2)]	3	OS200B03BBP	1SCA102082R1001
200	B1-B2[2)]	4	OS200B04BBN2P	1SCA102123R1001

[1)] Max fuse diameter 32 mm.

Front operated with left in - right out connection

Shaft and handle not included				
125	A2-A4[1)]	3	OS125GB12LR	1SCA120257R1001
125	A2-A4[1)]	4	OS125GB21LR	1SCA120259R1001
125	A2-A4[1)]	4	OS125GB22LR	1SCA120264R1001
160	A2-A4[1)]	3	OS160GB12LR	1SCA123716R1001
160	A2-A4[1)]	4	OS160GB21LR	1SCA120272R1001
160	A2-A4[1)]	4	OS160GB22LR	1SCA120276R1001
With 161 mm shaft and external handle OHB65J6				
125	A2-A4[1)]	3	OS125GB12LRP	1SCA120258R1001
125	A2-A4[1)]	4	OS125GB21LRP	1SCA120261R1001
125	A2-A4[1)]	4	OS125GB22LRP	1SCA120265R1001
160	A2-A4[1)]	3	OS160GB12LRP	1SCA120271R1001
160	A2-A4[1)]	4	OS160GB21LRP	1SCA120273R1001
160	A2-A4[1)]	4	OS160GB22LRP	1SCA120277R1001

Special connected switch fuses, IEC

Ordering information for BS-type, 250...400 A



OS250B12LR



OS250...400B03BB



OS250...400B04BBN2



OS400B03BB



OS400B04BB



OS400B12LR

Special connected switch fuses, BS-type, 250...400

Including terminal bolt set M10X30. Mechanism located at the end of the switch. The handles are IP65 protected, padlockable in the OFF-position and with door interlock in the ON-position.

N2 = Non-fused switched neutral on the right side

Front operated with back in- back out connection

Rated current [A]	Fuse size	Number of poles	Type	Order number
Shaft and handle not included				
250	B1-B3	3	OS250B03BB	1SCA102173R1001
250	B1-B3	4	OS250B04BBN2	1SCA102175R1001
With 161 mm shaft and external handle OHB65J6				
250	B1-B3	3	OS250B03BBP	1SCA102168R1001
250	B1-B3	4	OS250B04BBN2P	1SCA102164R1001

Front operated with left in-right out connection

Shaft and handle not included				
250	B1-B3	3	OS250B12LR	1SCA022854R5420
250	B1-B3	4	OS250B21LR	1SCA022854R5510
250	B1-B3	4	OS250B22LR	1SCA022854R7120
With 161 mm shaft and external handle OHB65J6				
250	B1-B3	3	OS250B12LRP	1SCA022854R5690
250	B1-B3	4	OS250B21LRP	1SCA022854R5850
250	B1-B3	4	OS250B22LRP	1SCA022854R7210

Front operated with back in- back out connection

Rated current [A]	Fuse size	Number of poles	Type	Order number
Shaft and handle not included				
400	B1-B4	3	OS400B03BB	1SCA102250R1001
400	B1-B4	4	OS400B04BBN2	1SCA102239R1001
With 161 mm shaft and external handle OHB65J6				
400	B1-B4	3	OS400B03BBP	1SCA102252R1001
400	B1-B4	4	OS400B04BBN2P	1SCA102248R1001

Front operated with left in-right out connection

Shaft and handle not included				
400	B1-B4	3	OS400B12LR	1SCA022855R1230
400	B1-B4	4	OS400B21LR	1SCA022855R1310
400	B1-B4	4	OS400B22LR	1SCA022855R2630
With 161 mm shaft and external handle OHB65J6				
400	B1-B4	3	OS400B12LRP	1SCA022855R1400
400	B1-B4	4	OS400B21LRP	1SCA022855R1580
400	B1-B4	4	OS400B22LRP	1SCA022855R2710

Motorized switch fuses, IEC

Ordering information for BS type, 32...1250 A



OSM250B3N3M230C



OSM250B4N1M230C



OSM315B3N3M230C

Motorized switch fuses OSM, BS type, 32...1250 A
Including a handle for manual operation, bolt kit with nut and washers for all terminals (100A...1250A), male connectors for control circuit and a handle and spare fuse storage clip. Type codes for motor voltage Ue = 220-240 VAC.

G = Gamma range from switch fuses from 32 to 160 Amperes

N2 = Non-fused switched neutral on the left side
N3 = Detachable neutral link integrated into the mechanism
Switched fusible neutral available on request.

Front operated

Rated current [A]	Fuse size	Number of poles	Type	Order number
Shaft and handle not included				
32	A2-A3	3	OSM32GB3M230C	1SCA116662R1001
32	A2-A3	4	OSM32GB4N1M230C	1SCA118775R1001
63	A2-A3	3	OSM63GB3M230C	1SCA116657R1001
63	A2-A3	4	OSM63GB4N1M230C	1SCA118776R1001
100	A2-A4	3	OSM100GB3M230C	1SCA116679R1001
100	A2-A4	4	OSM100GB4N1M230C	1SCA118779R1001
125	A2-A4	3	OSM125GB3M230C	1SCA116677R1001
125	A2-A4	4	OSM125GB4N1M230C	1SCA118780R1001
160	A2-A4	3	OSM160GB3M230C	1SCA116670R1001
160	A2-A4	4	OSM160GB4N1M230C	1SCA118781R1001
200	B1-B2	3	OSM200B3M230C	1SCA104272R1001
200	B1-B2	3+N	OSM200B3N3M230C	1SCA104323R1001
200	B1-B2	4	OSM200B4N1M230C	1SCA118784R1001
250	B1-B3	3	OSM250B3M230C	1SCA104287R1001
250	B1-B3	3+N	OSM250B3N3M230C	1SCA104290R1001
250	B1-B3	4	OSM250B4N1M230C	1SCA118785R1001
315	B1-B4	3	OSM315B3M230C	1SCA104303R1001
315	B1-B4	3+N	OSM315B3N3M230C	1SCA104306R1001
315	B1-B4	4	OSM315B4N1M230C	1SCA118788R1001
400	B1-B4	3	OSM400B3M230C	1SCA104310R1001
400	B1-B4	3+N	OSM400B3N3M230C	1SCA104312R1001
400	B1-B4	4	OSM400B4N1M230C	1SCA118789R1001
630	C1-C2	3	OSM630B3M230C	1SCA104516R1001
630	C1-C2	3+N	OSM630B3N3M230C	1SCA104535R1001
630	C1-C2	4	OSM630B4N1M230C	1SCA118791R1001
800	C1-C3	3	OSM800B3M230C	1SCA104520R1001
800	C1-C3	3+N	OSM800B3N3M230C	1SCA104536R1001
800	C1-C3	4	OSM800B4N1M230C	1SCA118792R1001
1250	D1	3	OSM1250B3M230C	1SCA112552R1001
1250	D1	3+N	OSM1250B3N3M230C	1SCA112550R1001
1250	D1	4	OSM1250B4N1M230C	1SCA118795R1001

Handles and bolt kits included as standard

Suitable for switches	Handle+shaft kit
OSM32...63	OTV250EMK
OSM100...200	OTV250EMK
OSM250	OTV250EMK
OSM315...400	OTV400EMK
OSM630...800	OTV800EMK
OSM1250	OTV1000EMK



Switch fuses NFC type
Ordering information

Manual operated switch fuses, NFC type, 25…50 A	65
Manual operated switch fuses, NFC type, 125 A	66

Manual operated switch fuses, IEC

Ordering information for NFC type, 25...50 A



OS50GF04FP



OS50GFS40FK

Manual operated switch fuses, NFC type, 25...50 A
Protected tunnel terminals, IP20. Mechanism located at the end of the switch. The handles are IP65 protected, padlockable in the OFF-position and with door interlock in the ON-position.

F = OS Mini range switch fuses from 25 to 32 Amperes
G = Gamma range from switch fuses 50 Amperes

N1 = Non-fused switched neutral on the left side
F = Switched fusible neutral

Front operated

Rated current [A]	Fuse size	Number of poles	Type	Order number
Shaft and handle not included				
25	10x38	3	OS25FF1210-2	1SCA108801R1001
25	10x38	4	OS25FF2210N1-2	1SCA108806R1001
32	14x51	3	OS32FF1214-2	1SCA108888R1001
32	14x51	4	OS32FF2214N1-2	1SCA108889R1001
50	14x51	2	OS50GF02	1SCA116798R1001
50	14x51	3	OS50GF03	1SCA115490R1001
50	14x51	4	OS50GF04F	1SCA115497R1001
With 150 mm shaft and external handle OHB65J6				
25	10x38	3	OS25FF1210	1SCA108636R1001
25	10x38	4	OS25FF2210N1	1SCA108638R1001
32	14x51	3	OS32FF1214	1SCA115498R1001
With 161 mm shaft and external handle OHB45J6				
50	14x51	2	OS50GF02P	1SCA118345R1001
50	14x51	3	OS50GF03P	1SCA115492R1001
50	14x51	4	OS50GF04FP	1SCA115498R1001

Side operated

Shaft and handle not included				
25	10x38	3	OS25FFS3010-2	1SCA108808R1001
32	14x51	3	OS32FFS3014-2	1SCA108890R1001
50	14x51	3	OS50GFS30	1SCA116050R1001
50	14x51	4	OS50GFS40F	1SCA116014R1001
With 70 mm shaft and external handle OHB65J6				
25	10x38	3	OS25FFS3010	1SCA108639R1001
32	14x51	3	OS32FFS3014	1Sca108646R1001
With direct mount handle OHB65D6				
50	14x51	3	OS50GFS30K	1SCA116404R1001
50	14x51	4	OS50GFS40FK	1SCA116425R1001

Manual operated switch fuses, IEC

Ordering information for NFC type, 125 A



OS125GFS40FK

Manual operated switch fuses, NFC type, 125 A

Including terminal bolt set M8x25. Mechanism located at the end of the switch. The handles are IP65 protected, padlockable in the OFF-position and with door interlock in the ON-position.

G = Gamma range from switch fuses 125 Amperes

N1 = Non-fused switched neutral on the left side
F = Switched fusible neutral

Front operated

Rated current [A]	Fuse size	Number of poles	Type	Order number
Shaft and handle not included				
125	22x58	2	OS125GF02	1SCA116852R1001
125	22x58	3	OS125GF03	1SCA115601R1001
125	22x58	4	OS125GF04F	1SCA115605R1001
With 161 mm shaft and external handle OHB65J6				
125	22x58	2	OS125GF02P	1SCA116727R1001
125	22x58	3	OS125GF03P	1SCA115602R1001
125	22x58	4	OS125GF04FP	1SCA115606R1001

Side operated

Shaft and handle not included				
125	22x58	3	OS125GFS30	1SCA115973R1001
125	22x58	4	OS125GFS40F	1SCA115975R1001
With direct mount handle OHB65D6				
125	22x58	3	OS125GFS30K	1SCA115944R1001
125	22x58	4	OS125GFS40FK	1SCA115946R1001

Recommended accessories: Shrouds

Snap-on mounting, grey plastic, IP 3X from front. Transparent shrouds available on request. For more details see page 86.

Suitable for switches	Description	Number of poles	Type	Order number
OS/OSM100G...160G	Long type	3	OSS160GG1L/3	1SCA114764R1001
OS/OSM100G...160G	Short type	3	OSS160GG1S/3	1SCA114766R1001
OS/OSM100G...160G	Long type	4	OSS160GG1L/4	1SCA114765R1001
OS/OSM100G...160G	Short type	4	OSS160GG1S/4	1SCA114767R1001



Fusible disconnect switches, UL/CSA
Ordering information

Fusible disconnect switches, CC and J types, 30A	69
Fusible discconnect switches, J type, 60 A	70
Fusible disconnect switches, J type, 100 A	71
Fusible disconnect switches, J type, 200 A	72
Fusible disconnect switches, J type, 400 A	73
Fusible disconnect switches, J type, 600 A	74
Fusible disconnect switches, L type, 800...1200 A	75

Manual operated fusible disconnect switches, UL/CSA

Ordering information for CC and J types, 30 A



OS30FACC12P



OS30FAJ12

Manual operated fusible disconnect switches, CC and J types, 30 A
Protected tunnel terminals, IP20, cable size 0.5…10 mm², (AWG 18 - 8). Mechanism at the end of the switch. The handle is NEMA 1, 3R, 12 protected, padlockable in the OFF-position and with door interlock in the ON-position.

F = OS Mini range switch fuse 30 Amperes

F = Switched fusible neutral

Front operated

Rated current [A]	Fuse size	Number of poles	Type	Order number
Shaft and handle not included				
30	CC, 30 A	3	OS30FACC12	1SCA108813R1001
30	CC, 30 A	4	OS30FACC22F	1SCA108819R1001
30	J, 30 A	3	OS30FAJ12	1SCA108824R1001
30	J, 30 A	4	OS30FAJ22F	1SCA108829R1001
With 150 mm shaft and external handle OHB65J6				
30	CC, 30 A	3	OS30FACC12P	1SCA108817R1001
30	J, 30 A	3	OS30FAJ12P	1SCA108828R1001
30	J, 30 A	4	OS30FAJ22FP	1SCA108831R1001

Side operated

Shaft and handle not included				
30	CC, 30 A	3	OS30FACCS30	1SCA108822R1001
30	J, 30 A	3	OS30FAJS30	1SCA108834R1001

Manual operated fusible disconnect switches, UL/CSA

Ordering information for J type, 60 A



OS60GJ03P



OS60GJ04FP



OS60GJS40F

Manual operated fusible disconnect switches, J type, 60 A
Protected tunnel terminals, IP20, cable size 2.5…25 mm² (AWG 14 - 4). Mechanism at the end of the switch. The handle is NEMA 1, 3R, 12 protected, padlockable in the OFF-position and with door interlock in the ON-position.

G = OS Gamma range switch fuse 60 Amperes

F = Switched fusible neutral

Front operated

Rated current [A]	Fuse size	Number of poles	Type	Order number
Shaft and handle not included				
60	J, 60 A	2	OS60GJ02	1SCA121900R1001
60	J, 60 A	3	OS60GJ03	1SCA115866R1001
60	J, 60 A	4	OS60GJ04F	1SCA115445R1001
With 161 mm shaft and external handle OHB45J6				
60	J, 60 A	2	OS60GJ02P	1SCA121901R1001
60	J, 60 A	3	OS60GJ03P	1SCA115443R1001
60	J, 60 A	4	OS60GJ04FP	1SCA115446R1001

Side operated

Shaft and handle not included				
60	J, 60 A	3	OS60GJS30	1SCA116051R1001
60	J, 60 A	4	OS60GJS40F	1SCA115970R1001

Manual operated fusible disconnect switches, UL/CSA

Ordering information for J type, 100 A



OS100GJ03P



OS100GJ04FP



OS100GJS30

Manual operated fusible disconnect switches, J type, 100 A
Included terminal bolt set M8X25. Mechanism at the end of the switch. The handle is NEMA 1, 3R, 12 protected, padlockable in the OFF-position and with door interlock in the ON-position.

G = OS Gamma range switch fuses 100 Amperes

F = Switched fusible neutral

Front operated

Rated current [A]	Fuse size	Number of poles	Type	Order number
Shaft and handle not included				
100	J, 100 A	2	OS100GJ02	1SCA121932R1001
100	J, 100 A	3	OS100GJ03	1SCA115436R1001
100	J, 100 A	4	OS100GJ04F	1SCA115438R1001
With 161 mm shaft and external handle OHB65J6				
100	J, 100 A	2	OS100GJ02P	1SCA121933R1001
100	J, 100 A	3	OS100GJ03P	1SCA114639R1001
100	J, 100 A	4	OS100GJ04FP	1SCA115439R1001

Side operated

Shaft and handle not included				
100	J, 100 A	3	OS100GJS30	1SCA115971R1001
100	J, 100 A	4	OS100GJS40F	1SCA115972R1001

Manual operated fusible disconnect switches, UL/CSA

Ordering information for J type, 200 A



OS200J02P



OS200J02P



OS200J04FP



OS200J03K

Manual operated fusible disconnect switches, J type, 200 A

Included terminal bolt set M8X25. Mechanism at the end of the switch. The handle is NEMA 1, 3R, 12 protected, padlockable in the OFF-position and with door interlock in the ON-position.

F = Switched fusible neutral

Front operated

Rated current [A]	Fuse size	Number of poles	Type	Order number
Shaft and handle not included				
200	J, 200 A	2	OS200J02	1SCA107591R1001
200	J, 200 A	3	OS200J03	1SCA022733R6130
200	J, 200 A	4	OS200J04F	1SCA022758R9340
With 210 mm shaft and external handle OHB65J6				
200	J, 200 A	2	OS200J02P	1SCA107598R1001
200	J, 200 A	3	OS200J03P	1SCA022709R9760
200	J, 200 A	4	OS200J04FP	1SCA022758R9770
With direct mount handle OSV200BK				
200	J, 200 A	3	OS200J03K	1SCA022763R5800

Side operated

Shaft and handle not included				
200	J, 200 A	3	OS200JS30	1SCA022871R3910
200	J, 200 A	4	OS200JS40F	1SCA022871R4120
With direct mount handle OHB65D6				
200	J, 200 A	3	OS200JS30K	1SCA022871R4040
200	J, 200 A	4	OS200JS40FK	1SCA022871R4210

Manual operated fusible disconnect switches, UL/CSA

Ordering information for J type, 400 A



OS400J03P



OS400J04FP



OS400J02P



OS400J04FP



OS400J03K



OS400J03P



OS400JS40FK

Manual operated fusible disconnect switches, J type, 400 A
Included terminal bolt set M10X40. Mechanism at the end of the switch. The handle is NEMA 1, 3R, 12 protected, padlockable in the OFF-position and with door interlock in the ON-position.

F = Switched fusible neutral

Front operated

Rated current [A]	Fuse size	Number of poles	Type	Order number
Shaft and handle not included				
400	J, 400 A	2	OS400J02	1SCA107592R1001
400	J, 400 A	3	OS400J03	1SCA022755R0810
400	J, 400 A	4	OS400J04F	1SCA022755R3660
With 250 mm shaft and external handle OHB95J12				
400	J, 400 A	2	OS400J02P	1SCA107596R1001
400	J, 400 A	3	OS400J03P	1SCA022719R1140
400	J, 400 A	4	OS400J04FP	1SCA022755R3740
With direct mount handle OSV400BK				
400	J, 400 A	3	OS400J03K	1SCA117773R1001

Side operated

Shaft and handle not included				
400	J, 400 A	3	OS400JS30	1SCA022871R4980
400	J, 400 A	4	OS400JS40F	1SCA022871R5100
With direct mount handle OHB95D12				
400	J, 400 A	3	OS400JS30K	1SCA022871R5010
400	J, 400 A	4	OS400JS40FK	1SCA022871R5280

Manual operated fusible disconnect switches, UL/CSA

Ordering information for J type, 600 A



OS600J02P



OS600J02P



OS600J03P



OS600J04FP



OS600JS30K

Manual operated fusible disconnect switches, J type, 600 A

Included terminal bolt set M8X25. Mechanism at the end of the switch. The handle is NEMA 1, 3R, 12 protected, padlockable in the OFF-position and with door interlock in the ON-position.

F = Switched fusible neutral

Front operated

Rated current [A]	Fuse size	Number of poles	Type	Order number
Shaft and handle not included				
600	J, 600 A	2	OS600J02	1SCA107593R1001
600	J, 600 A	3	OS600J03	1SCA022825R8610
600	J, 600 A	4	OS600J04F	1SCA022839R3900
With 280 mm shaft and external handle OHB145J12				
600	J, 600 A	2	OS600J02P	1SCA107595R1001
600	J, 600 A	3	OS600J03P	1SCA022825R8870
600	J, 600 A	4	OS600J04FP	1SCA022839R4030
With direct mount handle OSV200BK				
600	J, 600 A	3	OS600J03K	1SCA117774R1001

Side operated

Shaft and handle not included				
600	J, 600 A	3	OS600JS30	1SCA108111R1001
600	J, 600 A	4	OS600JS40F	1SCA108113R1001
With direct mount handle OHB95D12				
600	J, 600 A	3	OS600JS30K	1SCA108112R1001
600	J, 600 A	4	OS600JS40FK	1SCA108114R1001

Manual operated fusible disconnect switches, UL/CSA

Ordering information for L type, 800...1200 A



OS800L04FP

Manual operated fusible disconnect switches, L type, 800...1200 A
Included terminal bolt set OS800: M10X40, OS1200: M10X50. Mechanism at the end of the switch. The handle is NEMA 1, 3R, 12 protected, padlockable in the OFF-position and with door interlock in the ON-position.

F = Switched fusible neutral

Front operated

Rated current [A]	Fuse size	Number of poles	Type	Order number
Shaft and handle not included				
800	L, 800 A	2	OS800L02	1SCA116920R1001
800	L, 800 A	3	OS800L03	1SCA022825R9760
800	L, 800 A	4	OS800L04F	1SCA022839R5350
1200	L, 1200 A	2	OS1200L02	1SCA116924R1001
1200	L, 1200 A	3	OS1200L03	1SCA105467R1001
1200	L, 1200 A	4	OS1200L04F	1SCA105465R1001
With 280 mm shaft and external handle OHB145J12				
800	L, 800 A	2	OS800L02P	1SCA116921R1001
800	L, 800 A	3	OS800L03P	1SCA022825R9920
800	L, 800 A	4	OS800L04FP	1SCA022839R5430
With 395 mm shaft and external handle OHB274J12				
1200	L, 1200 A	2	OS1200L02P	1SCA116925R1001
1200	L, 1200 A	3	OS1200L03P	1SCA105468R1001
1200	L, 1200 A	4	OS1200L04FP	1SCA105466R1001


ASEA
5 TON
ABB

Selection overview
Ordering information

Manual operated switch fuses 32…63	79
Manual operated switch fuses 100…1250	80
Motor operated switch fuses OSM32G…OSM1250	81

Manual operated switch fuses 32...63

Selection overview

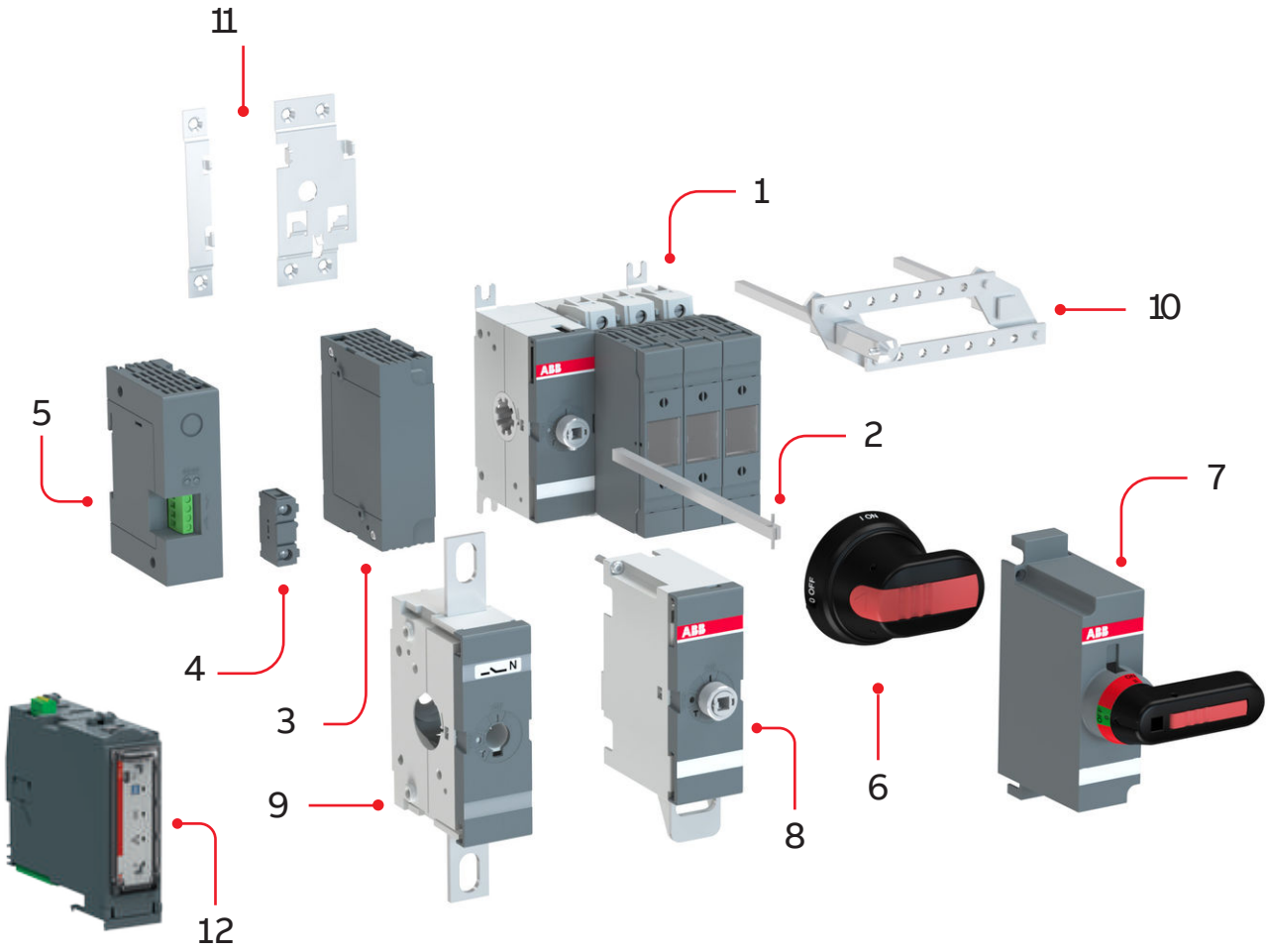

Accessory guide for OS32G...OS63G

1. Switch fuse
2. Shaft
3. Module for auxiliary contacts
4. Auxiliary contact
5. Fuse monitor
6. Pistol type handle
7. Direct mounted handle
8. Electrical interlock
9. Detachable neutral link
10. Conversion kit
11. DIN rail mounting kit
12. Monitoring unit

Please note that listed accessories are not automatically included in your order.
Ordering information for accessories from pages 69-72, 74-75, 77-78, 81 and 84-96.

Manual operated switch fuses 100...1250

Selection overview

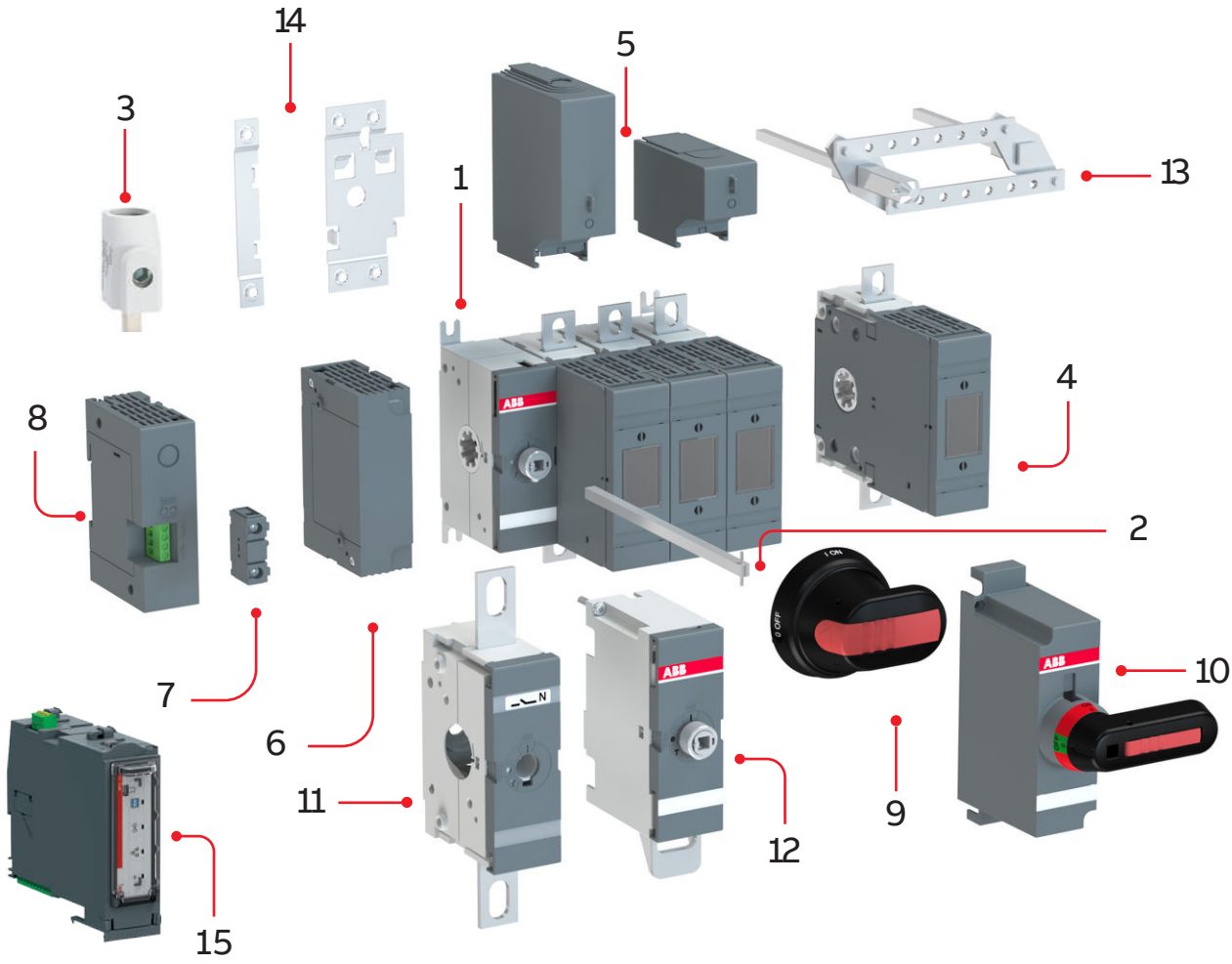

Accessory guide for OS100...1250

1. Switch fuse
2. Shaft
3. Terminal clamp
4. Fourth pole
5. Terminal shroud
6. Module for auxiliary contact
7. Auxiliary contact
8. Fuse monitor
9. Pistol handle
10. Direct mount handle
11. Detachable neutral link
12. Electrical interlock
13. Conversion kit
14. DIN rail mounting kit
15. Monitoring unit

Please note that listed accessories are not automatically included in your order.
Ordering information for accessories from pages 69-72, 74-75, 77-78, 81 and 84-96.

Motor operated switch fuses OSM32G...OSM1250

Selection overview

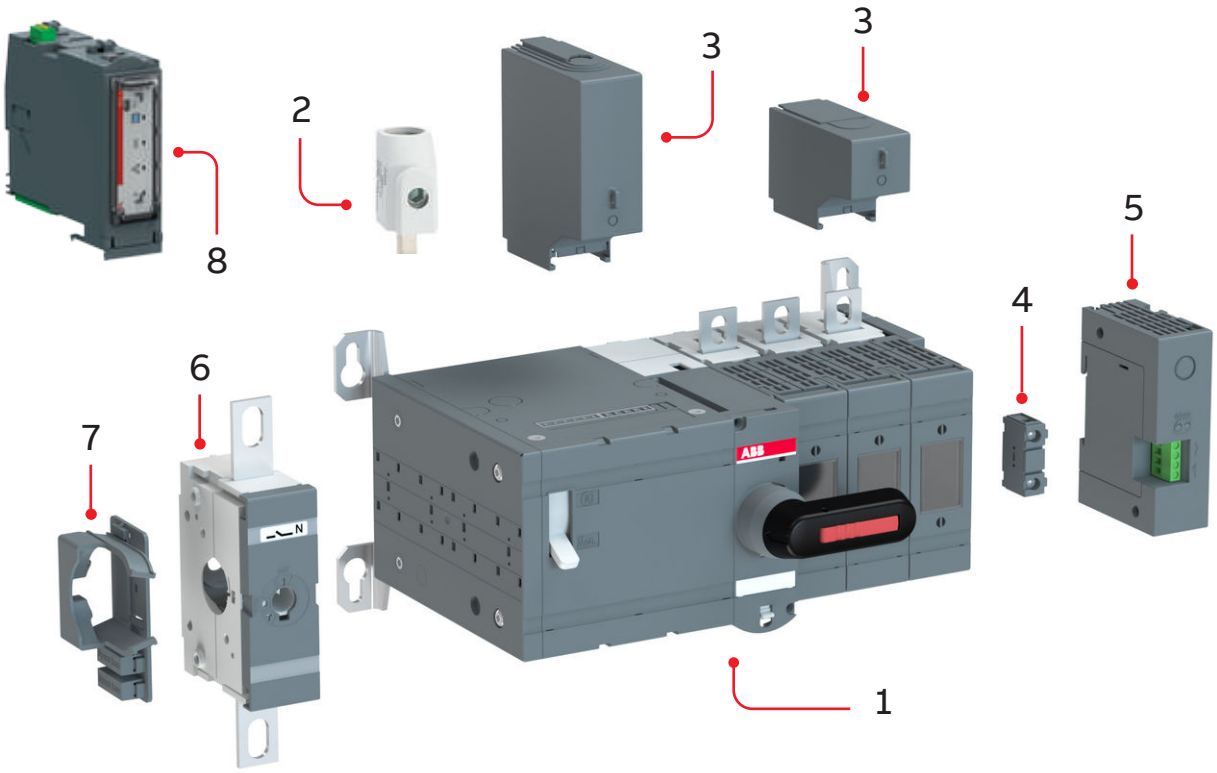

Accessory guide for OSM32G...OSM1250

1. Motorized switch fuse
2. Terminal clamp
3. Terminal shroud
4. Auxiliary contact
5. Fuse monitor
6. Detachable neutral link
7. Storage for handle and fuses
8. Monitoring unit

Please note that listed accessories are not automatically included in your order.
Ordering information for accessories from pages 82-84, 86-88 and 92-93


75t
75t
120t

Accessories
Ordering information

ITS2 monitoring unit	85
Electronic fuse monitor	89
Blown fuse indicators	90
Handles	91
Shafts	95
Auxiliary contacts	98
Fourth poles	103
Neutral links	104
Handle and spare fuse storage clip	105
Terminal shrouds	106
Terminal clamp sets	108
Terminal lugs	111
Conversion kits	112
Cam attachment and interlocks	114
Coils and mounting accessories	115
Spare part kits	116

ITS2 monitoring unit
Greater intelligence comes from within



Real-time measuring and monitoring have never been easier, thanks to the ITS2. Its built-in intelligence means that whether it's supporting a data center, hospital or commercial building, operatives can access its monitoring data and provide an instant response in the event of any system faults.

The result of this fully digital solution? Smarter, data-driven decisions made in real time.

Integrated and future-ready

- Cloud-based connectivity with ABB Ability™ Energy and Asset Manager
- Easy configuration with Ekip Connect
- Configure ITS2 monitoring in just 1 min

Convenience and ease

- One unit to digitalize switches and fusegear also compatible with OT Switch-disconnectors and OS Switch fuses
- Space-saving factory-mounted design
- No need for additional power supply

Safe and reliable

- Ensures continuous operations
- Fuse monitoring functionality (EFM)
- System safety and protection protocols

Visit the website to learn more about ITS2 monitoring unit

Watch the video how to configure ITS2 monitoring unit in 1 minute with Ekip Connect

Watch the video how to add extra protection to your system with Ekip Connect in less than 1 minute

Ease of installation
A busy facility needs any new monitoring equipment to get up and running quickly to avoid operational interruptions.

Installing the ITS2 monitoring is a pain-free, intuitive process, with Ekip Connect used to configure your entire system.

The ITS2 communicates with the main gateway using Modbus RTU as standard option or Modbus TCP, using the add on communication module. The gateway enables direct communication to the ABB Ability™ Energy and Asset Manager using the Ekip Com Hub cartridge module.

The gateway uploads your system data to the cloud-connected ABB Ability™ platform, enabling full control in less than 10 minutes.

Seamless integration
A complete digital solution needs to be compatible with your existing infrastructure and processes. The ITS2 monitoring unit integrates flawlessly both with ABB's switches and fusegear products

- Uses ABB Ability™ Energy and Asset Manager to collect information from enabled ABB devices installed in low-voltage distribution systems
- Monitor the electrical system from anywhere, anytime
- ABB Ability™ Energy and Asset Manager compatible gateways:
  Emax 2 and Tmax circuit breakers, EkipUP and TruONE Automatic Transfer Switches (equipped with Ekip Com Hub) or with Ekip E-Hub via Modbus RS-485.

Connection to ABB Ability™ Energy and Asset Manager for all switches and fusegear with ITS2

Standalone ITS2 Modbus RTU

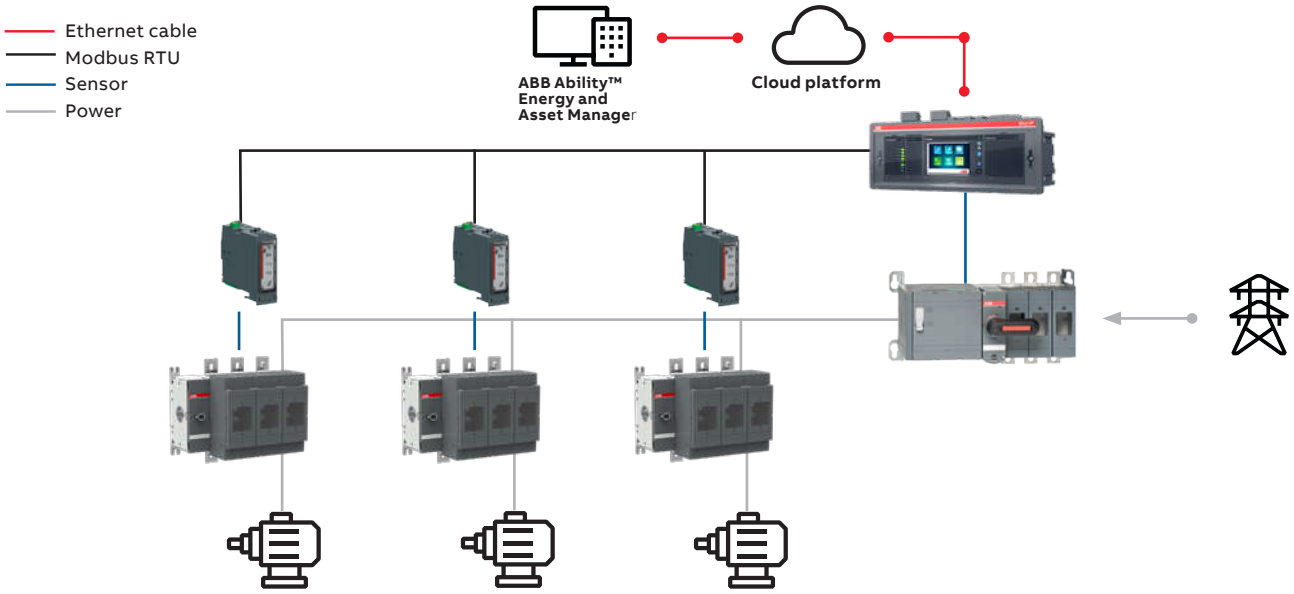

— Learn more about ABB Ability™ Energy and Asset Manager

— Learn more about Ekip Connect 3

Accessories for switch fuses 160…1250 A

Ordering information for ITS2 monitoring unit



ITS2.1 Monitoring unit



OFMZX2



OA1G10

ITS2 monitoring unit

Suitable for switches	Type	Order number	Units/ type [pcs]	Weight/unit [kg]
OS/OSM 160…1250	ITS2.1 Standalone Module	1SEP622724R0001	1	0.5

Accessories that need to be ordered separately

Description	Suitable for switches	Type	Order number	Units/ type [pcs]	Weight/ unit [kg]
Voltage sensing faston terminals package	OS160…630	OFMZX2	1SCA022475R9910	6	0.01
Auxiliary contacts NO	OT160EV…2500E, OS160…1250	OA1G10	1SCA022353R4970	1	0.03

Current transformer requirements

Please note! It is necessary to use current transformers (CT) with the ITS2. Transformers are not included with the unit and must be purchased separately.

Switch size	Primary current	Secondary current	Class	Burden	Quantity
160 A	160 A	1A	0.5s / 0.2 / 0.2s / 0.1	≥2.5VA	3
250 A	250 A	1A	0.5s / 0.2 / 0.2s / 0.1	≥2.5VA	3
400 A	400 A	1A	0.5s / 0.2 / 0.2s / 0.1	≥2.5VA	3
630 A	600 A	1A	0.5s / 0.2 / 0.2s / 0.1	≥2.5VA	3
800 A	800 A	1A	0.5s / 0.2 / 0.2s / 0.1	≥2.5VA	3
1 000 A	1 000 A	1A	0.5s / 0.2 / 0.2s / 0.1	≥2.5VA	3
1 250 A	1 250 A	1A	0.5s / 0.2 / 0.2s / 0.1	≥2.5VA	3
1 600 A	1 600 A	1A	0.5s / 0.2 / 0.2s / 0.1	≥2.5VA	3
2 500 A	2 500 A	1A	0.5s / 0.2 / 0.2s / 0.1	≥2.5VA	3



Ekip Com Modbus TCP-OX

Suitable communication modules (Modbus RTU comes as standard)

Type	Order code
Ekip Com Modbus TCP-OX	1SDA104052R1

Accessories for switch fuses 160...1250 A

Ordering information for ITS2 monitoring unit

ITS2.1: which data can be monitored

Features		
Line Voltage	(V AC)	V12, V23, V31
Phase Voltage	(V AC)	V1N, V2N, V3N
Current	(A)	L1, L2, L3
Active power	(kW)	L1, L2, L3
Reactive power	(kVA)	L1, L2, L3
Cos phi	(Cosϕ)	L1, L2, L3
Power factor	(PF)	Sum
Energy	(kWh)	Sum
Fuse status	(EFM)	L1, L2, L3
Temperature	(°C)	Terminal L2
Switch position		On/Off
Motor Control		by bus
Communication bus		RS485
Protocol		Modbus RTU & TCP

Configurable Modbus RTU parameters	
Default setting	19200 E,8,1 – Default Modbus addr. 3
Baudrates	9600, 19200
Parity, stop- start bits	E,8,1 – O,8,1 – N,8,2 – N,8,1
Modbus address range	1 – 247

Connection data at the ITS2.1 multiplug	
1	24 VDC
2	24 V GND (0V)
3	RS-485 0V
4	RS-485 + (A)
5	RS-485 - (B)

Conductor cross section	
Stranded min.	0,25 mm²
Stranded max.	1,5 mm²
Stranded, with ferrule without plastic sleeve max.	1,5 mm²
Stranded, with ferrule with plastic sleeve max.	0,75 mm²

Accessories for manual and motorized switch fuses 32...1250 A

Ordering information for electronic fuse monitor



OFM260



OFS260



OFD500EA



OFMZX2



OSZ4

Electronic fuse monitor

Includes the auxiliary contacts 1NO + 1NC. More information, see brochure OFM_OFS20GB.

Rated voltage [V]	Approvals	Mounting type	Type	Order number	Weight/ unit [kg]
120...240/AC	IEC, UL and CSA	A	OFM240	1SCA022579R1340	0.2
120...260/AC	IEC	A	OFM260	1SCA022459R8560	0.14
380...600/AC	IEC, UL and CSA	A	OFM600	1SCA022579R1260	0.2
380...690/AC	IEC	A	OFM690	1SCA022459R8480	0.14
100…260/AC	IEC	B	OFS260	1SCA022716R0180	0.16
380…690/AC	IEC	B	OFS690	1SCA022715R9920	0.16
45...140/DC	IEC	B	OFD110EA	1SCA121775R1001	0.155
135...550/DC	IEC	B	OFD500EA	1SCA121776R1001	0.155

[A] Mounting onto the left side of OS20F-40F (OS Mini) with a frame OSZ4 or on mounting plate.
[B] Mounting onto the left side of OS32G-1250 switch fuse (right side of OSM motorized switch fuses) or on DIN-rail or on mounting plate.

Mounting accessories for fuse monitor

Suitable for switches	Wire size range	Type	Order number	Units/ type [pcs]	Weight/ unit [kg]
Crimp terminals					
OS_	1.5 - 2.8 mm 16-14 AWG	OFMZX2	1SCA022475R9910	6	0.01
Mounting frame for OS Mini					
OS20F-40F		OSZ4	1SCA022530R0200	1	0.60

Accessories for manual and motorized switch fuses 32...1250 A

Ordering information for blown fuse indicators



OSD25P3



OSGD50P4



OSGD125P3



OSZX3

Blown fuse indicators (DPMM)

Striker type fuse is needed. See the dimensions in IEC60269-2-1, Section 1A.

Suitable for switches	Type	Order number	Weight/ unit [kg]
OS Mini OS25 ... 32FF			
Suitable for OS Mini 25...32FF_ with cylindrical NFC striker fuses. Auxiliary contact (1x C/O) included. See the ratings on page 78, type OA4			
for 3-pole switches	OSD25P3	1SCA022192R9060	0.10
for 4-pole switches, fused neutral	OSD25P4	1SCA022196R9520	0.10
OS/OSM50GF_			
Auxiliary contacts (3 x C/O in 3-pole, 4 x C/O in 4-pole) included. Ratings: Ith: 5A, AC15: 0.15A/250VAC. NEMA 5A, 125-250 VAC, 1/10 HP			
for 3-pole switches	OSGD50P3	1SCA116401R1001	0.015
for 4-pole switches, fused neutral	OSGD50P4	1SCA115689R1001	0.020
OS/OSM125GF_			
Auxiliary contacts (3 x C/O in 3-pole, 4 x C/O in 4-pole) included. Ratings: Ith: 5A, AC15: 0.15A/250VAC. NEMA 5A, 125-250 VAC, 1/10 HP			
for 3-pole switches	OSGD125P3	1SCA115690R1001	0.025
for 4-pole switches, fused neutral	OSGD125P4	1SCA115692R1001	0.035
OS/OSM250D...800D			
Auxiliary contacts (3xNO + 3xNC in 3-pole and 4xNO + 4xNC in 4-pole) included. See the ratings on page 78, type OA1G_, OA3G_			
for 3-pole switches	OSZX3	1SCA101224R1001	0.15
for 4-pole switches, fused neutral	OSZX4	1SCA101225R1001	0.20

Fuse status and corresponding auxiliary contact position

Auxiliary contact type	Fuse OK	Fuse blown
OA1G_	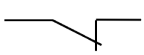	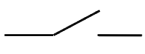
OA3G_	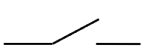	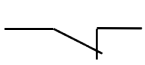

Accessories for manual operated switch fuses 32...1250 A

Ordering information for handles



OHB65J6



OHY65J6



OHG65J6



OHB95J12



OHY95J12T



OHB125J12

Pistol handles for front operated switch fuses

Plastic pistol handles, IP 65, Nema type 1, 3R, 12

Padlockable with 3 padlocks in the OFF-position, door interlock in the ON-position. Screw fixing-from the back side of the handle ensures double insulation.

For shaft diameter 6 mm (for OSMini and OS32...250)

Colour	Handle length [mm]	Type	Order number	Weight/unit [kg]
Black and red-yellow: I-O/ON-OFF, grey: I-O.				
Black	45	OHB45J6	1SCA022380R8770	0.12
Red-yellow	45	OHY45J6	1SCA022380R8930	0.12
Grey	45	OHG45J6	1SCA022380R8850	0.12
Black	65	OHB65J6	1SCA022380R9660	0.12
Red-yellow	65	OHY65J6	1SCA022380R9820	0.12
Grey	65	OHG65J6	1SCA022380R9740	0.12
Black	80	OHB80J6	1SCA022381R0240	0.14
Black and red-yellow: Test/I-O/ON-OFF, grey: Test/I-O.				
Black	45	OHB45J6T	1SCA109870R1001	0.12
Black	65	OHB65J6T	1SCA022399R8110	0.12
Red-yellow	65	OHY65J6T	1SCA022456R9540	0.12
Grey	65	OHG65J6T	1SCA022456R9620	0.12
Black	80	OHB80J6T	1SCA022399R8290	0.14

For shaft diameter 12 mm (for OS315...400)

Colour	Handle length [mm]	Type	Order number	Weight/unit [kg]
Black and red-yellow: I-O/ON-OFF, grey: I-O.				
Black	95	OHB95J12	1SCA022381R0830	0.16
Red-yellow	95	OHY95J12	1SCA022381R1050	0.16
Grey	95	OHG95J12	1SCA022381R0910	0.16
Indication: Test-OFF-ON/Test-O-I				
Black	95	OHB95J12T	1SCA022736R1750	0.16
Red-yellow	95	OHY95J12T	1SCA022736R1910	0.16

For shaft diameter 12 mm (for OS630...800)

Colour	Handle length [mm]	Type	Order number	Weight/unit [kg]
Black and red-yellow: I-O/ON-OFF, grey: I-O.				
Black	125	OHB125J12	1SCA022381R1560	0.16
Red-yellow	125	OHY125J12	1SCA022381R1720	0.16
Grey	125	OHG125J12	1SCA022381R1640	0.16
Black	145	OHB145J12	1SCA022381R2110	0.17
Red-yellow	145	OHY145J12	1SCA022381R2370	0.17
Grey	145	OHG145J12	1SCA022381R2290	0.17
Black	175	OHB175J12	1SCA022381R2450	0.18
Red-yellow	175	OHY175J12	1SCA022381R2700	0.18
Grey	175	OHG175J12	1SCA022381R2610	0.18
Indication: Test-OFF-ON/Test-O-I				
Black	125	OHB125J12T	1SCA022652R2220	0.16
Red-yellow	125	OHY125J12T	1SCA022652R2310	0.16
Black	145	OHB145J12T	1SCA022652R2570	0.17
Red-yellow	145	OHY145J12T	1SCA022652R2650	0.17
Black	175	OHB175J12T	1SCA022708R0740	0.18

- Door interlocking in the ON-position means that the door cannot be opened, when the handle is in the ON-position. This can be defeated to allow authorized personnel access for inspection.
- Handles padlockable in all positions and NEMA4/4X handles are available on request.

Accessories for manual operated switch fuses 32...1250 A

Ordering information for handles



OHB274/330J12



OHY274J12



OHM_

Pistol handles for front operated switch fuses

Plastic pistol handles, IP 65, Nema type 1, 3R, 12

Padlockable with 3 padlocks in the OFF-position, door interlock in the ON-position. Screw fixing from the back side of the handle ensures double insulation.

For shaft diameter 12 mm (for OS1200...1250)

Colour	Handle length [mm]	Type	Order number	Weight/unit [kg]
Black and red-yellow: I-O/ON-OFF.				
Black	274	OHB274J12	1SCA115920R1001	0.54
Red-yellow	274	OHY274J12	1SCA115919R1001	0.54
Black	330	OHB330J12	1SCA115922R1001	0.58
Red-yellow	330	OHY330J12	1SCA115921R1001	0.58
Black	2x150	OHB150J12P	1SCA022865R9430	0.17
Red-yellow	2x150	OHY150J12P	1SCA101586R1001	0.17
Black	2x200	OHB200J12P	1SCA022865R9510	0.40
Red-yellow	2x200	OHY200J12P	1SCA101587R1001	0.40
Indication: Test-OFF-ON/Test-O-I				
Black	274	OHB274J12T	1SCA120250R1001	0.54
Black	330	OHB330J12T	1SCA120252R1001	0.58
Black	2x200	OHB200J12PT	1SCA106510R1001	0.40

- Door interlocking in the ON-position means that the door cannot be opened, when the handle is in the ON-position. This can be defeated to allow authorized personnel access for inspection.
- Handles padlockable in all positions and NEMA4/4X handles are available on request.

Stainless steel pistol handles, IP66, NEMA 4X

Padlockable with 3 padlocks in the OFF-position, door interlock in the ON-position, indication: I-O/ON-OFF

For shaft diameter 6 mm (for OSMini and OS32...250)

Colour	Handle length [mm]	Type	Order number	Weight/unit [kg]
Metallic	45	OHM45L6	1SCA111295R1001	0.70
Metallic	65	OHM65L6	1SCA022739R1070	0.73
For shaft diameter 12 mm				
Metallic	125	OHM125L12	1SCA022739R1150	0.76
Metallic	175	OHM175L12	1SCA022739R1230	0.83
Metallic	275	OHM275L12	1SCA022832R4840	0.96

Accessories for manual operated switch fuses 32...1250 A

Ordering information for handles



OHB65J6E00S



OHY65J6E00S



OHZX14

Pistol handles for side operated switch fuses

Plastic pistol handles, IP 65, Nema type 1, 3R, 12

For mounting on the side of the enclosure. Padlockable with three padlocks in the OFF-position, door interlock in the ON-position, IP 65. The position indications are rotated 90°. If the handle is mounted on the front of the door, a standard handle can be used as well.

For shaft diameter 6 mm

Colour	Handle length [mm]	Type	Order number	Weight/unit [kg]
Plastic handles, black and red-yellow: I-O/ON-OFF, grey: I-O.				
Black	65	OHB65J6E00S	1SCA022382R9850	0.12
Red-yellow	65	OHY65J6E00S	1SCA022382R9930	0.12
Grey	65	OHG65J6E00S	1SCA022383R4510	0.12
Plastic handles, black and red-yellow: Test/I-O/ON-OFF, grey: Test/I-O.				
Black	65	OHB65J6TE00S	1SCA109016R1001	0.12
Red-yellow	65	OHY65J6TE00S	1SCA022688R0140	0.12
Grey	65	OHG65J6TE00S	1SCA109014R1001	0.12

For shaft diameter 12 mm

Plastic handles, indication I-O/ON-OFF				
Black	145	OHB145J12E00S	1SCA022679R9700	0.17

- Door interlocking in the ON-position means that the door cannot be opened, when the handle is in the ON-position. This can be defeated to allow authorized personnel access for inspection.
- Handles padlockable in all positions are available on request.

Extension ring for pistol handles

Suitable for handles	Colour	Type	Order number	Weight/unit [kg]
OHB_	Black	OHZX14	1SCA022851R6590	0.06

Accessories for manual operated switch fuses 32...1250 A

Ordering information for handles



OSV250DK



OSV400DK



OSV1250DK



OHB4



OFAE506

Direct mount handles for front operated switch fuses

Panel board handle, can be padlocked in the OFF-position. Includes a special shaft. The handle can also be used with a standard shaft as padlocking device.

Suitable for OS 32G...1250

Suitable for switches	Colour	Type	Order number	Weight/unit [kg]
Indication: Test OFF-ON/Test O-I indication Padlockable with three padlocks in the OFF-position, optionally also in the ON-position. Includes shaft and mechanism cover.				
OS32G...160G (not OS_GJ types)	Black	OSV200BK	1SCA022779R7530	0.14
OS200B/J	Red-yellow	OSVY200BK	1SCA022779R7700	0.14
OS60GJ, OS100GJ	Black	OSV250DK	1SCA022763R3510	0.16
OS200D...250D/B	Black	OSV250DK	1SCA022763R3510	0.16
OS200D...250D/B	Red-yellow	OSVY250DK	1SCA022778R6500	0.16
OS400D	Black	OSV400DK	1SCA022763R4230	0.34
OS400D	Red-yellow	OSVY400DK	1SCA022779R5590	0.34
OS315...400B/J	Black	OSV400BK	1SCA022763R3930	0.33
OS315...400B/J	Red-yellow	OSVY400BK	1SCA022779R5830	0.33
OS600...800	Black	OSV800DK	1SCA107794R1001	1.1
OS600...800	Red-yellow	OSVY800DK	1SCA108703R1001	1.1
OS1200...OS1250	Black	OSV1250DK	1SCA107797R1001	1.5
OS1200...OS1250	Red-yellow	OSVY1250DK	1SCA108702R1001	1.5

Direct mount handles for side operated switch fuses

Panel board handle, can be padlocked in the OFF-position. Includes a special shaft. The handle can also be used with a standard shaft as padlocking device.

Suitable for OS Mini

Padlockable with three padlocks in the OFF- position when the door is open. Max. bail dia 6 mm.				
OS20F...40F_	Black	OHB4	1SCA022439R4050	0.05

Fuse replacement handles

For DIN-fuse sizes	Type	Order number	Weights/unit [kg]
000, 00, 0, 1, 2, 3, 4	OFAE506	1SCA128175R1001	0.2

Direct mount handles for front operated switch fuses

Panel board handle, can be padlocked in the OFF-position. Includes a special shaft. The handle can also be used with a standard shaft as padlocking device.

Suitable for OS Mini

Indication: I-O/ON-OFF/TEST				
Padlockable with two padlocks in the OFF- and TEST-positions when the door is open. Max. bail dia 8 mm.				
OS16F...40F_	Black	OHBS5	1SCA109015R1001	0.05

Accessories for switch fuses OS Mini 20...40 A

Ordering information for shafts



OXP6X_



OXP_X_-45

Extended shafts

Shaft length [mm]	Front operated H [mm]	Side operated H [mm]	Type	Order number	Weight/ unit [kg]
For OS 16...35 (Mini)[2], shaft diameter 6 mm					
150	135...210	154...166	OXP6X150[5]	1SCA022295R5600	0.05
170	155...230	174...186	OXP6X170	1SCA022064R1180	0.03
265	250...325	269...281	OXP6X265	1SCA108225R1001	0.08
400	385...460	404...416	OXP6X400	1SCA108226R1001	0.12
210	187...254		OXP6X210-45[1]	1SCA022294R4230	0.06
290	267...334		OXP6X290-45[1]	1SCA022304R4290	0.08
360	337...404		OXP6X360-45[1]	1SCA022341R4640	0.10
For OS 40 (Mini)[2], shaft diameter 6 mm					
150	135...210	235...243	OXP6X150[5]	1SCA022295R5600	0.05
170	155...230	255...363	OXP6X170	1SCA108224R1001	0.05
265	250...325	352...360	OXP6X265	1SCA108225R1001	0.08
400	385...460	487...495	OXP6X400	1SCA108226R1001	0.12
210	187...254		OXP6X210-45[1]	1SCA022294R4230	0.06
290	267...334		OXP6X290-45[1]	1SCA022304R4290	0.08
360	337...404		OXP6X360-45[1]	1SCA022341R4640	0.10
For OS 32G...63G[4], shaft diameter 6 mm					
63		161...167	OXP6X63	1SCA111010R1001	0.02
90		188...194	OXP6X90	1SCA022064R1180	0.03
130	127...174[6]	228...234	OXP6X130	1SCA022057R0570	0.04
161	138...205		OXP6X161[3]	1SCA022067R1760	0.05
210	187...254		OXPX210	1SCA022295R6080	0.06
290	267...334		OXP6X290	1SCA022042R6370	0.08
360	337...404		OXP6X360	1SCA022042R6530	0.10
430	407...474		OXP6X430	1SCA022056R6030	0.12
210	187...254		OXP6X210-45[1]	1SCA022294R4230	0.06
290	267...334		OXP6X290-45[1]	1SCA022304R4290	0.08
360	337...404		OXP6X360-45[1]	1SCA022341R4640	0.10

[1] The shaft position is rotated 45 degrees.
[2] Side operated, 4-pole: add 36 mm.
[3] Included as standard in P-types.
[4] Side operated 3-pole OS60GJ: add 33mm, 4-pole types: OS32...63GD/GB: add 23.5 mm, OS60GJ: add 68mm.
[5] Included as standard in front operated types.
[6] OS32...63GB/GF: 115...174.

Accessories for manual operated switch fuses 32...1250 A

Ordering information for shafts



OXP6X_



OXP_X_-45



OHP12X_

Extended shafts

Shaft length [mm]	 Front operated H [mm]	 Side operated H [mm]	Type	Order number	Weight/ unit [kg]
For OS100G...160G[2] , shaft diameter 6 mm					
63		161…167	OXP6X63	1SCA111010R1001	0.02
90		188…194	OXP6X90	1SCA022064R1180	0.03
130	127…174[4]	228…234	OXP6X130	1SCA022057R0570	0.04
161	138…205		OXP6X161[3]	1SCA022067R1760	0.05
210	187…254		OXP6X210	1SCA022295R6080	0.06
290	267…334		OXP6X290	1SCA022042R6370	0.08
360	337…404		OXP6X360	1SCA022042R6530	0.10
430	407…474		OXP6X430	1SCA022056R6030	0.12
210	187…254		OXP6X210-45[1]	1SCA022294R4230	0.06
290	267…334		OXP6X290-45[1]	1SCA022304R4290	0.08
360	337…404		OXP6X360-45[1]	1SCA022341R4640	0.10
For OS 200...250 DIN-type, shaft diameter 6 mm					
161	160...205	321...327	OXP6X161	1SCA022067R1760	0.05
210	189...254	370...376	OXP6X210[3]	1SCA022295R6080	0.06
290	269...334		OXP6X290	1SCA022042R6370	0.08
For OS 200...250 BS-type, shaft diameter 6 mm					
161	140…205	321...327	OXP6X161	1SCA022067R1760	0.05
210	189…254	370...376	OXP6X210[3]	1SCA022295R6080	0.06
290	269…334		OXP6X290	1SCA022042R6370	0.08
For OS 315...400, shaft diameter 12 mm					
250	230…325	489...495	OXP12X250[3]	1SCA022325R6980	0.30
280	260…355	519...525	OXP12X280	1SCA022137R5140	0.30
325	305…400		OXP12X325	1SCA022042R5810	0.36
395	375…470		OXP12X395	1SCA022042R5990	0.43
465	445…540		OXP12X465	1SCA022042R6020	0.51
535	515…610		OXP12X535	1SCA022042R6110	0.59

[1] The shaft position is rotated 45 degrees.
[2] Side operated, 4-pole: add 35 mm.
[3] Included as standard in P-types.
[4] OS100GJ: 113…174, OS100GB…160GB: 121…174.

Accessories for manual operated switch fuses 32...1250 A

Ordering information for shafts



OXP12X_



OXP12X250-45



OETLZX95

Extended shafts

Shaft length [mm]	 Front operated H [mm]	 Side operated H [mm]	Type	Order number	Weight/ unit [kg]
For OS 630...800, shaft diameter 12 mm					
280	258...382	645...651	OXP12X280[2]	1SCA022137R5140	0.30
325	303...427		OXP12X325	1SCA022042R5810	0.40
395	373...497		OXP12X395	1SCA022042R5990	0.50
465	443...567		OXP12X465	1SCA022042R6020	0.60
535	513...637		OXP12X535	1SCA022042R6110	0.70
280	258...382		OXP12X280-45[1]	1SCA022382R0800	0.30
325	303...427		OXP12X325-45[1]	1SCA022304R4450	0.40
For OS 1200...1250, shaft diameter 12 mm					
395	366…495[3]	371...500[4]	OXP12X395[2]	1SCA022042R5990	0.43
465	436…565[3]	441...570[4]	OXP12X465	1SCA022042R6020	0.51
535	506…635[3]	441...571[4]	OXP12X535	1SCA022042R6110	0.59

[1] The shaft position is rotated 45 degrees.
[2] Included as standard in front operated P-types.
[3] H with handle OH_274/330J12.
[4] H with handle OHB150/200J12P.

Shaft extension socket

For extending the shaft of combination attachment.

Suitable for shaft with diameter [mm]	Type	Order number	Weight/ unit [kg]
12	OETLZX95	1SCA022083R5620	0.04

Accessories for switch fuses OS Mini 20...40 A

Ordering information for auxiliary contacts



OA4B10



MCB-10



OA3G01



OSZ4



OESAZX169

Auxiliary contacts for OS20F_...40F_ (OS Mini)

Units/type = 1 piece

Mounting to the switch mechanism

Description	Type	Order number	Weight/unit [kg]
Change over contacts Auxiliary/test contacts. Max. two change over contacts.			
See function chart below	OA4B1C	1SCA022193R0150	0.03
Single pole contacts > 3 mm contact gap.			
1 NO	OA4B10	1SCA022276R9050	0.03
1 NC	OA4B01	1SCA022276R9210	0.03

Mounting on the side of the switch

Description	Type	Order number	Weight/unit [kg]
Mounting on the side of the switch with aux.contact frame OESAZX169			
1NO	MCB-10	1SCA022150R5110	0.03
1NC	MCB-01	1SCA022150R5370	0.03
Snap-on mounting on the switch, by using a frame OSZ4, IP20			
NO contacts are provided with a positive opening feature. **Types _AU have gold plated contacts for harsh environments and low operating voltages.**			
1 NO	OA1G10	1SCA022353R4970	0.03
1 NC	OA3G01	1SCA022456R7410	0.03
1 NO	OA1G10AU	1SCA022436R7910	0.03
1 NC	OA3G01AU	1SCA022819R5260	0.03

Mounting frames for auxiliary contacts of OS20F_...40F_ (OS Mini)

Description	Amount of auxiliary contacts [pcs]	Type	Order number	Weight/unit [kg]
Frame for auxiliary contacts OA1G10 and OA3G01 and for fuse monitor OFM_				
Mounting on the left side of the switch	max. 6	OSZ4	1SCA022530R0200	0.06
Frame for MCB-_ auxiliary contacts. Not suitable for side operated switches				
Mounting on the right side of the switch	max. 6	OESAZX169	1SCA022196R9360	0.06

Function chart, change over contacts OA4B1C / OS Mini

Handle position	Main contacts	Aux./Test contacts N.O.
Test	open	closed
0	open	open
I	closed	closed

Accessories for manual operated switch fuses 32...1250 A

Ordering information for auxiliary contacts



OA1G10, OA3G01

Auxiliary contact blocks for OS/OSM32G...1250

Suitable for switches	Description	Protection degree	Type	Order number	Weight/unit [kg]
OS/OSM32G...1250	1NO	IP20	OA1G10	1SCA022353R4970	0.03
OS/OSM32G...1250	1NC	IP20	OA3G01	1SCA022456R7410	0.03
OS/OSM32G...1250	1NO	IP20	OA1G10AU[1)]	1SCA022436R7910	0.03
OS/OSM32G...1250	1NC	IP20	OA3G01AU[1)]	1SCA022819R5260	0.03

[1)]Types _AU have gold plated contacts for harsh environments and low operating voltages.

Mounting under the mechanism cover

The “test” contacts operate in ON- and OFF-positions as well as when the handle is turned to TEST-position = 45 degrees over the OFF-position. The “test tindication” contacts operate only when the handle is turned to TEST-position. See the function table below. The OA1G10 (N.O.) or OA3G01 (N.C.) auxiliary contact blocks can be used as standard auxiliary contacts, “test” or “test indication” contacts. The desired functions are achieved when an auxiliary contact block is installed in a specific place shown in the mounting instruction. In order to activate the “test” and “test indication” features, a handle with test function is required. See the optional handles, pages 71-74.

Function table of OS/OSM32G...1250 auxiliary contacts

Handle position	Main contacts	Aux./Test contacts N.O.	Test indication contacts N.O
Test	open	closed	closed
0	open	open	open
I	closed	closed	open

Maximum number of contact blocks, “Aux./test” contacts and “test indication” contacts, see the table below.
Standard versions include all except for N3-types, which are equipped with integrated neutral through the mechanism.

Maximum number of auxiliary contacts under the mechanism cover

	OS/OSM32G...250		OS/OSM315...800		OS/OSM1200...1250	
Pole version	Standard	N3	Standard	N3	Standard	N3
Maximum number of contact blocks	4	0	8	4	12	8
Aux./Test contacts	4	0	4	2	8[1)]	6[2)]
Test indication contacts	2	0	4	2	4	2

For contact timing, see page 81.
[1)] 6 aux/test contacts and 2 early operation aux./test contacts.
[2)] 4 aux/test contacts and 2 early operation aux./test contacts.

Mounting on the left side of the OS switch fuse:

Maximum 8 auxiliary contact blocks (N.O. or N.C.) with the OEA28 module. Side operated types: OS_S30..._S40 types only.

Mounting on the right side of the OSM motorized switch fuse:

Maximum 4 auxiliary contact blocks (N.O. or N.C.), snap-on mounting

Mounting plate for auxiliary contacts

Mount on the switch mechanism, max. 3 auxiliary contacts.

Suitable for switches	Type	Order number
R: Mounting on the right side of the switch L: mounting on the left side of the switch		
0S100G_...200G_	OEA30R	1SCA131817R1001
OS100G_...200G_	OEA30L	1SCA131816R1001

Accessories for manual operated switch fuses 32...1250 A

Technical information for auxiliary contacts



OEA28

Module for auxiliary contacts for OS32...1250

Description	Type	Order number	Weight/unit [kg]
Screw mounting to the left side of the switch	OEA28	1SCA022714R8810	0.04

Performance data for auxiliary contacts according to IEC 60947-5-1

OA1G_, OA3G_	
U_i/[V]	690
U_{imp}/[kV]	4
Pollution degree	3
I_{th}/[A]	16
Cable size	1...2 x 0,75...2.5m²
Maximum fuse	16 A/gG
NEMA	A600,R300
Wire size	18 - 14AWG, 1 (2)

OA1G_, OA3G_

	AC15		**DC12**			**DC13**
Ue /[V]	**Ie/[A]**	**Ue/[V]**	**Ie/[A]**	**P/[W]**	**Ie/[A]**	**P/[W]**
230	6	24	10	240	2	48
400	4	72	4	288	0.8	58
690	2	125	2	250	0.55	69
		250	0.55	138	0.27	68
		440	0.1	44		

OA4_	
EN61058-1	
U_i/[V]	400
I_{th}/[A]	10
I_8	400V AC
	10 (4) A, 10E3
	6 (2,5) A, 50E3
NEMA	10 A, 125-250V AC, 1/4 HP
M3 Screw connection	

MCB_

IEC60947-5-1				
U_i/[V]	690			
I_{th}/[A]	10			
		AC12	**AC15**	**DC13**
I_e/[A]	24V	10	8	5
	110V	10	8	11
	220/240V	10	6	0,55
	250V		4	0,55
	380/415V		4	
	660/690V		2	
NEMA	A600, 10A, 600VAC			

Accessories for switch fuses OS Mini 20...40A

Technical information for auxiliary contacts

Handle indications and functions

- The handle indicates the position of the contacts with complete reliability in all situations. If the contacts are welded together, the handle doesn´t reach the OFF-position but remains between ON and OFF, maintaining the door interlock and padlocking is not possible to do.
- When operating the switch fuse to the TEST-position with a test handle the test auxiliary contacts change position. The main contacts remain open.

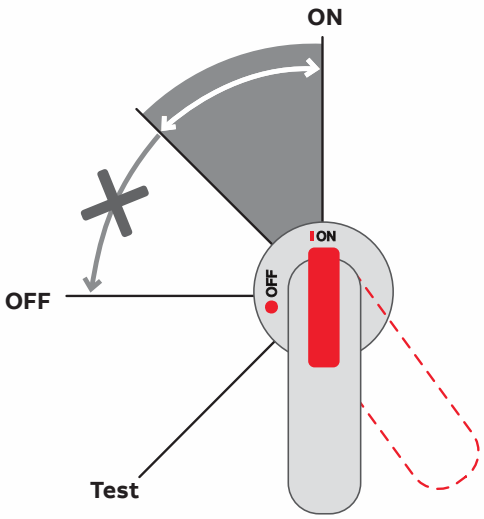

ON and OFF-functions of main and auxiliary contacts

Example

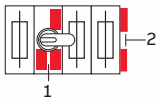

Places of auxiliary contacts and Test ind.

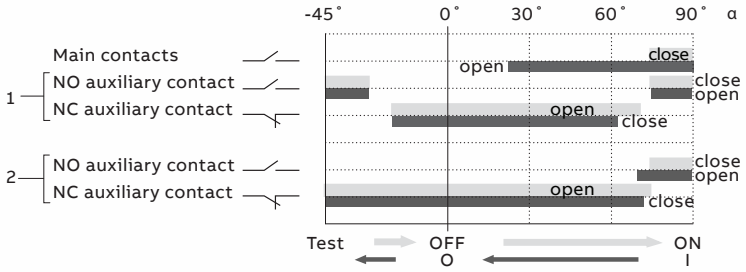

OS Mini

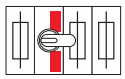

OA4B1C, 1 NO-NC

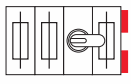

OA1G10, 1NO
OA3G01, 1NC

Change over contacts

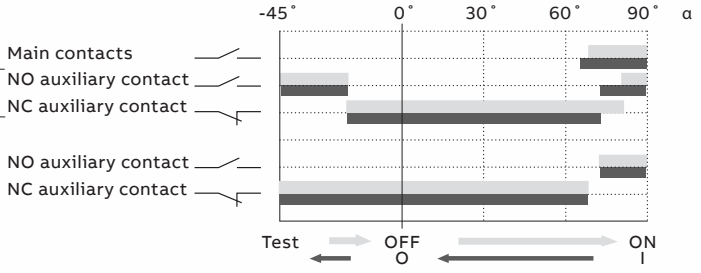

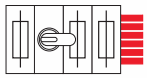

MCB-10 + OESAZX169, 1NO
MCB-01 + OESAZX169, 1NC

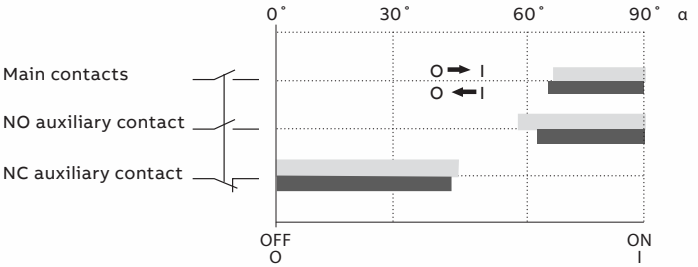

Accessories for manual operated switch fuses 32...1250 A

Technical information for auxiliary contacts

ON- and OFF-functions of main and auxiliary contacts

OS/OSM32G...1250

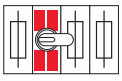

OS_, OSM

OA1G10, 1NO
OA3G01, 1NC

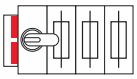

OS_

OA1G10, 1NO
OA3G01, 1NC
+ OEA28

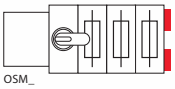

OSM_

OA1G10, 1NO
OA3G01, 1NC

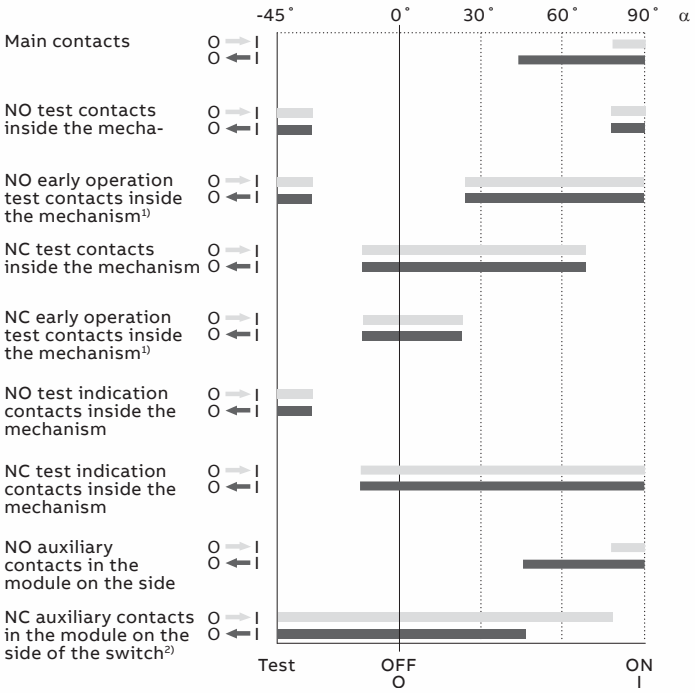

1) OS/OSM1200...1250 only
2) Also OSM32G...1250 mounted on the right side of the switch

Accessories for manual operated switch fuses 32...1250 A

Ordering information for fourth poles



OSP200-400D



OSP160GN



OSP250N



OSP800N

Fourth poles

Snap-on mounting to the side of the switch (not suitable for motorized OSM-types).

Suitable for 3-pole switches	Mounting side	Type	Order number	Weight/unit [kg]
Switched fusible				
OS100GB...160GB	Left/right	OSP160GB	1SCA114769R1001	0.45
OS125GD...160GD	Left/right	OSP160GD	1SCA114768R1001	0.45
OS200B	Left/right	OSP200B	1SCA022735R9180	1.20
OS200D	Left/right	OSP200D	1SCA022735R8960	1.20
OS200J	Left/right	OSP200J	1SCA022735R9000	1.20
OS250B	Left/right	OSP250B	1SCA022770R4030	1.20
OS250D	Left/right	OSP250D	1SCA022735R9340	1.20
OS315B...400B	Left/right	OSP400B	1SCA022770R3140	2.00
OS400D	Left/right	OSP400D	1SCA022770R3220	2.00
OS400J	Left/right	OSP400J	1SCA151737R1001	2.00
OS600J	Left/right	OSP600J	1SCA151731R1001	4.20
OS630...800D	Left/right	OSP800D	1SCA100433R1001	4.20
OS630...800B	Left/right	OSP800B	1SCA100434R1001	4.20
OS800L	Left/right	OSP800L	1SCA151732R1001	4.20
OS1200L	Left/right	OSP1200L	1SCA151730R1001	7.20
OS1250D	Left/right	OSP1250D	1SCA107946R1001	7.20
OS1250DA	Left/right	OSP1250DA	1SCA112402R1001	7.20
OS1250B	Left/right	OSP1250B	1SCA107950R1001	7.20
Switched				
OS100G...160G	Left/right	OSP160GN	1SCA114770R1001	0.45
OS200_	Left/right	OSP200N	1SCA022735R8700	1.20
OS250_	Left/right	OSP250N	1SCA022735R9260	1.20
OS400_	Left/right	OSP400N	1SCA022770R3490	1.20
OS630...800	Left/right	OSP800N	1SCA100432R1001	4.40
OS1200...1250	Left/right	OSP1250N	1SCA107943R1001	7.20

Accessories for manual and motorized switch fuses 20 ...1250 A

Ordering information for neutral links



OSZ1



OXN250



OXN400



OXN800S

Neutral links

For OS20F...OS40F

Detachable, mounting onto base plate or DIN-rail

Max. wire	H/W/D [mm]	Mounting holes	Type	Order number	Weight/unit [kg]
16 mm²	39/41/40	ø 4.2, distance 35	OESAZX171	1SCA022197R2580	0.06

For OS/OSM 32G...160G

Detachable, mounting onto the base plate or DIN-rail.

Max. wire	H/W/D [mm]	Mounting holes	Type	Order number	Weight/unit [kg]
16 mm² Cu	39/41/40	ø 4.2, distance 32	OSZ1	1SCA022481R3710	0.06
35 mm² Cu	39/44/45	ø 4.2, distance 35	OSZ2	1SCA022481R3800	0.07

For OS/OSM 100G...1250

Mounting with screws (included) onto either side of the switch (OXN250 to OS200...250) or on the base plate (OXN250...1250) according the table below.

Suitable for switches	Type	Order number	Weight/unit [kg]
Detachable, mounting on the switch			
OS200...250	OXN250	1SCA022752R9950	0.40
Detachable, mounting on the base plate			
OS/OSM32G...250	OXN250	1SCA022752R9950	0.40
OS/OSM315...400	OXN400	1SCA022770R3060	0.70
OS/OSM630...800	OXN800S	1SCA022831R4880	1.20
OS/OSM1250	OXN1250S	1SCA104163R1001	2.50

Accessories for manual and motorized switch fuses 32…1250 A

Ordering information for handle and spare fuse storage clip



OTVS1



OTVS2



PB200 high

Solid links

Suitable for switches	Type	Order number	Weight/unit [kg]
OS32GD...OS160GD	OFAW00	1SCA022003R9680	0.08
OS200…250B, J	OEZNL1	1SCA022723R7400	0.19
OS600J, 800…1200L	OEZNL8	1SCA113998R1001	0.58
OS1250B	OEZNL10	1SCA116437R1001	0.60
OS250 D	OFAW1	1SCA022003R9760	0.15
OS400 D	OFAW2	1SCA022003R9840	0.24
OS630/800 D	OFAW3	1SCA022003R9920	0.28
OS1250 D	OFAW4	1SCA022842R5440	0.665
OS1250 D	OFAW4a	1SCA148430R1001	0.665

Handle and spare fuse storage clip for OSM

Handle and two spare fuses (for motor operator) can be stored on the OTVS_. OTVS_ can be installed on the left side of the motorized switch-fuse OSM_. Snap-on mounting, no tools required. On OSM1250, the size of the handle prevents the installation onto the switch frame. However, the handle clip can be separately installed on the panel frame and the fuse holder clip onto the switch frame.

Suitable for switches	Type	Order number	Weight/unit [kg]
OSM32G...250	OTVS1	1SCA111413R1001	0.02
OSM315...1250	OTVS2	1SCA111414R1001	0.04

Phase barriers

3-pole switch fuses need 4 barriers and 4-pole switch fuses need 6 barriers for full protection. Phase barriers type "PB200 high" suitable for OS315 - OS400 must be cut to 55mm width.

Suitable for switches	No. of poles	Height h[mm]	Type	Order number	Units/type [pcs]
OS100G…OS200	3	-	OSB160/4	1SCA131820R1001	4
OS100G…OS200	3	-	OSB160/6	1SCA131821R1001	6
OS250	3	-	OSB250/4	1SCA131822R1001	4
OS250	4	-	OSB250/6	1SCA131823R1001	6
OS315, OS400	3	200	PB200 high	1SDA054972R1	4
OS315, OS400	4	200	PB200 high	1SDA054973R1	6

Accessories for manual and motorized switch fuses 32...1250 A

Ordering information for terminal shrouds


OSS200G1L


OSS200G1S


OSS250G1L


OSS800G1L


OSS800G1S


OSS250G1SH

Terminal shrouds

Suitable for switches	Description	Type	Order number	Units/type [pcs]	Weight/ unit [kg]
Pack of single pole terminal shrouds					
Snap-on mounting, grey plastic, IP 3X from front. Transparent shrouds available on request.					
OS/OSM100G...160G, OS200GB	Long type	OSS160GG1L/3	1SCA114764R1001	3	0.08
OS/OSM100G...160G, OS200GB	Short type	OSS160GG1S/3	1SCA114766R1001	3	0.05
OS/OSM100G...160G, OS200GB	Long type	OSS160GG1L/4	1SCA114765R1001	4	0.11
OS/OSM100G...160G, OS200GB	Short type	OSS160GG1S/4	1SCA114767R1001	4	0.07
OS/OSM200	Long type	OSS200G1L/3	1SCA022731R8910	3	0.09
OS/OSM200	Short type	OSS200G1S/3	1SCA022732R0130	3	0.06
OS/OSM200	Long type	OSS200G1L/4	1SCA022731R9040	4	0.12
OS/OSM200	Short type	OSS200G1S/4	1SCA022732R0050	4	0.08
OS/OSM250	Long type	OSS250G1L/3	1SCA022731R9390	3	0.09
OS/OSM250	Short type	OSS250G1S/3	1SCA022731R9550	3	0.06
OS/OSM250	Long type	OSS250G1L/4	1SCA022731R9470	4	0.12
OS/OSM250	Short type	OSS250G1S/4	1SCA022731R9630	4	0.08
OS/OSM315...400	Long type	OSS400G1L/3	1SCA022776R6650	3	0.18
OS/OSM315...400	Short type	OSS400G1S/3	1SCA022776R6900	3	0.10
OS/OSM315...400	Long type	OSS400G1L/4	1SCA022776R6730	4	0.25
OS/OSM315...400	Short type	OSS400G1S/4	1SCA022776R7030	4	0.15
OS/OSM600...800	Long type	OSS800G1L/3	1SCA022776R7200	3	0.53
OS/OSM600...800	Short type	OSS800G1S/3	1SCA022776R7540	3	0.21
OS/OSM600...800	Long type	OSS800G1L/4	1SCA022776R7380	4	0.70
OS/OSM600...800	Short type	OSS800G1S/4	1SCA022776R7460	4	0.28
OS1200...1250/ OSM1250	Long type	OSS1250G1L/3	1SCA107938R1001	3	0.76
OS1200...1250/ OSM1250	Short type	OSS1250G1S/3	1SCA107939R1001	3	0.40
OS1200...1250/ OSM1250	Long type	OSS1250G1L/4	1SCA107940R1001	4	1.00
OS1200...1250/ OSM1250	Short type	OSS1250G1S/4	1SCA107941R1001	4	0.52
Terminal shrouds suitable for mechanisms with detachable integrated neutral (N3 versions)					
OS/OSM100G...250_N3_	Long type	OTS250G1L	1SCA022715R5340	1	0.03
OS/OSM100G...250_N3_	Short type	OTS250G1S	1SCA022715R5260	1	0.02
OS/OSM315...400_N3_	Long type	OSS250G1L	1SCA022727R5080	1	0.03
OS/OSM315...400_N3_	Short type	OSS250G1S	1SCA022727R4940	1	0.02
OS/OSM630...800_N3_	Long type	OTS800G1L	1SCA022776R7710	1	0.10
OS/OSM630...800_N3_	Short type	OTS800G1S	1SCA022776R8010	1	0.06
OS1200...1250/OSM1250_N3_	Long type	OTS1600G1L	1SCA106134R1001	1	0.20
OS1200...1250/OSM1250_N3_	Short type	OTS1600G1S	1SCA102667R1001	1	0.12
Single pole terminal shroud for the fourth pole side terminals (LR-types)					
IP20, snap-on mounting, grey plastic.					
OS250_LR	Short type	OSS250G1SH/1	1SCA103500R1001	1	0.003
OS400_LR	Short type	OSS400G1SH/1	1SCA103503R1001	1	0.003

Please consult us when using OS600J...OS800L with OZXA-800 lugs.

Accessories for manual and motorized switch fuses 32…1250 A

Ordering information for terminal shrouds



OSS160GG3LS



OSS400G3LS



OEZXU14

Terminal shrouds:

Three and four pole terminal shrouds for side terminals (LR types)
IP20. Snap-on mounting, grey plastic.

Suitable for switches	No. of poles	Remarks	Type	Order number	Units/ type [pcs]	Weight/ unit [kg]
OS100G...160G_LR	3	Long type	OSS160GG3LS	1SCA121570R1001	1	0.01
OS100G...160G_LR	4	Long type	OSS160GG4LS	1SCA121571R1001	1	0.01
OS200…400_	3	Short type	OSS400G3SS	1SCA100390R1001	1	0.01
OS200…400_	3	Long type	OSS400G3LS	1SCA100396R1001	1	0.01
OS200…400_	4	Left side, short	OSS400G4SSL	1SCA100392R1001	1	0.01
OS200…400_	4	Left side, long	OSS400G4LSL	1SCA100398R1001	1	0.01
OS200…400_	4	Right side, short	OSS400G4SSR	1SCA100394R1001	1	0.01
OS200…400_	4	Right side, long	OSS400G4LSR	1SCA100400R1001	1	0.01

Single pole shroud for terminal clamps
Snap-on mounting, transparent plastic, IP 2X.

Suitable for clamps	Type	Order number	Units/ type [pcs]	Weight/ unit [kg]
OZXB2, 2L	OZXB2K	1SCA022264R0010	3	0.06
OZXB3, 4	OZXB3K	1SCA022264R0440	3	0.18
OZXB5, 6	OZXB4K	1SCA022199R2850	3	0.24
OZXB7, 7L	OZXB5K	1SCA022283R8040	3	0.15

Terminal angle for side terminals (LR types)
Terminal angle extension bar for cable connections in upper or lower position. Including terminal bolts M10x30.

Suitable for switches	Type	Order number	Units/ type [pcs]	Weight/ unit [kg]
OS100G...160G_LR, 3-pole	OEZXU68/3	1SCA121380R1001	3	
OS100G...160G_LR, 4-pole	OEZXU68/4	1SCA121379R1001	4	
OS200…400_LR	OEZXU14/3	1SCA100361R1001	3	0.24
OS200…400_LR	OEZXU14/4	1SCA101082R1001	4	0.32

Accessories for manual and motorized switch fuses 32…1250 A

Ordering information for terminal clamp sets



OZXT1



OZXB8



OZXB2L



OZXB17

Terminal clamp sets

Suitable for switches	Cable cross section [mm²]	Type	Order number	Units/ type [pcs]	Weight/ unit [kg]
Insulated versions					
OS/OSM32G…63G	16…50 Al, 2.5…50 Cu	OZXT1	1SCA022469R6310	3	0.05

OZXB-type Al/Cu connectors made of stainless steel

Suitable for switches	Cable cross section [mm²]	Suitable shroud	Type	Order number	Units/ type [pcs]	Weight/ unit [kg]
OS/OSM100G...160G[1)]	10...70	OSS160G_	OZXB1L	1SCA022169R2030	3	0.15
OS/OSM100G...160G[1)]	95...185	OSS160G_	OZXB8	1SCA022744R1510	3	0.50
OS/OSM200	10...70	OSS200_L	OZXB1L	1SCA022169R2030	3	0.15
OS/OSM200	25...120	OZXB2K	OZXB2	1SCA022119R7610	3	0.34
OS/OSM200[2)]	25...120	OZXB2K	OZXB2L	1SCA022158R7750	3	0.42
OS/OSM200	95...185	OSS200_L	OZXB8	1SCA022744R1510	3	0.50
OS200	95...240	OSS200_L	OZXB9	1SCA022750R3210	3	0.50
OSM250	10...70	OSS200_L	OZXB1L	1SCA022169R2030	3	0.15
OS/OSM250[2)]	25..120	OZXB2K	OZXB2L	1SCA022158R7750	3	0.42
OS/OSM250[2)]	95...185	OZXB3K	OZXB3	1SCA022136R8100	3	1.30
OS/OSM250[2)]	2x(95...185)	OZXB3K	OZXB4	1SCA022137R4760	3	1.70
OS/OSM250[2)]	120...300	OZXB4K	OZXB5	1SCA022137R2470	3	2.30
OS/OSM250[2)]	120...240	OZXB5K	OZXB7L	1SCA022185R7130	3	1.20
OS/OSM250[2)]	95...185	OSS250_L	OZXB8	1SCA022744R1510	3	0.50
OS250[2)]	95...240	OSS250_L	OZXB9	1SCA022750R3210	3	0.50
OS200...400_LR_	95...240	OSS400G4LSL	OZXB17	1SCA022859R3230	3	0.53

[1)] Suitable for OS125G...160G_LR -types only with terminal angle OEZXU68.
[2)] Suitable for OS250_BB -types, OS200B_LR, for OS250_LR types suitable only with terminal angle OEZXU14.

Accessories for manual and motorized switch fuses 32…1250 A

Ordering information for terminal clamp sets



OZXB2L



OZXB8

Terminal clamp sets

Suitable for switches	Cable cross section [mm²]		Type	Order number	Units/ type [pcs]	Weight/ unit [kg]
OZXB-type Al/Cu connectors made of stainless steel						
OS/OSM315…400[1)]	25…120	OSS400_L	OZXB2L	1SCA022158R7750	3	0.42
OS/OSM315…400[1)]	95…185	OZXB3K	OZXB3	1SCA022136R8100	3	1.30
OS/OSM315…400[1)]	2x(95…185)	OZXB3K	OZXB4	1SCA022137R4760	3	1.70
OS315…400[1)]	120…300	OZXB4K	OZXB5	1SCA022137R2470	3	2.30
OS315…400[1)]	2x(120…300)	OZXB4K	OZXB6	1SCA022137R4920	3	3.03
OS/OSM315…400[1)]	120…240	OZXB5K	OZXB7	1SCA022185R0040	3	1.00
OS/OSM315…400[1)]	95…185	OSS400_L	OZXB8	1SCCA022744R1510	3	0.50
OS/OSM315…400[1)]	95…240	OSS400_L	OZXB9	1SCA022750R3210	3	0.50
OS/OSM630…800	95…185	OSS800_L	OZXB3	1SCA022136R8100	3	1.30
OS/OSM630…800	2x(95…185)	OSS800_L	OZXB4	1SCA022137R2470	3	1.70
OS/OSM630…800	120…300	OSS800_L	OZXB5	1SCA022137R2470	3	2.30
OS/OSM630…800	2x(120…300)	OSS800_L	OZXB6	1SCA022137R4920	3	3.03
OS/OSM630…800	120…240	OSS800_L	OZXB7L	1SCA022185R7130	3	1.20
OS/OSM630…800	95…185	OSS800_L	OZXB8	1SCA022744R1510	3	0.50
OS/OSM630…800	95…240	OSS800_L	OZXB9	1SCA022750R3210	3	0.50

[1)] Suitable for OS315…400_BB_-types, for OS315…400_LR_-types suitable only with terminal angle OEZXU14.

Accessories for manual and motorized switch fuses 32...1250 A

Ordering information for terminal clamp sets


OZXB8


OZXR95


OZXR185


OZXR240


OZXR300

Terminal clamp sets

Suitable for switches	Cable cross section [mm²]	Suitable shroud	Type	Order number	Units/ type [pcs]	Weight/ unit [kg]
OZXR type Al/Cu connectors made of stainless steel						
OS/OSM1250	95...185	OTS1600_L	OZXB3	1SCA022136R8100	3	1.30
OS/OSM1250	2x(95...185)	OTS1600_L	OZXB4	1SCA022137R4760	3	1.70
OS/OSM1250	120...300	OTS1600_L	OZXB5	1SCA022137R2470	3	2.03
OS/OSM1250	2x(120...300)	OTS1600_L	OZXB6	1SCA022137R4920	3	3.03
OS/OSM1250	210...240	OTS1600_L	OZXB7L	1SCA022185R7130	3	1.20
OS/OSM1250	95...185	OTS1600_L	OZXB8	1SCA022744R1510	3	0.50
OS/OSM1250	95...240	OTS1600_L	OZXB9	1SCA022750R3210	3	0.50
OZXR type Al/Cu connectors made of stainless steel and copper[2)]						
OS100G…160G[1)]	6…70	OSS160G_L	OZXR70	1SCA115529R1001	3	0.15
OS100G…160G[1)]	25…95	OSS160G_L	OZXR95	1SCA115530R1001	3	0.21
OS200	25…95	OSS200_L	OZXR95	1SCA115530R1001	3	0.21
OS200	95…185	OSS200_L	OZXR185	1SCA115531R1001	3	0.45
OS200	2x(95…185)	-	OZXR2X185	1SCA115534R1001	3	0.66
OS250	95…185	OSS250_L	OZXR185	1SCA115531R1001	3	0.45
OS250	2x(95…185)	-	OZXR2X185	1SCA115534R1001	3	0.66
OS315…400	95…240	OSS400_L	OZXR240	1SCA115532R1001	3	0.42
OS315…400	2x(95…185)	-	OZXR2X185	1SCA115534R1001	3	0.66
OS315…400	185…300	-	OZXR300	1SCA115533R1001	3	0.87
OS630…800	2x(185…300)	OSS800_L	OZXR2X300	1SCA115535R1001	3	1.59
OZXP type Al/Cu connectors made of tin plated aluminium profile[2)]						
OS100G...160G[1)]	6...95	OSS160G_L	OZXP95	1SCA115539R1001	3	0.09
OS200	6...95	OSS200_L	OZXP95	1SCA115539R1001	3	0.09
OS200	16...120	OSS200_L	OZXP120	1SCA115540R1001	3	0.15
OS200	25...150	-	OZXP150	1SCA115541R1001	3	0.18
OS200	35...240	-	OZXP240	1SCA115542R1001	3	0.27
OS250	35...240	-	OZXP240	1SCA115542R1001	3	0.27
OS315...400	35...240	-	OZXP240	1SCA115542R1001	3	0.27
OS315...400	95...300	-	OZXP300	1SCA115543R1001	3	0.42
OS315...400	2x(70...240)	-	OZXP2X240	1SCA115544R101	3	1.38
OS630...800	2x(70...240)	OSS800_L	OZXP2X240	1SCA115544R1001	3	1.38

[1)] For _LR-types, suitable only with terminal angle OEZXU68.
[2)] Suitable also for OS200...400_BB_, for OS200...400_LR_-types suitable only with terminal angle OEZXU14.

Accessories for manual operated switch fuses 32...1250 A

Ordering information for terminal lugs



OZXA-200



OZXA-400



OZXA-800



OZXA-1200

Terminal lug kits fro Al- and Cu-cables for UL/CSA disconnect switches

One kit includes 6 pcs.

Suitable for switches	Cable size	Type	Tightening torque [lb.in/Nm]	Weight/ unit [kg]	Weight/ unit [lb]
OS100	AWG 14-2/0	OZXA-24	120/13.6	0.21	0.45
OS200	AWG 4-300 MCM	OZXA-200	275/31.1	0.04	0.09
OS400	AWG 2-600 MCM	OZXA-400	375/42.4	0.05	0.12
OS600...800	2 X AWG 2-600 MCM	OZXA-800	500/56.5	0.21	0.45
OS1200	4 X AWG 2-600 MCM	OZXA-1200	500/56.5	0.45	0.98

For ordering please consult us.

Technical data for terminal lugs

Description	
UL approval file	E6207
Temperature rating, ºC	75
Wire tightening Type of tool	Allen (Hex) wrench
Lug mounting	Bolt & nut mounting
AWG (American Wire Gauge) wire class	B.C

Accessories for manual operated switch fuses 32...1250 A

Ordering information for conversion kits



OESAZW2

Conversion kits for front operated combination switches

Suitable for switches	Switches needed [pcs]	Shaft distance [mm]	Type	Order number	Units/ type [pcs]	Weight/ unit [kg]



OTZW25

6 and 8-pole switch mechanism

Parallel attachment for connecting 3- and 4-pole switches. The switches work simultaneously.

6 and 8-pole switches, OS32G...400						
The attachment levers are provided with holes, enabling different shaft distances. The combination switches can be mounted either horizontally or vertically.						
OS32G...250	Two 3- or 4-pole	45...240mm, step distance 15mm	OESAZW2	1SCA022078R1600	1	0.37
OS315...400	Two 3- or 4-pole	60...440mm, step distance 20mm	OETLZW9	1SCA022061R3300	1	1.1



OTZW26

Change-over switch mechanism

Two switches connected with a mechanism operating into I-O-II positions.

OS32G...250	Two 3- or 4-pole	210...570mm, step distance 20mm	OTZW25	1SCA022778R6920	1	2.8
OS315...400	Two 3- or 4-pole	210...430mm, step distance 20mm	OETLZW11	1SCA022078R0030	1	3.0
OS315...400	Two 3- or 4-pole	210...610mm, step distance 20mm	OETLZW12	1SCA022078R0200	1	4.6



OETLZW14

Bypass switch mechanism

A combination of two switches in parallel with a third switch for change-over operation to bypass, for example, a breaker for maintenance. The bypass attachment can be used together with another combination attachment.

OS32G...250	Three 3- or 4-pole		OTZW26	1SCA022778R7060	1	3.3
	Between 1 and 2:	210...390mm, step distance 20mm				
	Between 1 and 3:	250...430mm, step distance 20mm				
OS315...800	Three 3- or 4-pole		OETLZW13	1SCA022078R0460	1	4.0
	Between 1 and 2:	210...570mm, step distance 20mm				
	Between 1 and 3:	250...610mm, step distance 20mm				

Mechanical interlock mechanism

Prevents one switch from closing to ON -position, if the other is not in OFF - position.
OTZW/OETLZW-types: When mounted upside down, prevents one switch from opening to OFF-position, if the other is not in the ON-position. (UPS-usage, make-before-break)

OS32G...250	Two 3- or 4-pole	190	OTZW10	1SCA022431R5280	1	0.40
OS315...800	Two 3- or 4-pole	250	OETLZW14	1SCA022077R3410	1	0.70
OS315...800	Two 3- or 4-pole	300	OETLZW3	1SCA022049R0380	1	0.80
OS315...1250	Two 3- or 4-pole	500	OETLZW15	1SCA022081R9340	1	1.24

Accessories for manual operated switch fuses 32...1250 A

Ordering information for conversion kits

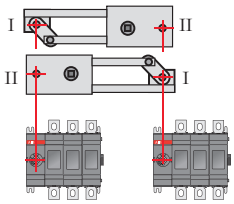

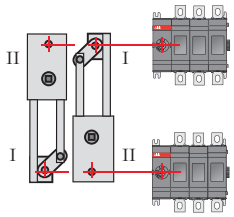

Change-over switches

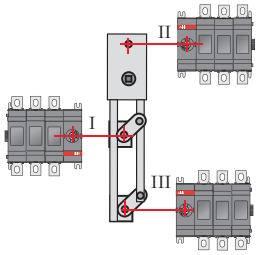

Change-over and bypass switches

Shafts and handles for conversion kits

Conversion kit type	Shaft	To be ordered separately		Included in the conversion kit delivery		The standard handle or shaft of one of the combined switches can be used	
		Handle	Shaft	Handle		Shaft	Handle
6 and 8-pole switches							
OESAZW2	-	-	x (2 pcs)	OHB145J12		-	-
OETLZW9	-	-	-	-		x	x
Change-over switches							
OTZW25	-	-	x (2 pcs)	OHB95J12E011		-	-
OETLZW11	-	-	x (2 pcs)	OHB145J12E011		-	-
OETLZW12	-	-	x (2 pcs)	YASDA21		-	-
Bypass switches							
OTZW26	-	-	x (3 pcs)	OHB95J12E011		-	-
OETLZW13	-	-	x (3 pcs)	YASDA 6		-	-
Mechanical interlock							
OTZW10	-	-	-	-		x	x
OETLZW14	-	-	-	-		x	x
OETLZW3	-	-	-	-		x	x
OETLZW15	-	-	-	-		x	x

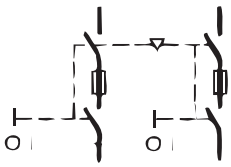

Mechanical interlock

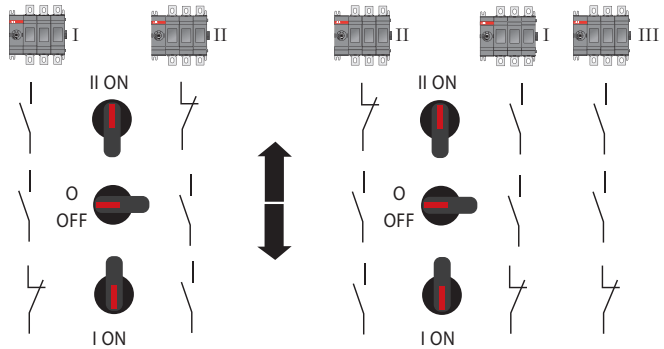

Change-over switches **Bypass switches**

Accessories for manual operated switch fuses 32...1250 A

Ordering information for cam attachment and interlocks



OSZT1A



OSZT2A

Mechanism interlock kits and Electrical interlocks

OS32G...1250 switch fuses can be interlocked in the OFF position using padlocks and by using a mechanical interlock kit mounted on the mechanism. The diameter of the lock bail can be max 8 mm.

Note: The shaft must go through the interlock into the switch mechanism.

Suitable for switches	Type	Order number	Weight/ unit [kg]
Interlocking in the OFF position			
OS32G...160G	OTZT1A	1SCA106522R1001	0.21
OS200 ... 250_	OSZT1A	1SCA106532R1001	0.32
OS315 ... 400_	OSZT2A	1SCA106534R1001	0.75
OS600 ...800_	OSZT3A	1SCA106535R1001	1.20
OS1200 ... 1250_	OSZT4A	1SCA106536R1001	2.00
Interlocking in the OFF & ON positions			
OS32G...160G	OTZT1L	1SCA106527R1001	0.21
OS200 ... 250_	OSZT1L	1SCA106538R1001	0.32
OS315 ... 400_	OSZT2L	1SCA106539R1001	0.75
OS600 ...800_	OSZT3L	1SCA106540R1001	1.20
OS1200 ... 1250_	OSZT4L	1SCA106541R1001	2.00



OETLZW16

Cam attachment

Cam attachment for Castell, Lowe & Fletcher and Ronis interlock. Lock, handle or shaft are not included. Mounting on OXP shaft working together with external OH door handle.

Suitable for switches	Type	Order code	Weight/ unit [kg]
OS20...250	OETLZW16	1SCA022093R2070	
OS315...1250	OETLZW5	1SCA022052R3900	0.14



OETLZW5



OHZX4

Door interlock bracket for pistol handles

Prevents defeating the door interlock.

Suitable for switches	Type	Order code	Weight/ unit kg
For pistol handles OH_45...275	OHZX4	1SCA022467R2470	0.03

Accessories for manual operated switch fuses 32...1250 A

Ordering information for coils and mounting accessories



PDAL2-230AC50Hz



OSGZD1

Coils

By installing a coil inside the housing of the interlock kit the switch can be interlocked electrically in the OFF position or both in the OFF and ON positions. The electrical interlock works using the “closed circuit principle”, meaning that when the control voltage is not connected to the coil, the switches provided with A-type interlocks cannot be turned to the ON position and switches with L-type interlocks cannot be turned to the ON or OFF positions.

Suitable for switches	Type	Order number	Weight/ unit [kg]
AC coils			
24 VAC, 60 Hz	PDAL2/24AC60Hz	1SCA111350R1001	0.15
110 VAC, 50Hz	PDAL2/110AC50Hz	1SCA106543R1001	0.15
110 VAC, 60Hz	PDAL2/110AC60Hz	1SCA107100R1001	0.15
120 VAC, 60 Hz	PDAL2/120AC60Hz	1SCA111353R1001	0.15
208 VAC, 60Hz	PDAL2/208AC60Hz	1SCA107101R1001	0.15
230 VAC, 50Hz	PDAL2/230AC50Hz	1SCA107102R1001	0.15
240 VAC, 60 Hz	PDAL2/240AC60Hz	1SCA111356R1001	0.15
DC coils			
24 VDC	PDAL2/24DC	1SCA106542R1001	0.15
48 VDC	PDAL2/48DC	1SCA107103R1001	0.15
60 VDC	PDAL2/60DC	1SCA107104R1001	0.15
110 VDC	PDAL2/110DC	1SCA107105R1001	0.15
125 VDC	PDAL2/125DC	1SCA111338R1001	0.15
220 VDC	PDAL2/220DC	1SCA112503R1001	0.15

Technical data for the coil			
Operating voltage		U=0.8...1.1 x Un	
Operating ambient temperature		-40ºC.. 65ºC	
Power consumption	with AC	6.5 W	
	with DC	9 VA	

Mounting accessories: DIN-rail mounting kit

For mounting a switch fuse into 35 mm DIN-rail

Suitable for switches	Type	Order number	Weight/ unit [kg]
OS32G...160G, 1 - 4 -pole	OSGZD1	1SCA115688R1001	0.20

Accessories for manual operated switch fuses 32...1250 A

Ordering information for spare part kits

Spare part kits

Suitable for switches	Type	Order number	Units/ type [pcs]	Weight/ unit [kg]
Fuse cover, window and label set				
OS32GB-OS63GB/ OS32GD-OS63GD/OS50GF	OSFC1/B10	1SCA149864R1001	10	0,100
OS60GJ	OSFC2/B10	1SCA149872R1001	10	0,110
OS125GD-OS160GD/OS125GF	OSFC3/B10	1SCA149873R1001	10	0,200
OS100GB-OS200GB	OSFC4/B10	1SCA149874R1001	10	0,180
OS100GJ	OSFC5/B10	1SCA149875R1001	10	0,180
OS200D/OS200B	OSFC6/B10	1SCA149876R1001	10	0,300
OS200J	OSFC7/B10	1SCA149877R1001	10	0,330
OS250D/OS250B	OSFC8/B10	1SCA149878R1001	10	0,400
OS400D	OSFC9/B4	1SCA149879R1001	4	0,200
OS315B-OS400B/OS400J	OSFC10/B4	1SCA149865R1001	4	0,220
OS630D-OS800D/OS630B-OS800B/OS600J-OS800L	OSFC11	1SCA149866R1001	1	0,100
OS1250D/OS1250BOS1200L	OSFC12	1SCA149867R1001	1	0,330
Fuse cover and window				
OS40FD	OSFC13	1SCA149868R1001	1	0,180
Fuse cover				
OS20FB/OS32FB	OSFC14	1SCA149869R1001	1	0,858
OS25FF/OS32FF	OSFC15	1SCA149870R1001	1	0,077
OS30FACC/OS30FAJ	OSFC16	1SCA149871R1001	1	0,073
Mechanism cover and label set				
OS50GF/OS60GJ-OS100GJ/OS32GB-OS160GB/OS32GD-OS160GD	OSMC1/B4	1SCA149880R1001	4	0,040
OS200D-250D/OS200B-OS250B/OS200J	OSMC2/B4	1SCA149881R1001	4	0,045
OS315B-OS400B/OS400D/OS400J	OSMC3	1SCA149882R1001	1	0,020
OS630B-OS800B/OS630D-OS800D/OS600J-OS800J	OSMC4	1SCA149883R1001	1	0,050
OS1250D/OS1250B/OS1200L	OSMC5	1SCA149884R1001	1	0,070
Shaft locking ring and screw				
OS32GD-OS250D/OS32GB-OS250B/OS50GF-OS125GF/ OS60GJ-OS200J	OTZS2/B10	1SCA126043R1001	10	0,001
Lock spring and screw				
OS400D-OS1250D/OS315B-OS1250B/OS400J-OS1200L	OZX1	1SCA105708R1001	10	0,090


ABB

Switch fuses
Dimensional drawings

Front operated switch fuses IEC and UL/CSA	119
Side operated switch fuses IEC and UL/CSA	148
Special connected switch fuses	156
Motorized switch fuses	171
Accessories for switch fuses 20…1250 A	178

Front operated switch fuses, IEC and UL/CSA

Dimensional drawings

OS Mini

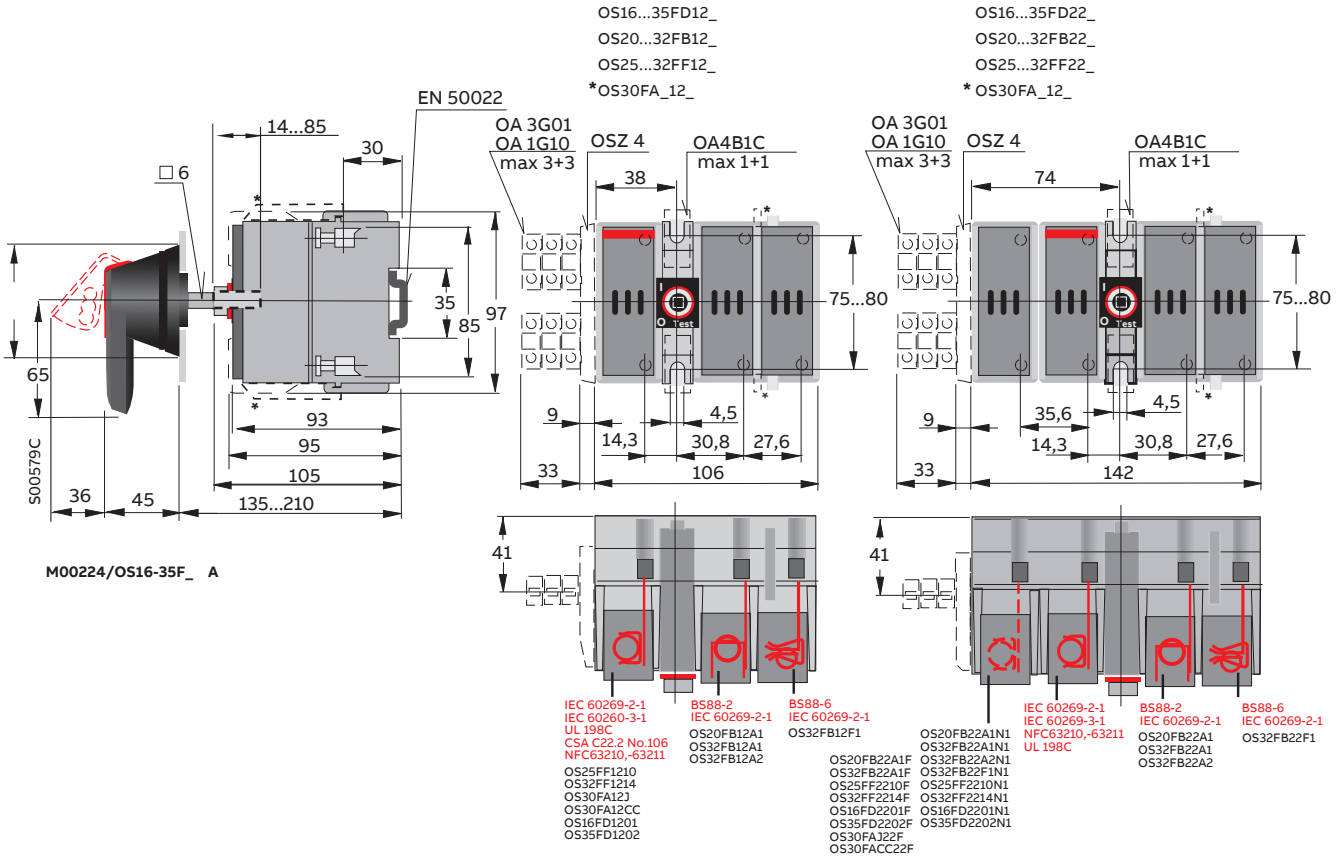

Front operated switch fuses, IEC and UL/CSA

Dimensional drawings

OS40 Mini (IEC Only)

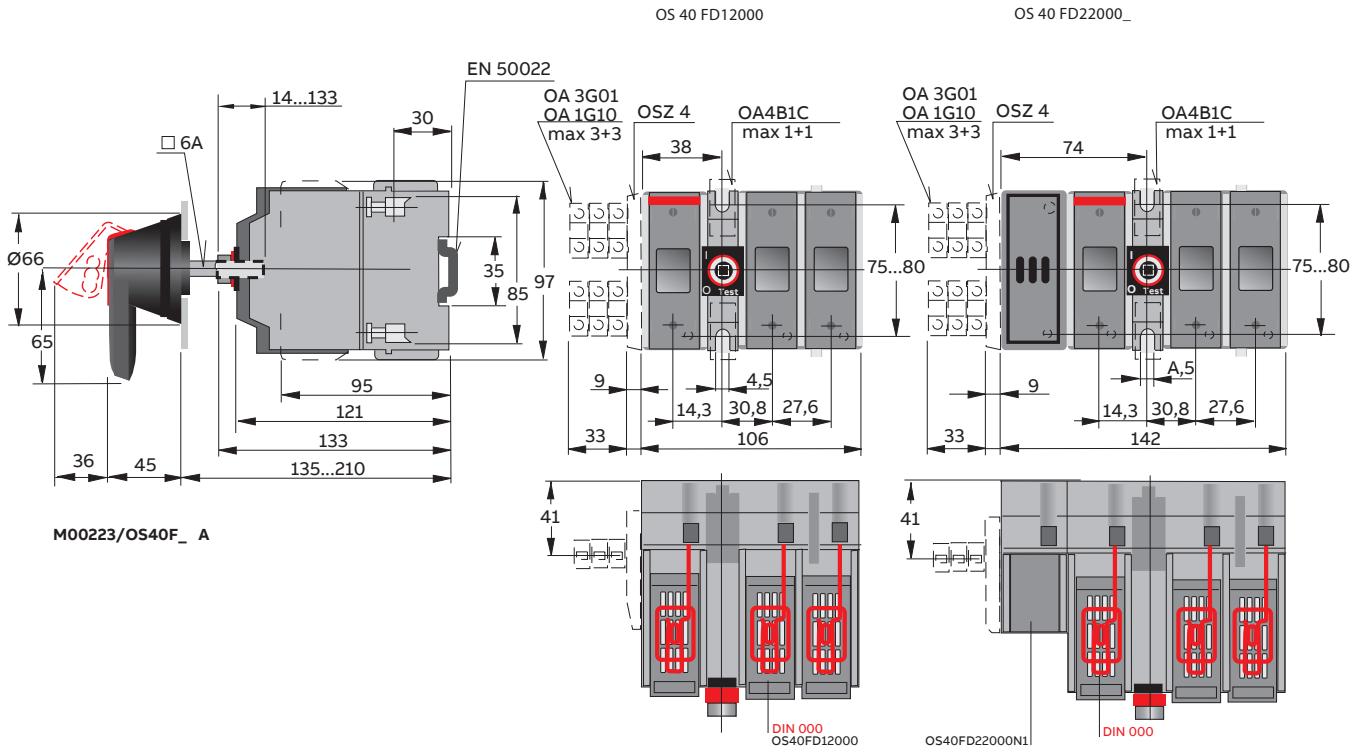

Front operated switch fuses, IEC

Dimensional drawings

OS32...63G_P

Mechanism at the end of the switch fuse

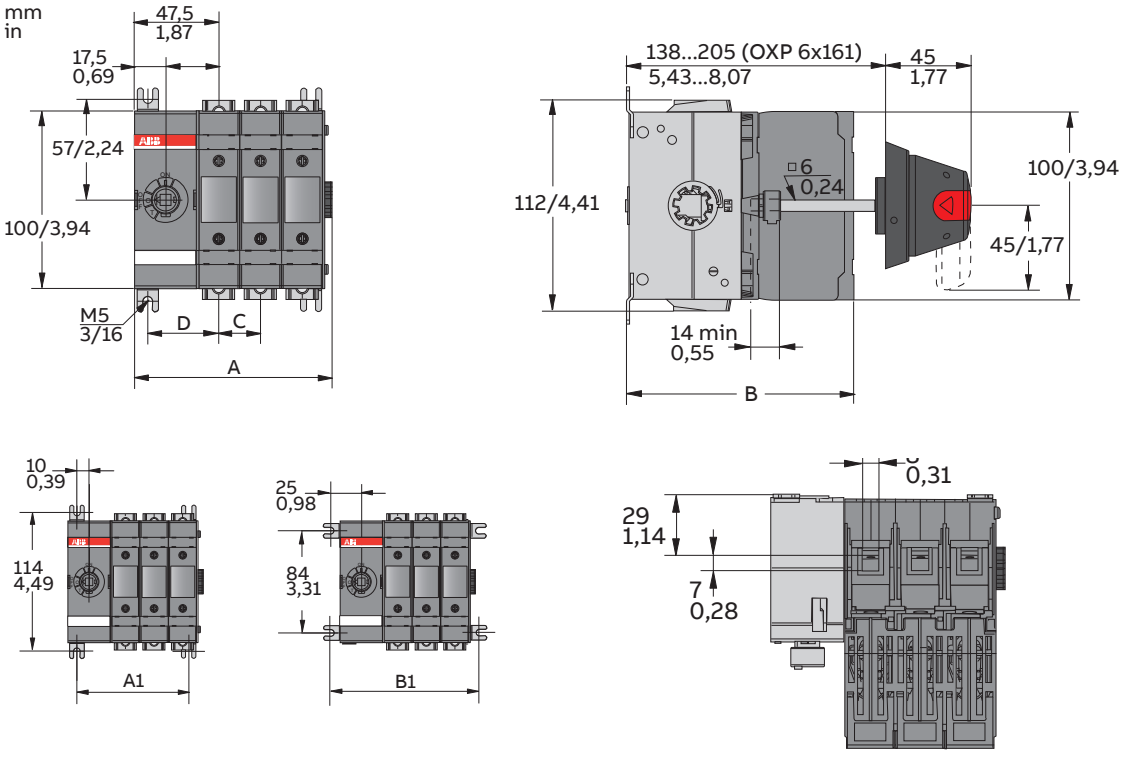

OS32-63GD				
[mm]	**D01**	**D02**	**D03**	**D04**
A	64,5	88	111,5	135,5
B	120,5	120,5	120,5	120,5
C	-	23,5	23,5	23,5
D	40	40	40	40
E	30	30	30	30
A1	45	68,5	92	111,5
B1	75	98,5	122	145,5

M00287/OS32-63G_01-04 B

OS32-63GB/F				
[mm]	**B/F01**	**B/F02**	**B/F03**	**B/F04**
A	64,5	88	111,5	135,5
B	108,5	108,5	108,5	108,5
C	-	23,5	23,5	23,5
D	40	40	40	40
E	30	30	30	30
A1	45	68,5	92	111,5
B1	75	98,5	122	145,5

Front operated switch fuses, IEC

Dimensional drawings

OS32...63G_P

Mechanism between the poles

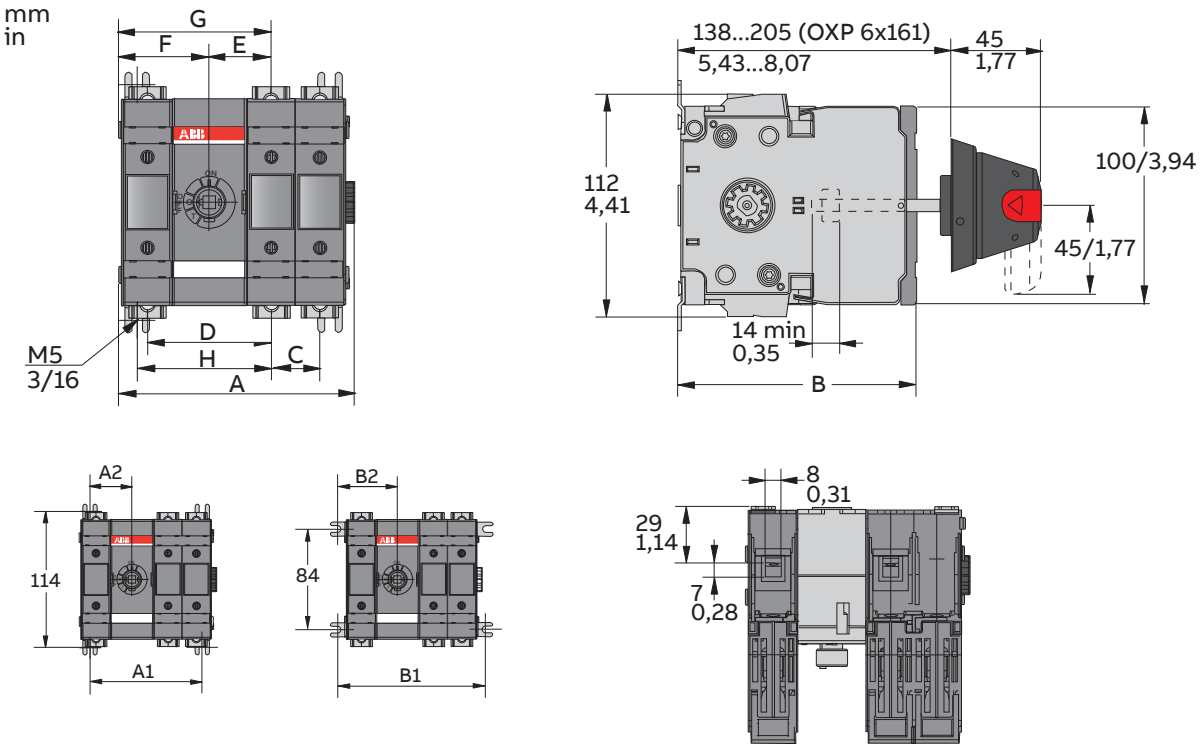

OS32-63GD				
[mm]	**D11**	**D12**	**D13**	**D22**
A	91	114,5	138	138
B	120,5	120,5	120,5	120,5
C	-	23,5	23,5	23,5
D	60	60	60	60
E	30	30	30	30
F	44	44	44	67,5
G	74	74	74	97,5
A1	70	93,5	117	117
A2	35	35	35	58,5
B1	100	123,5	147	147
B2	50	50	50	73,5

OS32-63GB/F				
[mm]	**B/F11**	**B/F12**	**B/F13**	**B/F22**
A	91	114,5	138	138
B	108,5	108,5	108,5	108,5
C	-	23,5	23,5	23,5
D	60	60	60	60
E	30	30	30	30
F	44	44	44	67,5
G	74	74	74	97,5
A1	70	93,5	117	117
A2	35	35	35	58,5
B1	100	123,5	147	147
B2	50	50	50	73,5

M00288/OS32-63G_11-22 B

Front operated switch fuses, IEC
Dimensional drawings

OS32G_K...OS63G_K
Direct mounted handle

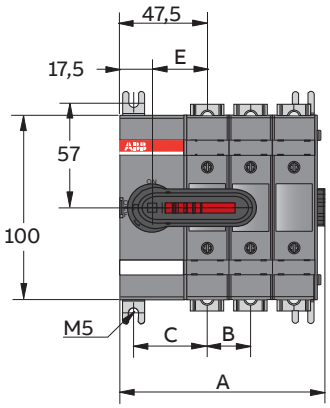

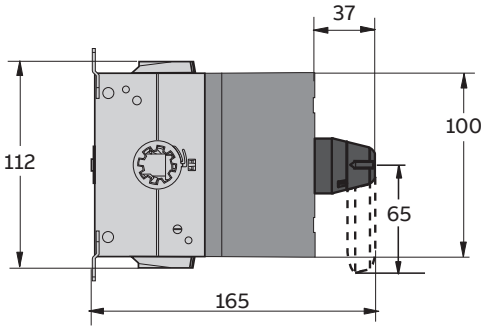

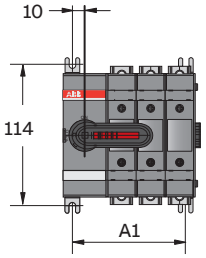

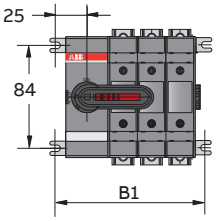

OS32-63G_K				
[mm]	**D01**	**D02**	**D03**	**D04**
A	64,5	88	111,5	135,5
B	40	40	40	40
C	-	23,5	23,5	23,5
E	30	30	30	30
A1	45	68,5	92	111,5
B1	75	98,5	122	145,5

M00389/OS32-63G_01-04K A

OS32-63G_K				
[mm]	**B/F01**	**B/F02**	**B/F03**	**B/F04**
A	64,5	88	111,5	135,5
B	40	40	40	40
C	-	23,5	23,5	23,5
E	30	30	30	30
A1	45	68,5	92	111,5
B1	75	98,5	122	145,5

Front operated switch fuses, IEC

Dimensional drawings

OS100...160G_P
Mechanism at the end of the switch fuse

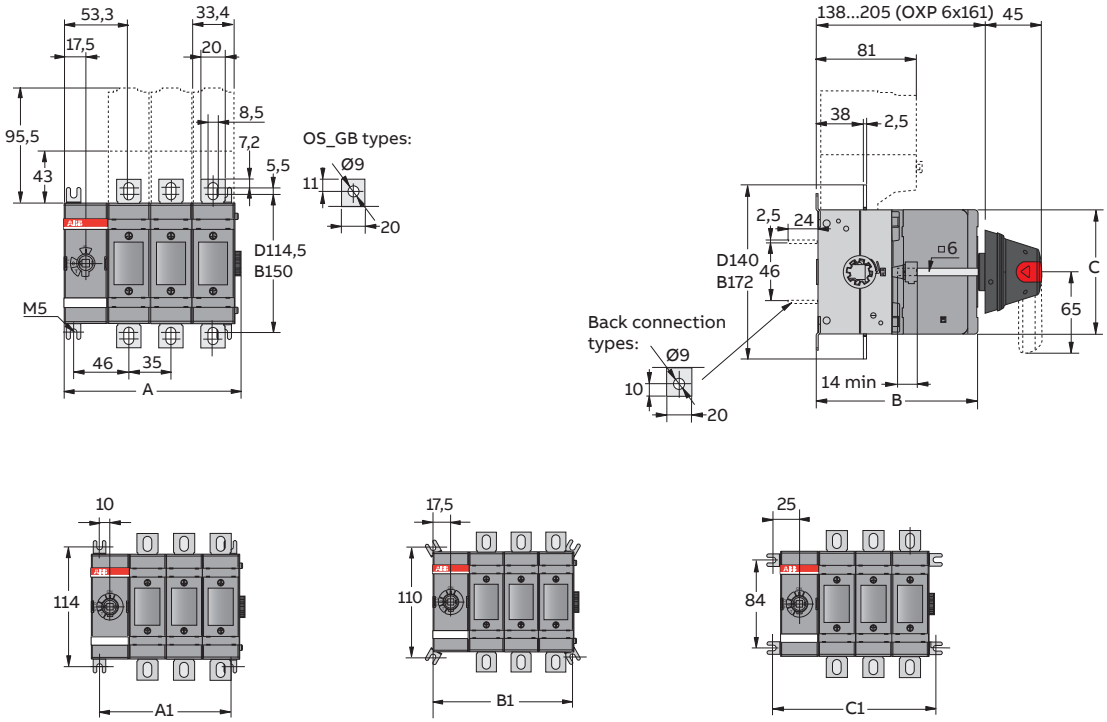

OS100-160G_				
[mm]	**D/F01**	**D/F02**	**D/F03**	**D/F04**
A	76,5	111,5	146,5	181,5
B	130	130	130	114,5
C	100	100	100	100
A1	55	90	125	160
B1	70	105	140	175
C1	85	120	155	190

M00289/OS100-160G_01-04 C

OS100-200G_				
[mm]	**B01**	**B02**	**B03**	**B04**
A	76,5	111,5	146,5	181,5
B	114,5	114,5	114,5	114,5
C	118	118	118	118
E	55	90	125	160
A1	70	105	140	175
B1	85	120	155	190

Front operated switch fuses, IEC

Dimensional drawings

OS100...160G_P

Mechanism between the poles

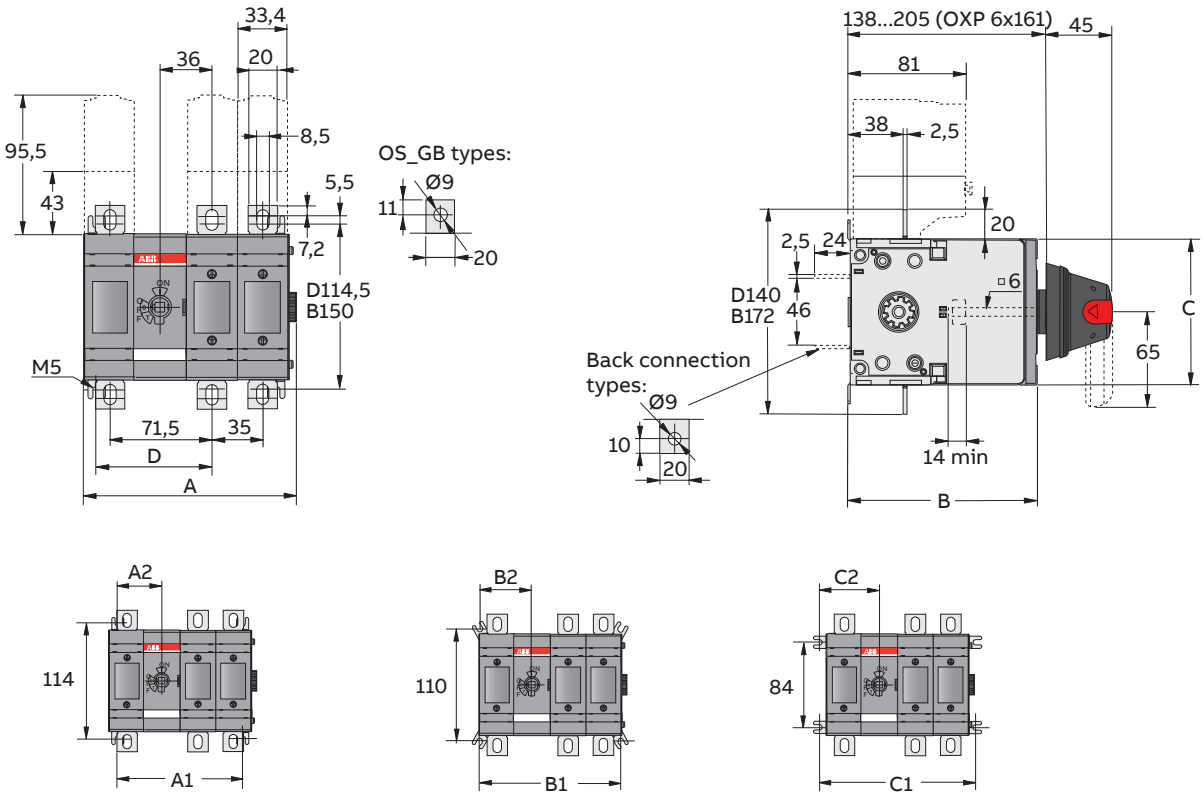

OS100-160G_				
[mm]	**D/F11**	**D/F12**	**D/F13**	**D/F22**
A	113	148	183	183
B	130	130	130	130
C	100	100	100	100
D	81	81	81	116
A1	90	125	160	160
A2	45	45	45	80
B1	105	140	175	175
B2	52,5	52,5	52,5	87,5
C1	120	155	190	190
C2	60	60	60	95

M00290/OS100-160G_11-22 B

OS100-200GB_				
[mm]	**B11**	**B12**	**B13**	**B22**
A	113	148	183	183
B	114,5	114,5	114,5	114,5
C	118	118	118	118
D	81	81	81	116
A1	90	125	160	160
A2	45	45	45	80
B1	105	140	175	175
B2	52,5	52,5	52,5	87,5
C1	120	155	190	190
C2	60	60	60	95

M00290/OS100-160G_11-22 B

Front operated switch fuses, IEC

Dimensional drawings

OS100G_K...OS160G_K
Direct mounted handle

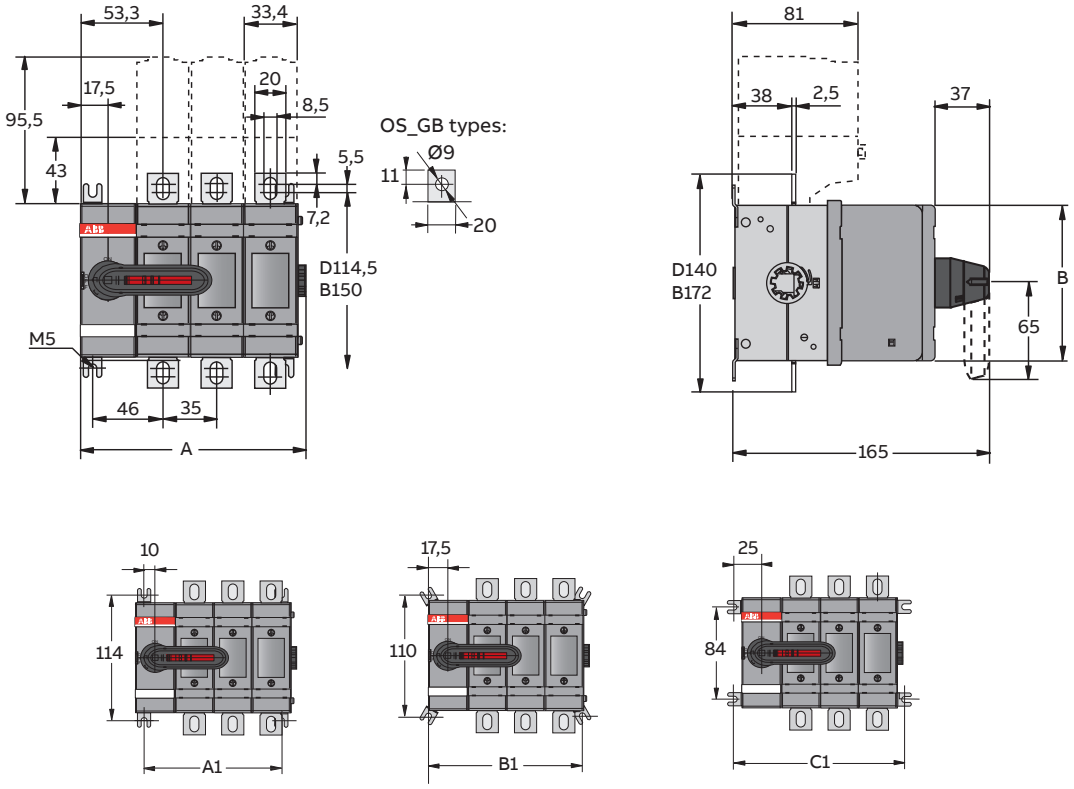

OS100-160G_K				
[mm]	**D/F01**	**D/F02**	**D/F03**	**D/F04**
A	76,5	111,5	146,5	181,5
B	100	100	100	100
A1	55	90	125	160
B1	70	105	140	175
C1	85	120	155	190

M00390/OS100-160G_01-04K A

OS100-200G_K				
[mm]	**B01**	**B02**	**B03**	**B04**
A	76,5	111,5	146,5	181,5
B	118	118	118	118
A1	55	90	125	160
B1	70	105	140	175
C1	85	120	155	190

Front operated switch fuses, IEC

Dimensional drawings

OS200_P and OS250_P

Mechanism at the end of the switch fuse

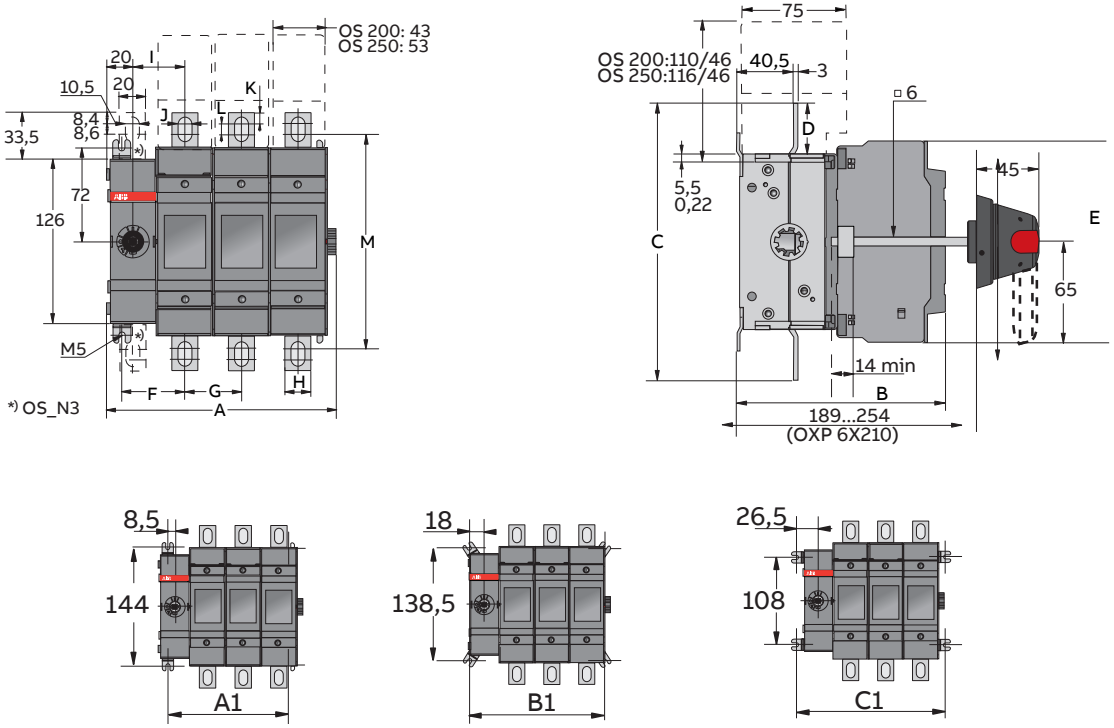

OS200								
[mm]	**D01**	**B01**	**D02**	**B02**	**D03**	**B03**	**D04**	**B04**
A	89,5	89,5	133	133	176,5	176,5	220	220
B	149	130	149	130	149	130	149	130
C	198,5	198,5	198,5	198,5	198,5	198,5	198,5	198,5
D	36,5	36,5	36,5	36,5	36,5	36,5	36,5	36,5
E	144,5	144,5	144,5	144,5	144,5	144,5	144,5	144,5
F	48,5	48,5	48,5	48,5	48,5	48,5	48,5	48,5
G	-	-	43,5	43,5	43,5	43,5	43,5	43,5
H	20	20	20	20	20	20	20	20
I	40	40	40	40	40	40	40	40
J	10	10	10	10	10	10	10	10
K	8,4	8,4	8,4	8,4	8,4	8,4	8,4	8,4
L	8,6	8,6	8,6	8,6	8,6	8,6	8,6	8,6
M	164,5	164,5	164,5	164,5	164,5	164,5	164,5	164,5
A1	60,5	60,5	104	104	147,5	147,5	191	191
B1	79,5	79,5	123	123	166,5	166,5	210	210
C1	96,5	96,5	140	140	183,5	183,5	227	227

M00008/OS200 250 01 04 H

OS250				
[mm]	**D01/ B01**	**D02/ B02**	**D03/ B03**	**D04/ B04**
A	99,5	153,5	207,5	261,5
B	154	154	154	154
C	193	193	193	193
D	33,5	33,5	33,5	33,5
E	148,5	148,5	148,5	148,5
F	53,5	53,5	53,5	53,5
G	-	54	54	54
H	25	25	25	25
I	45	45	45	45
J	11	11	11	11
K	11,5	11,5	11,5	11,5
L	4	4	4	4
M	162	162	162	162
A1	70,5	124,5	178,5	232,5
B1	89,5	143,5	197,5	251,5
C1	106,5	160,5	214,5	268,5

Front operated switch fuses, IEC

Dimensional drawings

OS200_P and OS250_P

Mechanism between the poles

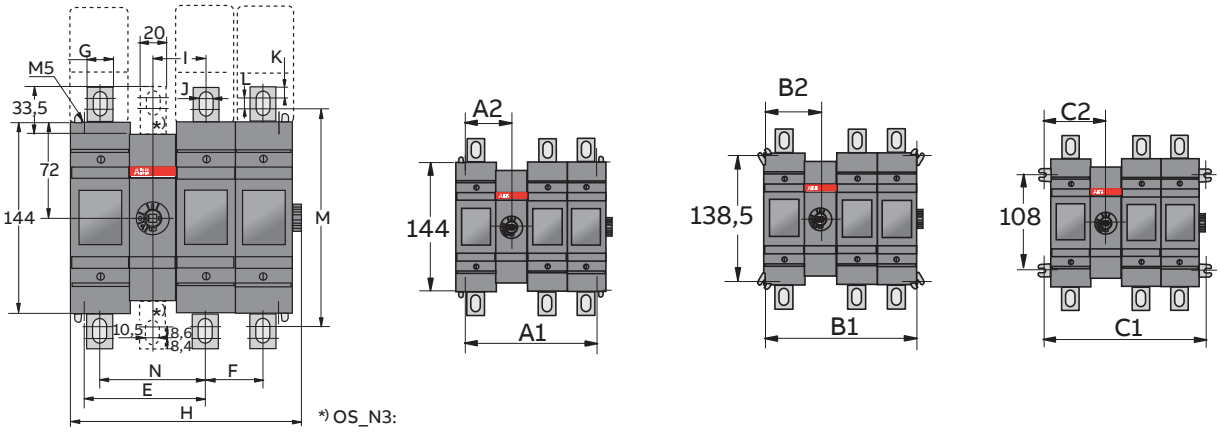

OS200								
[mm]	D11	B11	D12	B12	D13	B13	D22	B22
A	149	130	149	130	149	130	149	130
B	199	199	199	199	199	199	199	199
C	36,5	36,5	36,5	36,5	36,5	36,5	36,5	36,5
D	144,5	144,5	144,5	144,5	144,5	144,5	144,5	144,5
E	92	92	92	92	92	92	135,5	135,5
F	43,5	43,5	43,5	43,5	43,5	43,5	43,5	43,5
G	20	20	20	20	20	20	20	20
H	132	132	175,5	175,5	219	219	219	219
I	40	40	40	40	40	40	40	40
J	10	10	10	10	10	10	10	10
K	8,4	8,4	8,4	8,4	8,4	8,4	8,4	8,4
L	8,6	8,6	8,6	8,6	8,6	8,6	8,6	8,6
M	165	165	165	165	165	165	165	165
N	80	80	80	80	80	80	80	80
A1	104	104	147,5	147,5	191	191	191	191
A2	52	52	52	52	52	5	95,5	95,5
B1	123	123	166,5	166,5	210	210	210	210
B2	61,5	61,5	61,5	61,5	61,5	61,5	105	105
C1	140	140	183,5	183,5	227	227	227	227
C2	70	70	70	70	70	70	113,5	113,5

OS250				
[mm]	D11	D12	D13	D22
A	154	154	154	154
B	193	193	193	193
C	33,5	33,5	33,5	33,5
D	148,5	148,5	148,5	148,5
E	112,5	112,5	112,5	112,5
F	54	54	54	54
25	25	25	25	25
H	152	152	152	152
I	45	45	45	45
J	11	11	11	11
K	11,5	11,5	11,5	11,5
L	4	4	4	4
M	162	162	162	162
N	90	90	90	90
A1	124	178	232	232
A2	62	62	62	116
B1	143	197	251	251
B2	71,5	71,5	71,5	125,5
C1	160	214	268	268
C2	80	80	80	134

M00014/OS200_250_11_22 K

Front operated switch fuses, IEC

Dimensional drawings

OS200_K and OS250_K

Direct mounted handle

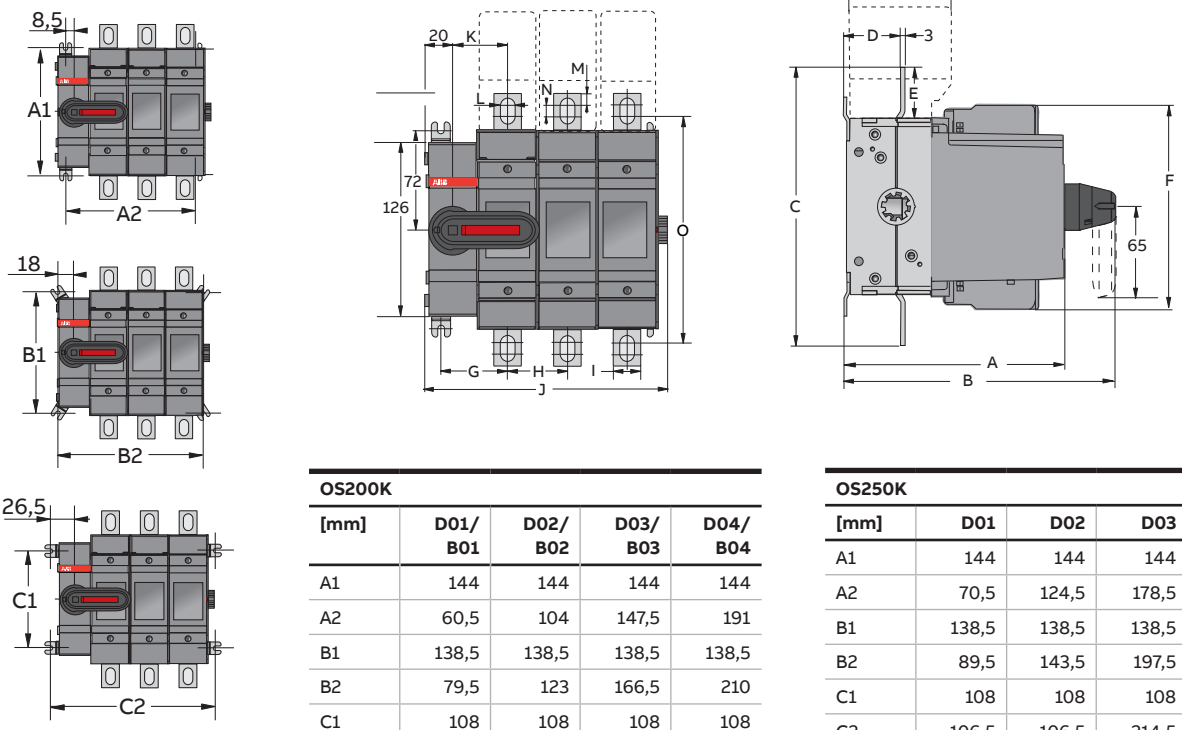

OS200K				
[mm]	D01/ B01	D02/ B02	D03/ B03	D04/ B04
A1	144	144	144	144
A2	60,5	104	147,5	191
B1	138,5	138,5	138,5	138,5
B2	79,5	123	166,5	210
C1	108	108	108	108
C2	96,5	140	183,5	227

OS250K				
[mm]	D01	D02	D03	D04
A1	144	144	144	144
A2	70,5	124,5	178,5	232,5
B1	138,5	138,5	138,5	138,5
B2	89,5	143,5	197,5	251,5
C1	108	108	108	108
C2	106,5	106,5	214,5	268,5

OS200_K								
[mm]	D01	B01	D02	B02	D03	B03	D04	B04
A	154	130	154	130	154	130	154	130
B	191	167	191	167	191	167	191	167
C	198,5	198,5	198,5	198,5	198,5	198,5	198,5	198,5
D	40,5	40,5	40,5	40,5	40,5	40,5	40,5	40,5
E	36,5	36,5	36,5	36,5	36,5	36,5	36,5	36,5
F	144,5	144,5	144,5	144,5	144,5	144,5	144,5	144,5
G	48,5	48,5	48,5	48,5	48,5	48,5	48,5	48,5
H	-	-	43,5	43,5	43,5	43,5	43,5	43,5
I	20	20	20	20	20	20	20	20
J	89,5	89,5	133	133	176,5	176,5	220	220
K	40	40	40	40	40	40	40	40
L	10	10	10	10	10	10	10	10
M	8,5	8,5	8,5	8,5	8,5	8,5	8,5	8,5
N	8,5	8,5	8,5	8,5	8,5	8,5	8,5	8,5
O	164,5	164,5	164,5	164,5	164,5	164,5	164,5	164,5

M00080/OS 200_250_01_04K C

OS250_K				
[mm]	D01/ B01	D02/ B02	D03/ B03	D04/ B04
A	154	154	154	154
B	191	191	191	191
C	193	193	193	193
D	40,5	40,5	40,5	40,5
E	33,5	33,5	33,5	33,5
F	148,5	148,5	148,5	148,5
G	53,5	53,5	53,5	53,5
H	-	54	54	54
I	25	25	25	25
J	99,5	153,5	207,5	261,5
K	45	45	45	45
L	11	11	11	11
M	11,5	11,5	11,5	11,5
N	4	4	4	4
O	162	162	162	162

Front operated switch fuses, IEC

Dimensional drawings

OS315_P and OS400_P

Mechanism at the end of the switch fuse

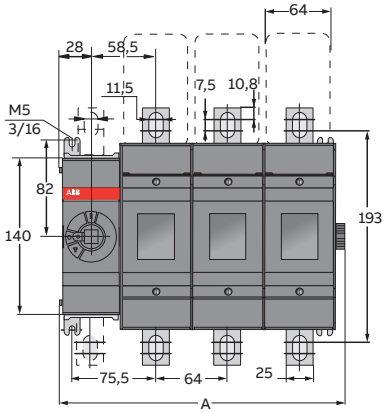

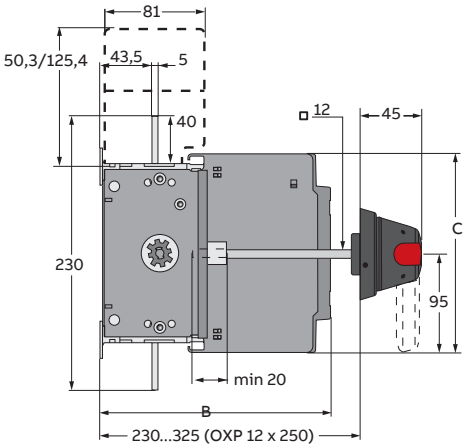

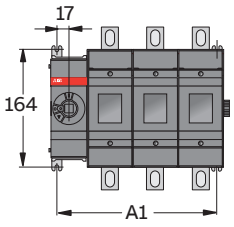

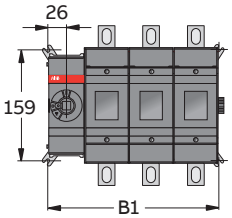

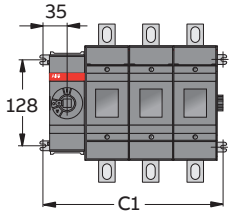

OS315				
[mm]	**B01**	**B02**	**B03**	**B04**
A	127	191	255	319
B	176	176	176	176
C	194	194	194	194

OS400								
[mm]	**B01**	**B02**	**B03**	**B04**	**D01**	**D02**	**D03**	**D04**
A	127	191	255	319	127	191	255	319
B	176	176	176	176	193	193	193	193
C	194	194	194	194	166	166	166	166

OS315				
[mm]	**B01**	**B02**	**B03**	**B04**
A1	98,5	162,5	226,5	290,5
B1	116,5	180,5	244,5	308,5
C1	134,5	198,5	262,5	326,5

C000014 /OS315_400_001_04 A

OS400				
[mm]	**B01/ D01**	**B02/ D02**	**B03/ D03**	**B04/ D04**
A1	98,5	162,5	226,5	290,5
B1	116,5	180,5	244,5	308,5
C1	134,5	198,5	262,5	326,5

Front operated switch fuses, IEC

Dimensional drawings

OS315_P and OS400_P

Mechanism between the poles

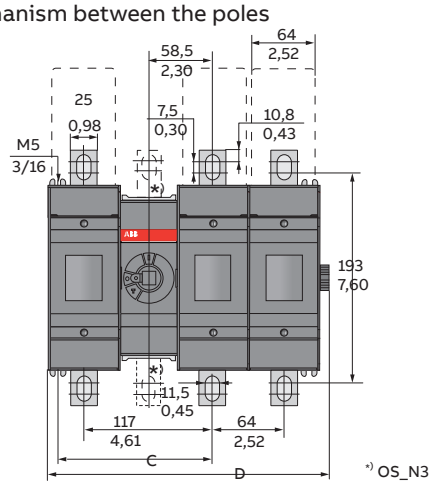

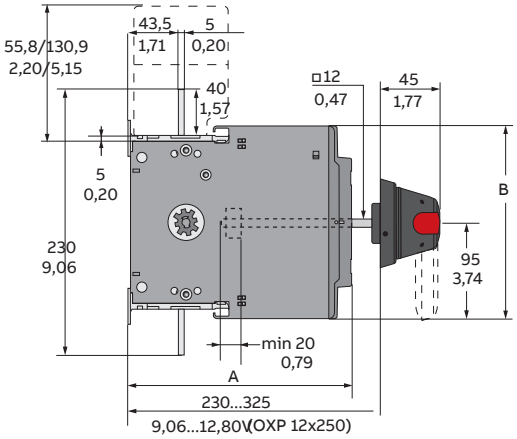

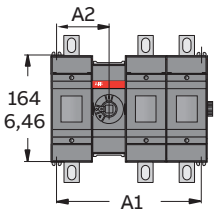

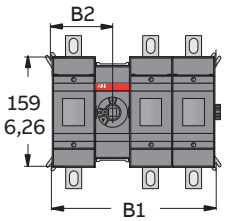

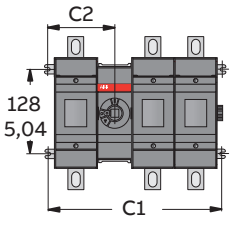

OS315-400					
[mm]	**B11**	**B12**	**B13**	**B21**	**B22**
A	176	176	176	176	176
B	194	194	194	194	194
C	140	140	140	204	204
D	190	254	318	254	318

OS315					
[mm]	**B11**	**B12**	**B21**	**B22**	**B13**
A1	163	227	227	291	291
A2	81,5	81,5	145,5	145,5	81,5
B1	181	245	245	309	309
B2	90,5	90,5	154,5	154,5	90,5
C1	199	263	263	327	327
C2	99,5	99,5	163,5	163,5	99,5

C000011/OS315-400_11_22 B

OS400					
[mm]	**D11**	**D12**	**D13**	**D21**	**D22**
A	193	193	193	193	193
B	166	166	166	166	166
C	140	140	140	204	204
D	190	254	318	254	318

OS400					
[mm]	**B11/ D11**	**B12/ D12**	**B13/ D21**	**B22/ D22**	**B13/ D13**
A1	163	227	227	291	291
A2	81,5	81,5	145,5	145,5	81,5
B1	181	245	245	309	309
B2	90,5	90,5	154,5	154,5	90,5
C1	199	263	263	327	327
C2	99,5	99,5	163,5	163,5	99,5

Front operated switch fuses, IEC

Dimensional drawings

OS315_K and OS400_K

Direct mounted handle

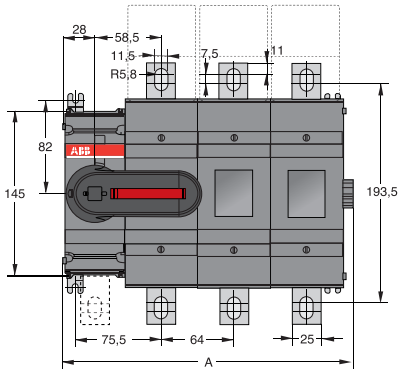

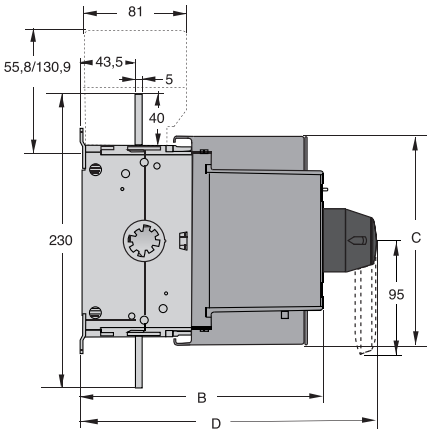

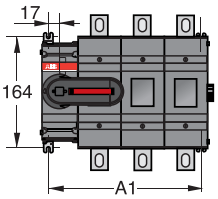

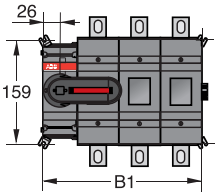

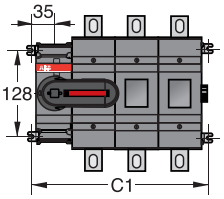

OS315,OS400				
[mm]	**B01K**	**B02K**	**B03K**	**B04K**
A	127	191	255	319
B	176	176	176	176
C	194	194	194	194
D	219	219	219	219
A1	98,5	162,5	226,5	290,5
B1	116,5	180,5	244,5	308,5
C1	134,5	198,5	262,5	326,5

M00081/OS 315-400_01_04K B

OS400				
[mm]	**D01K**	**D02K**	**D03K**	**D04K**
A	127	191	255	319
B	193	193	193	193
C	166	166	166	166
D	236	236	236	236
A1	98,5	162,5	226,5	290,5
B1	116,5	180,5	244,5	308,5
C1	134,5	198,5	262,5	326,5

Front operated switch fuses, IEC
Dimensional drawings

OS 630_P and OS 800_P
Mechanism at the end of the switch fuse

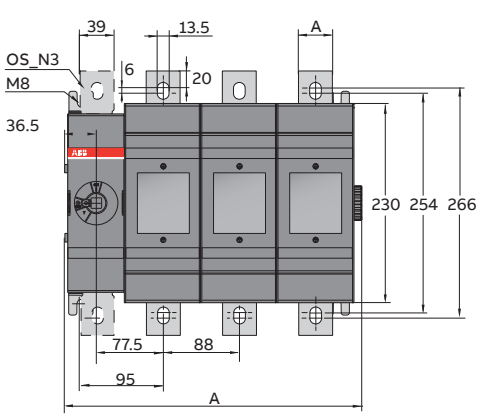

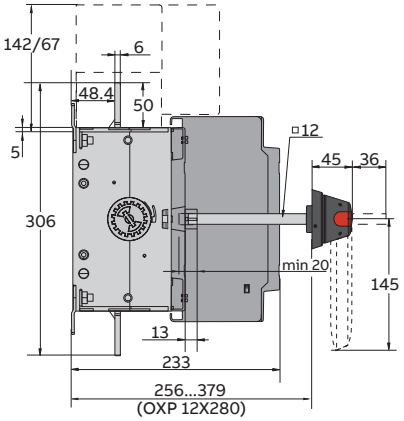

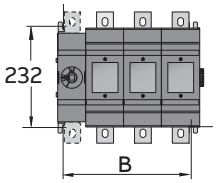

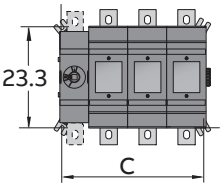

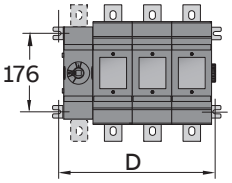

OS630-800				
[mm]	**D/B01**	**D/B02**	**D/B03**	**D/B04**
A	167	255	343	431
B	120	208	296	384
C	150	238	326	414
D	176	264	352	440

M00097/OS600-800_01-04 A / KE00041

Front operated switch fuses, IEC
Dimensional drawings

OS 630_P and OS 800_P
Mechanism between the poles

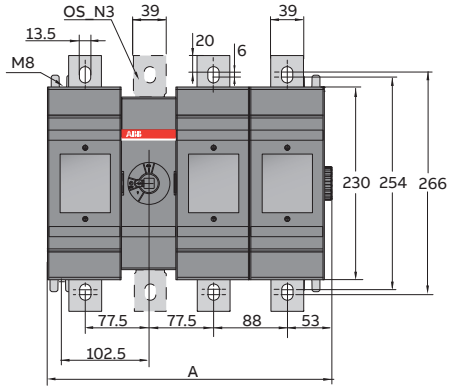

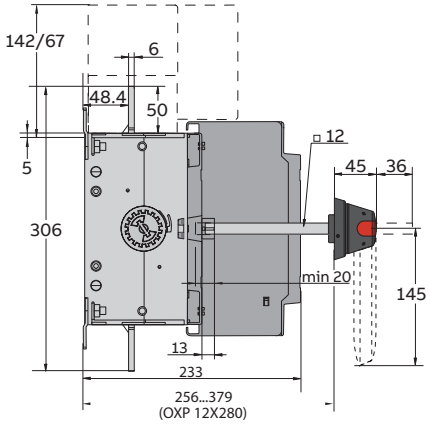

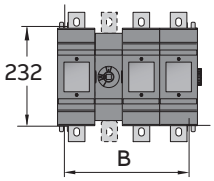

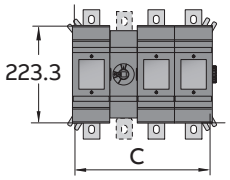

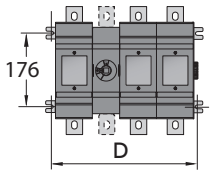

OS630-800				
[mm]	**D/B11**	**D/B12**	**D/B13**	**D/B22**
A	253	341	429	429
B	205	293	381	381
C	235	323	411	411
D	261	349	437	437

KE00042 / M00100/OS600-800_11-22 A

Front operated switch fuses, IEC

Dimensional drawings

OS630_K and OS800_K

Direct mounted handle

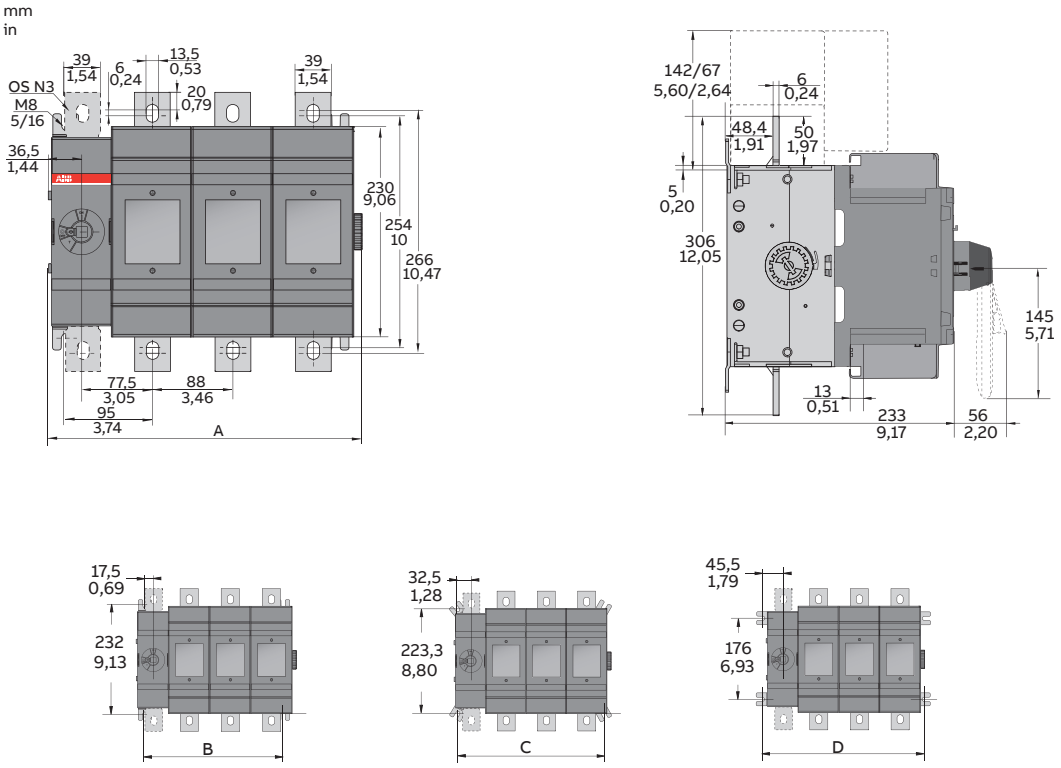

OS630-800_				
[mm/in]	**D/B01**	**D/B02**	**D/B03**	**D/B04**
A	167/6,57	255/10,04	343/13,50	431/16,97
B	120/4,72	208/8,19	296/11,65	384/15,12
C	150/5,91	238/9,37	326/12,83	414/16,30
D	176/6,93	264/10,39	352/13,86	440/17,32

M00229/OS600-800_01-04K A

Front operated switch fuses, IEC

Dimensional drawings

OS1200...1250_P

Mechanism at the end of the switch fuse

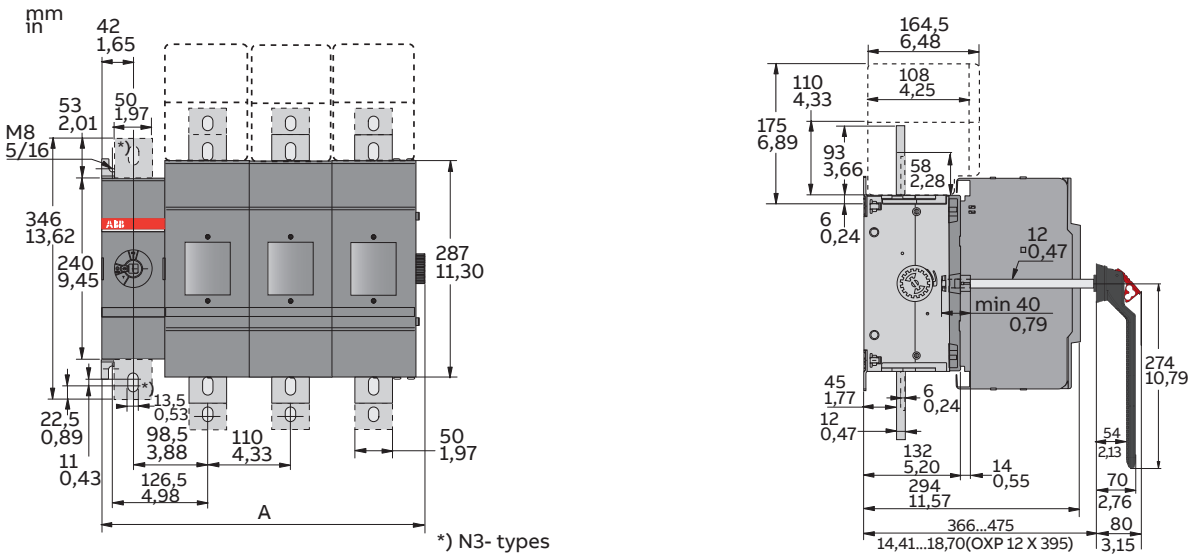

OS1200/1250				
[mm]	**D/B01**	**D/B02**	**D/B03**	**D/B04**
A	209	319	429	539
A1	166	276	386	496
B1	196	306	416	526
C1	222	332	442	552

M00207/OS1200-1250_01-04 C

Front operated switch fuses, IEC

Dimensional drawings

OS1200...1250_P

Mechanism between the poles

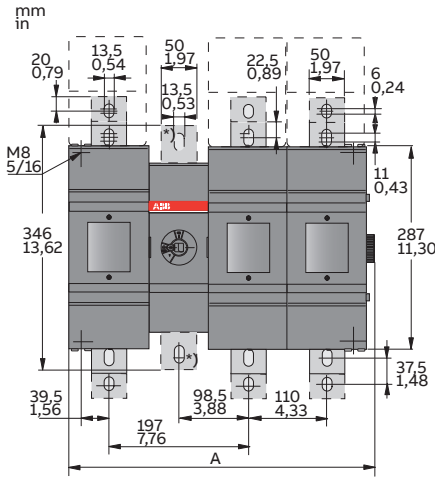

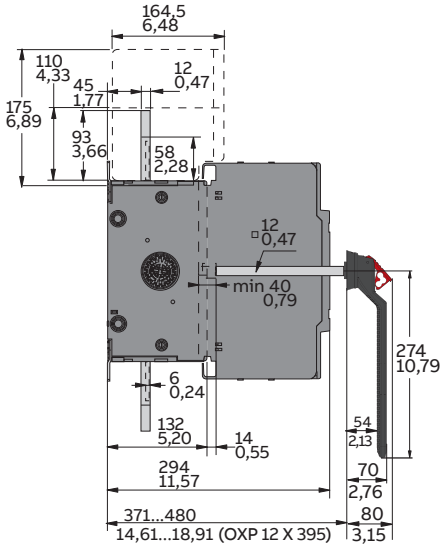

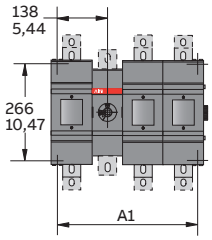

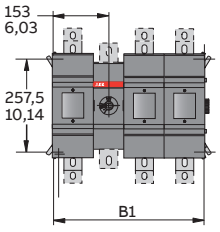

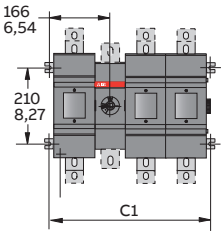

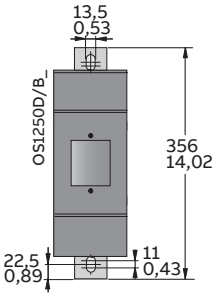

OS1200/1250				
[mm]	**D/B11**	**D/B12**	**D/B13**	**D/B22**
A	322	432	542	542
A1	276	386	496	496
B1	306	416	526	526
C1	322	442	552	552

M00208/OS1200-1250_11-22 C

Front operated switch fuses, IEC

Dimensional drawings

OS1200_K and OS1250_K

Direct mounted handle

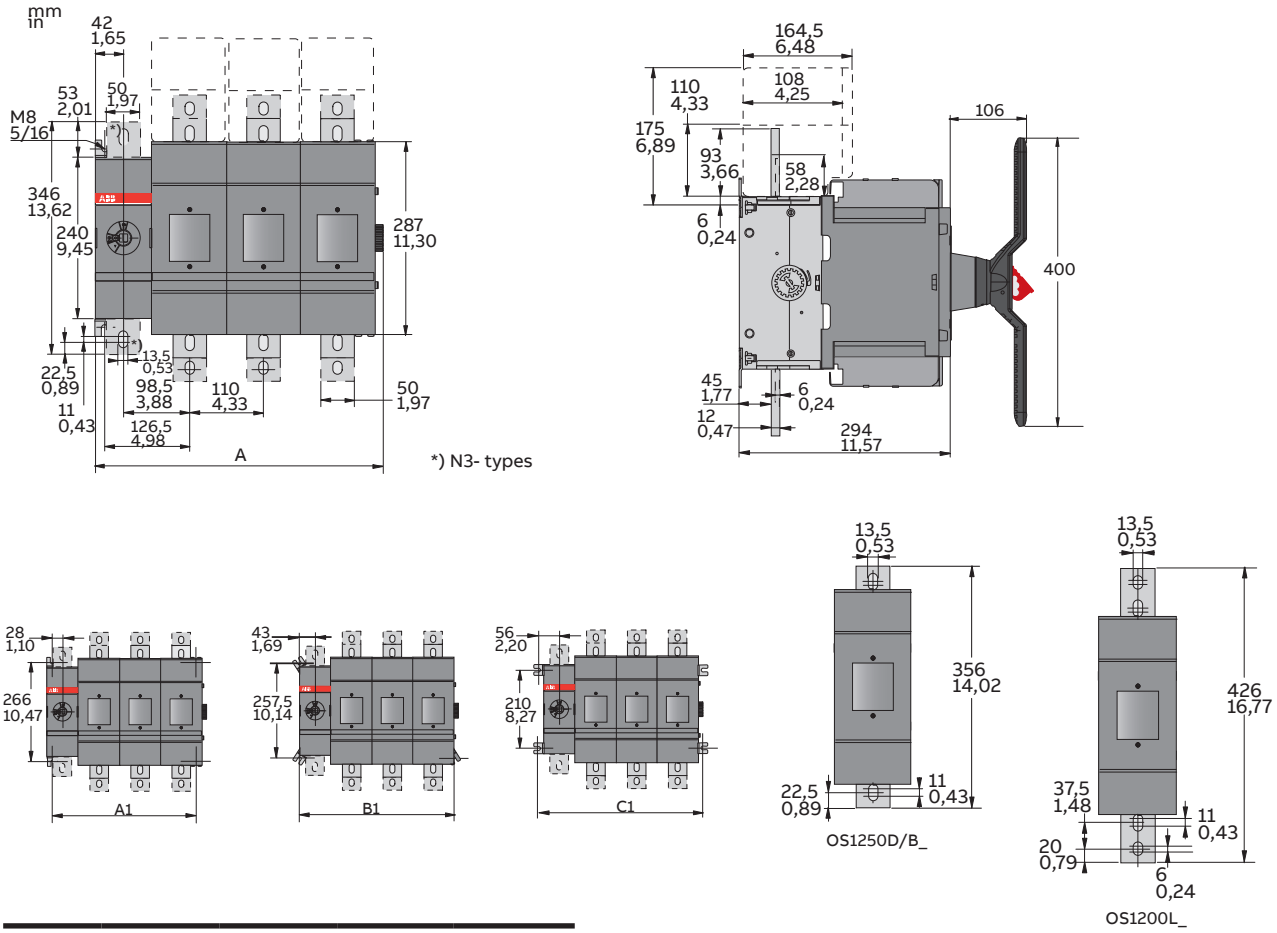

OS1200/1250_				
[mm/in]	**L01**	**L02**	**L03**	**L04**
A	209/8,23	319/12,56	429/16,89	539/21,22
A1	166/6,54	276/10,87	386/15,20	496/19,53
B1	196/7,72	306/12,05	416/16,38	526/20,71
C1	222/8,74	332/13,07	442/17,40	552/21,73

M00231/OS1200-1250_01-04K A

Front operated switch fuses, UL/CSA

Dimensional drawings

OS60GJ_

Mechanism at the end of the switch fuse

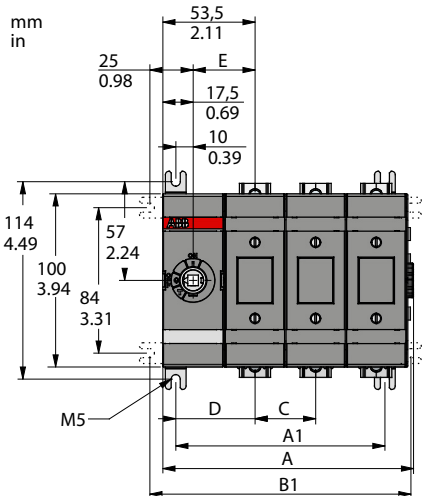

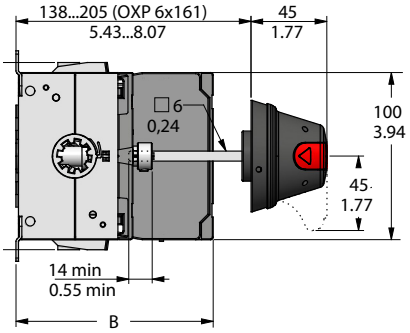

OS60_G				
[mm/in]	**J01**	**J02**	**J03**	**J04**
A	75/2,95	110/4,33	145/5,71	180/7,09
B	118/4,65	118/4,65	118/4,65	118/4,65
C	196	35/1,38	35/1,38	35/1,38
D	46/1,81	46/1,81	46/1,81	46/1,81
E	36/1,42	36/1,42	36/1,42	36/1,42
A1	51/2,01	86/3,39	121/4,77	156/6,14
B1	81/3,19	116/4,57	151/5,95	186/7,33

M00529/ OS60GJ01-04 A

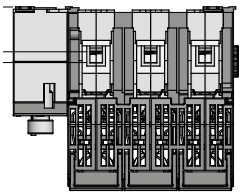

Front operated switch fuses, UL/CSA

Dimensional drawings

OS60GJ_

Mechanism between the poles

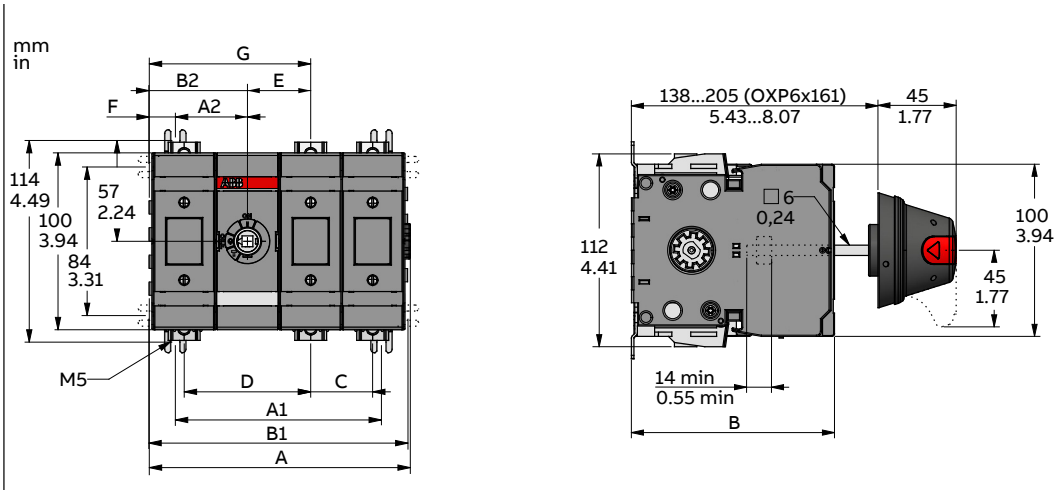

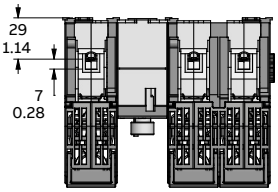

OS60G_				
[mm/in]	**J11**	**J12**	**J13**	**J22**
A	112,5/4,43	147,5/5,81	182,5/7,19	182,6/7,19
B	118/4,65	118/4,65	118/4,65	118/4,65
C	-	35/1,38	35/1,38	35/1,38
D	71,5/2,82	71,5/2,82	71,5/2,82	71,5/2,82
E	36/1,42	36/1,42	36/1,42	36/1,42
F	55,5/2,19	55,5/2,19	55,5/2,19	90,5/3,56
G	91,5/3,60	91,5/3,60	91,5/3,60	91,5/3,60
A1	81,5/3,21	116,5/4,59	151,5/5,97	151,5/5,97
A2	41/1,61	41/1,61	41/1,61	76/2,99
B1	111,5/4,39	146,5/5,77	181,5/7,15	181,5/7,15
B2	56/2,20	56/2,20	56/2,20	91/3,58

M00528/ OS60GJ11-22 A

Front operated switch fuses, UL/CSA

Dimensional drawings

OS100GJ_

Mechanism at the end of the switch fuse

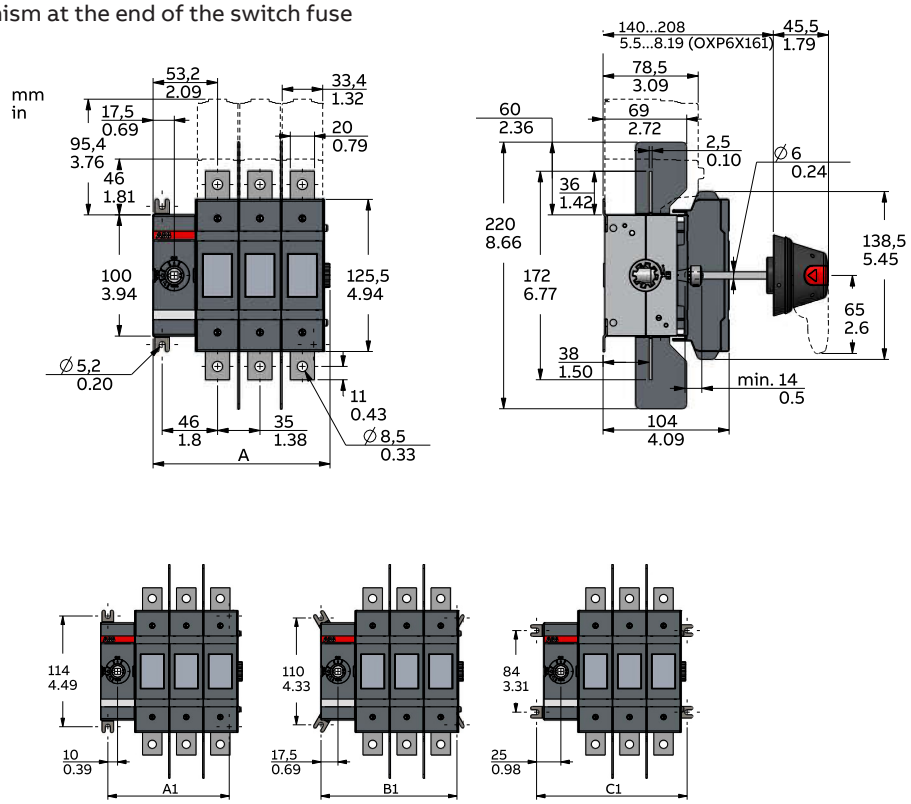

OS100G_			
mm/in	**J02**	**J03**	**J04**
A	111/4.37	146/5.75	181/7.13
A1	90/3.54	125/4.92	160/6.30
B1	105/4.13	140/5.51	175/6.89
C1	120/4.72	155/6.10	190/7.48

M00291/O5100GJ02-04 D

Front operated switch fuses, UL/CSA

Dimensional drawings

OS100GJ_

Mechanism between the poles

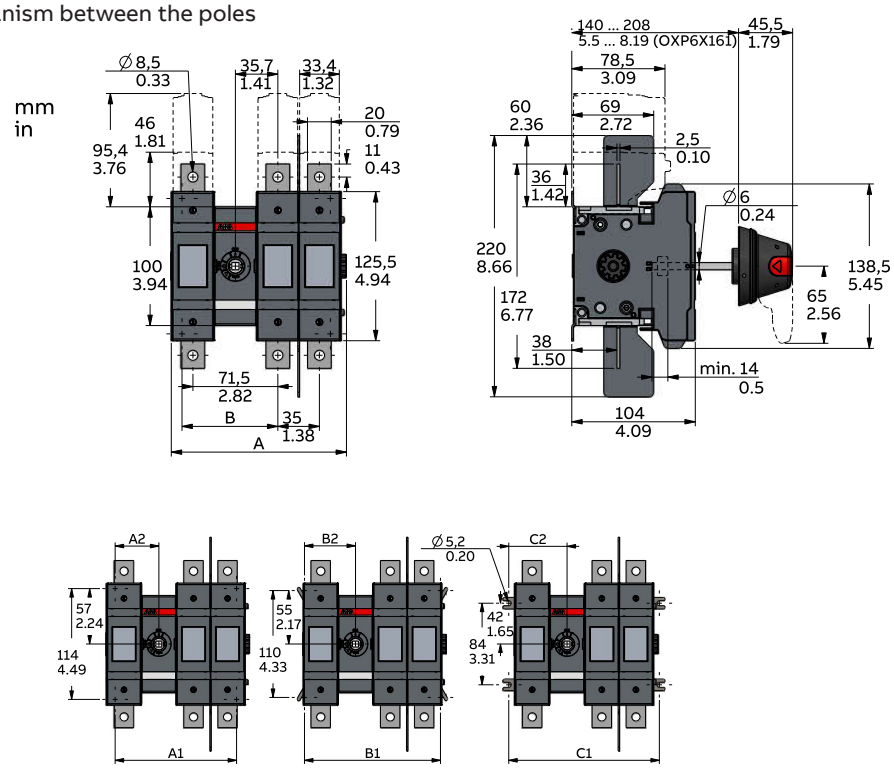

OS100G_					
[mm/in]	**J12**	**J20**	**J22F**	**J30**	**J40F**
A	148/5.83	113/4.45	183/7.20	148/5.83	183/7.20
B	81/3.19	-	116/4.57	-	-
A1	125/4.92	90/3.54	160/6.30	125/4.92	160/6.30
A2	45/1.77	80/3.15	80/3.15	115/4.53	150/5.91
B1	140/5.51	105/4.13	175/6.89	140/5.51	175/6.89
B2	52,5/2.07	87,5/3.44	87,5/3.44	122,5/4.82	157,5/6.20
C1	155/6.10	120/4.72	190/7.48	155/6.10	190/7.48
C2	60/2.36	95/3.74	95/3.74	130/5.12	165/6.50

M00292/O5100GJ12-40F D

Front operated switch fuses, UL/CSA

Dimensional drawings

OS100GJ_K

Direct mounted handle

mm
in

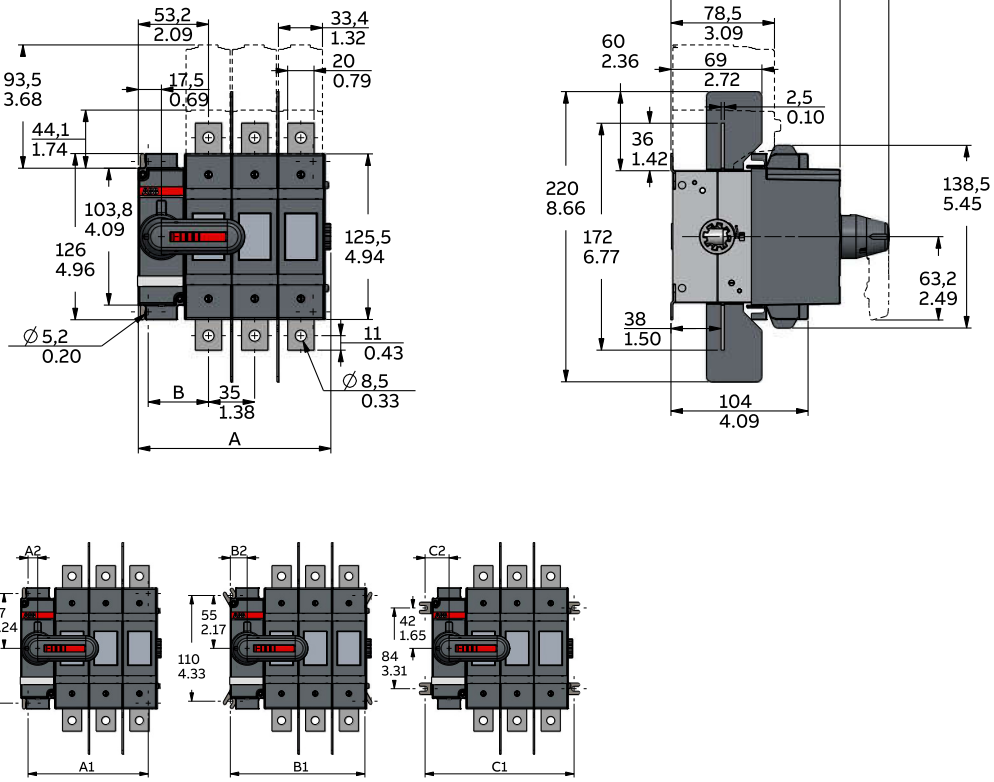

OS100G_K						
[mm/in]	**J02**	**J03**	**J04**	**J20**	**J30**	**J40F**
A	111/4.37	146/5.75	181/7.13	111/4.37	146/5.75	181/7.13
B	46/1.8	46/1.8	46/1.8	-	-	-
A1	90/3.54	125/4.92	160/6.30	90/3.54	125/4.92	160/6.30
A2	10/0.40	10/0.40	10/0.40	80/3.15	115/4.53	150/5.91
B1	105/4.13	140/5.51	175/6.89	105/4.13	140/5.51	175/6.89
B2	17,5/0.69	17,5/0.69	17,5/0.69	87,5/3.44	122,5/4.82	157,5/6.20
C1	120/4.72	155/6.10	190/7.48	120/4.72	155/6.10	190/7.48
C2	25/0.98	25/0.98	25/0.98	95/3.74	130/5.12	165/6.50

M00555/O5100GJ_K A

Front operated switch fuses, UL/CSA

Dimensional drawings

OS200J

Mechanism at the end of the switch fuse

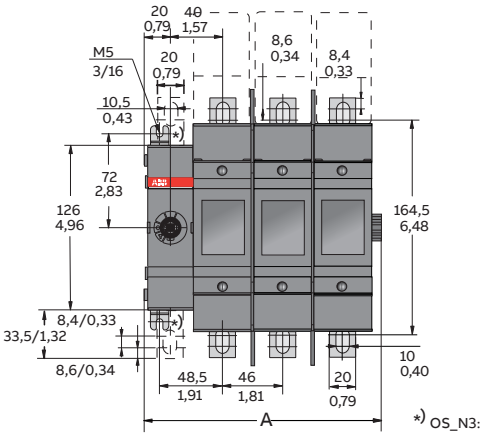

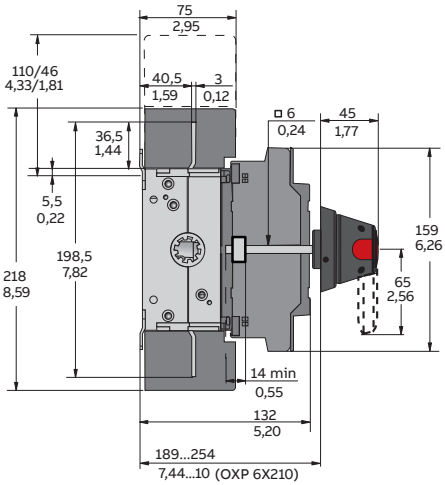

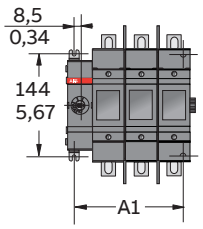

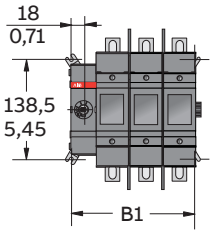

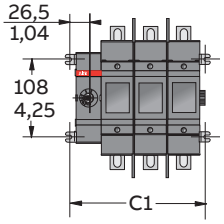

OS200				
[mm/in]	**J01**	**J02**	**J03**	**J04**
A	89,5/3,52	135,5/5,34	181,5/7,15	227,5/8,96
A1	60,5/2,38	106,5/4,19	152,5/6,00	198,5/7,82
B1	79,5/3,13	125,5/4,94	171,5/6,75	217,5/8,56
C1	96,5/3,80	142,5/5,61	188,5/7,42	234,5/9,23

M00001/OS200J01-_04 H

Front operated switch fuses, UL/CSA

Dimensional drawings

OS400J

Mechanism at the end of the switch fuse

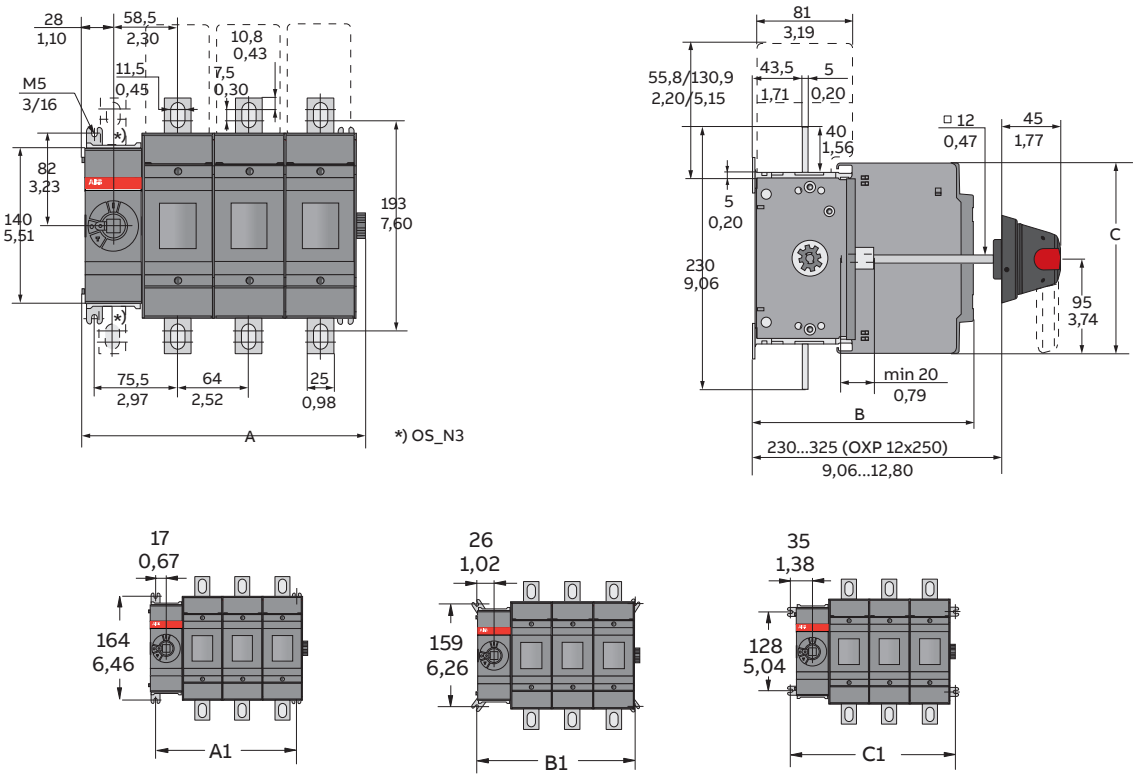

OS400				
[mm/in]	J01	J02	J03	J04
A	127/5,00	191/7,52	255/10,04	319/12,56
B	176/6,93	176/6,93	176/6,93	176/6,93
C	194/7,64	194/7,64	194/7,64	194/7,64

C000012 /OS315_400_01_04 B

Front operated switch fuses, UL/CSA

Dimensional drawings

OS600J and OS800L

Mechanism at the end of the switch fuse

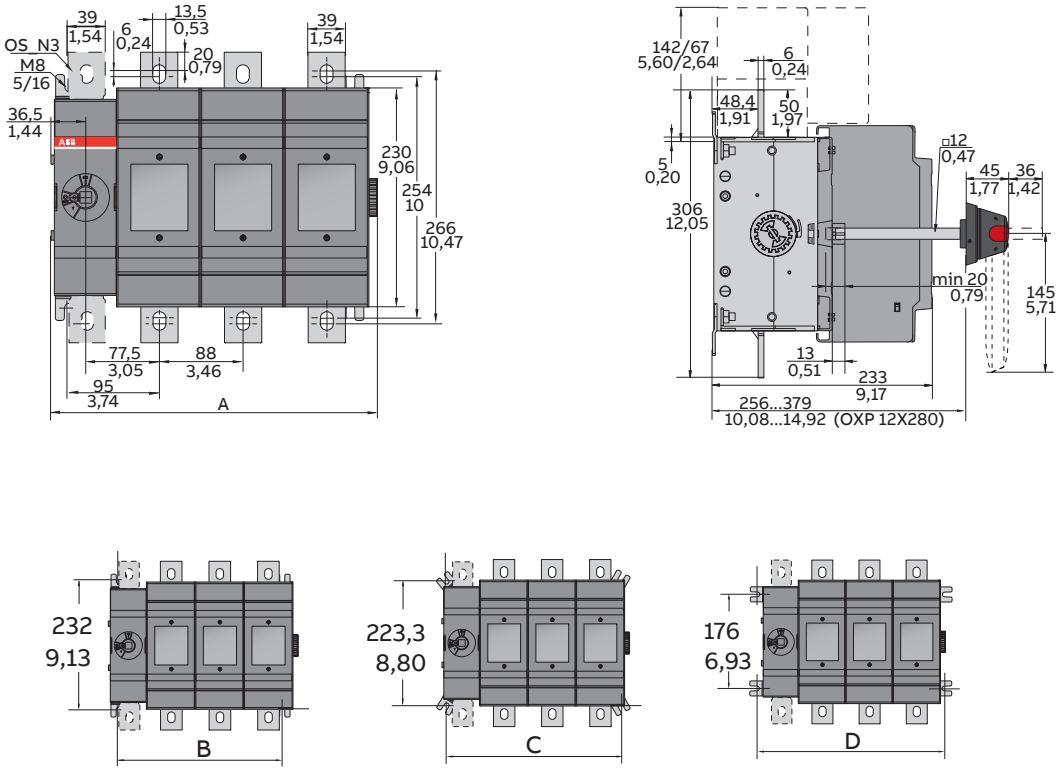

OS600-800				
[mm/in]	J/L01	J/L02	J/L03	J/L04
A	167/6,57	255/10,04	343/13,50	431/16,97
B	120/4,72	208/8,19	296/11,65	384/15,12
C	150/5,91	238/9,37	326/12,83	414/16,30
D	176/6,93	264/10,39	352/13,86	440/17,32

Front operated switch fuses, UL/CSA

Dimensional drawings

OS1200L

Mechanism at the end of the switch fuse

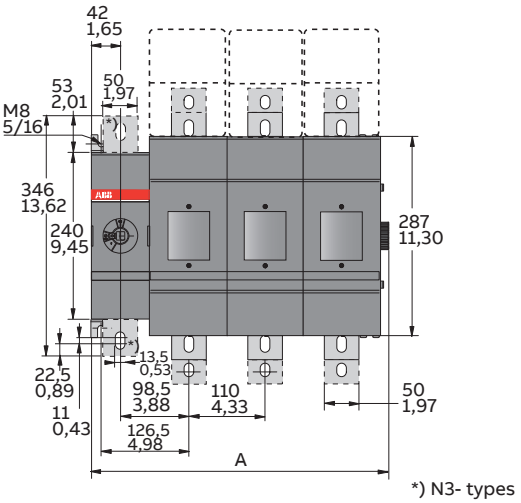

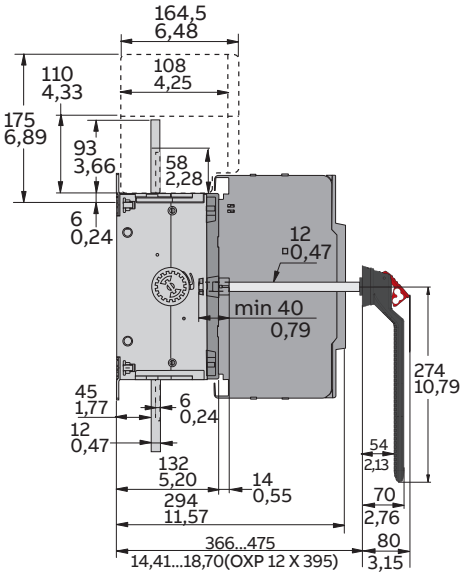

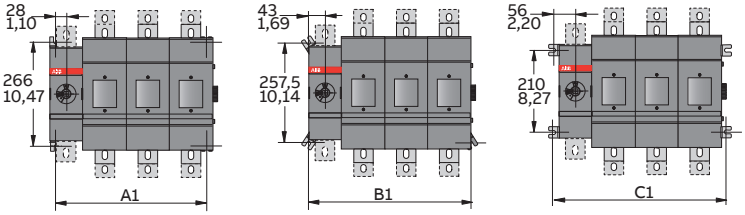

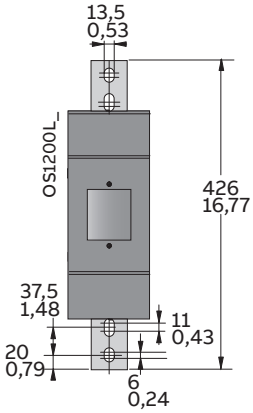

OS1200/1250				
[mm/in]	**L01**	**L02**	**L03**	**L04**
A	209/8,23	319/12,56	429/16,89	539/21,22
A1	166/6,54	276/10,87	386/15,20	496/19,53
B1	196/7,72	306/12,05	416/16,38	526/20,71
C1	222/8,74	332/13,07	442/17,40	552/21,73

M00207/OS1200-1250_01-04 C

Side operated switch fuses, IEC and UL/CSA

Dimensional drawings

OS Mini

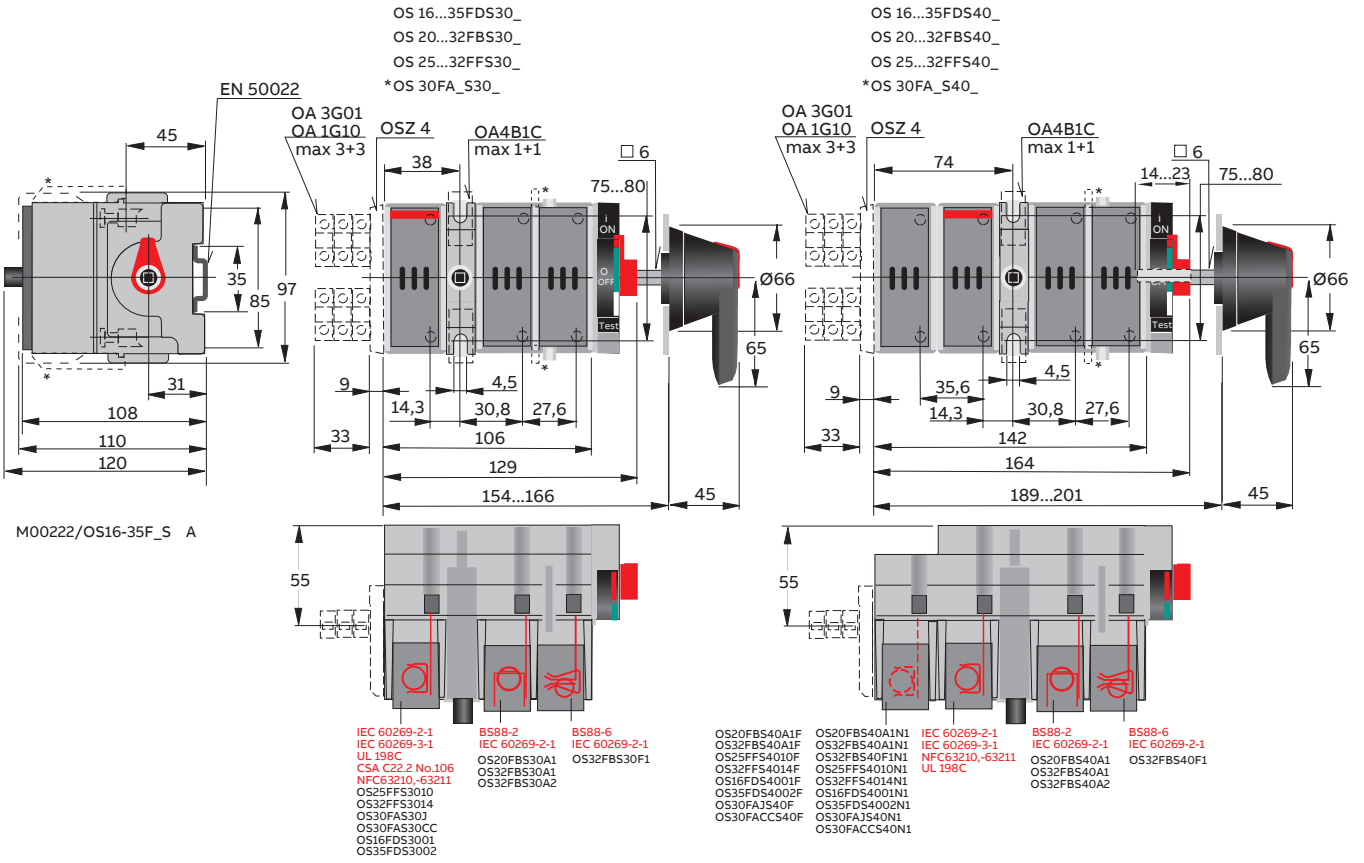

Side operated switch fuses, IEC and UL/CSA

Dimensional drawings

OS 40 Mini

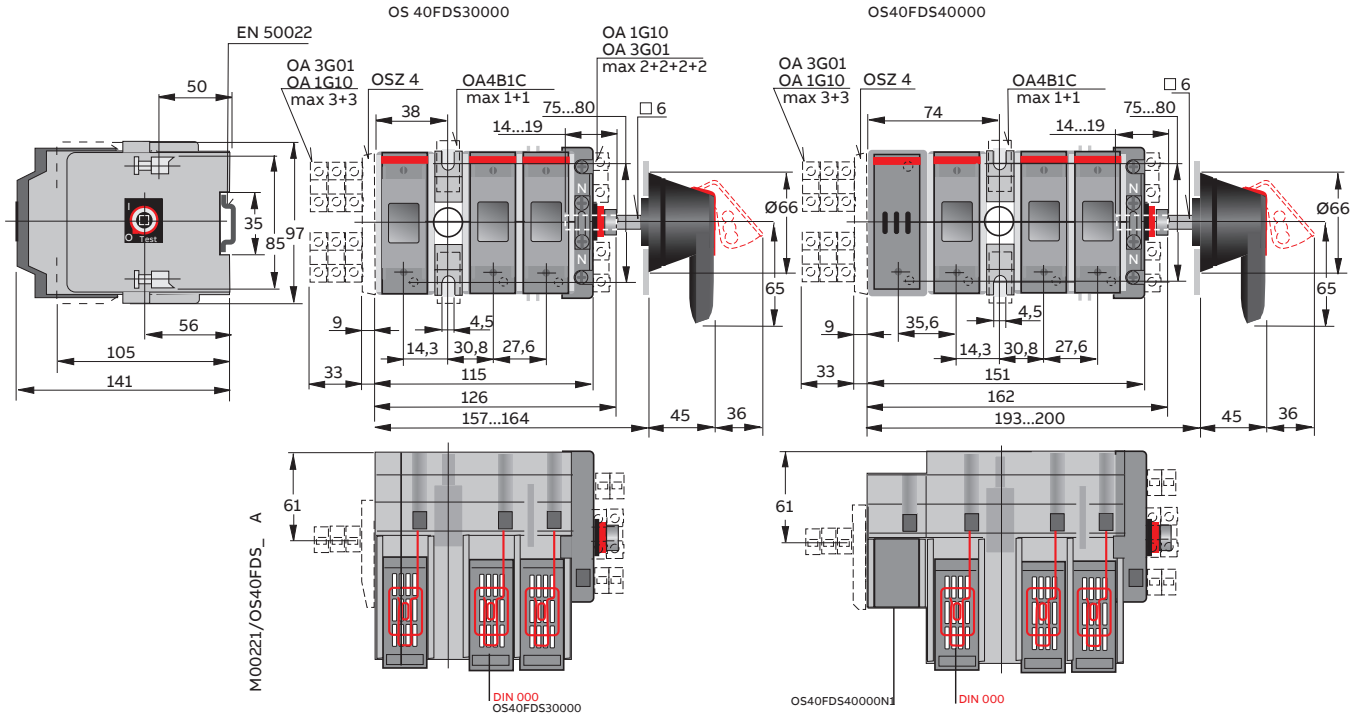

Side operated switch fuses, IEC and UL/CSA

Dimensional drawings

OS32G...63G_S_

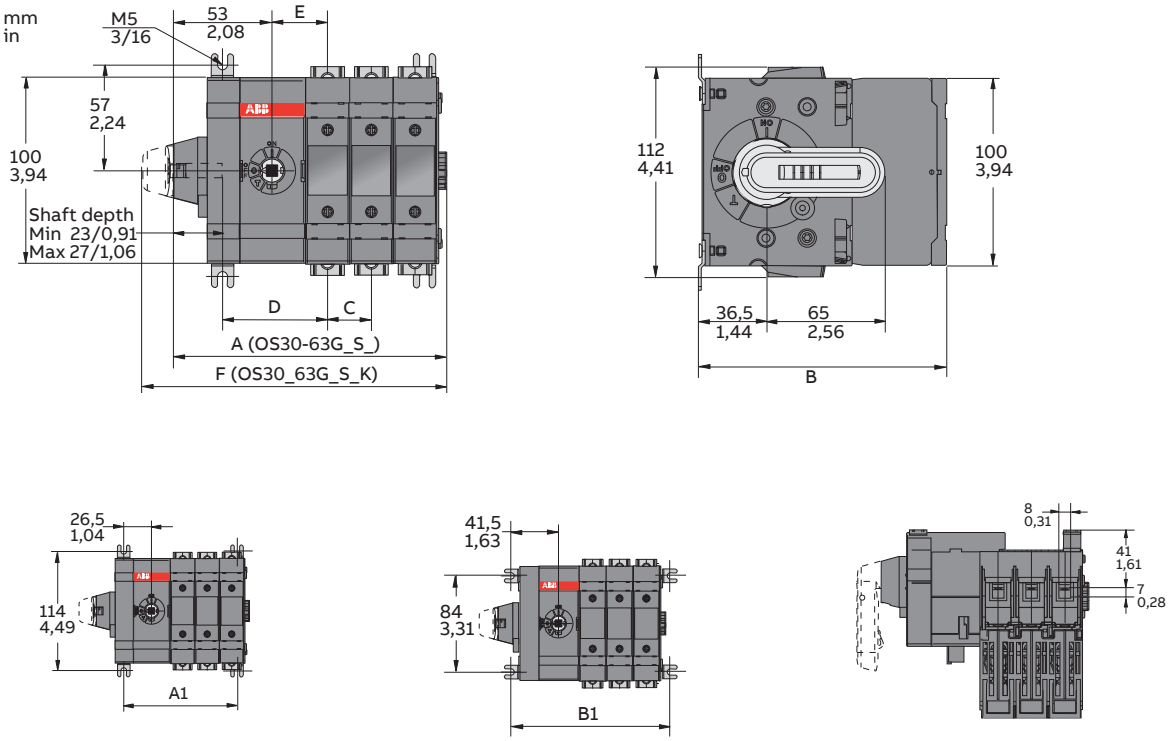

OS32-63G								
[mm]	**DS01**	**DS02**	**DS03**	**DS04**	**B/FS01**	**B/FS02**	**B/FS03**	**B/FS04**
A	99,5	123	146,5	170	99,5	123	146,5	170
B	132,5	132,5	132,5	132,5	120,5	120,5	120,5	120,5
C	-	23,5	23,5	23,5		23,5	23,5	23,5
D	56,5	56,5	56,5	56,5	56,5	56,5	56,5	56,5
E	30	30	30	30	30	30	30	30
F	116,5	140	163,5	187	116,5	140	163,5	187
A1	61,5	85	108,5	132	61,5	85	108,5	132
B1	91,5	115	138,5	162,5	91,5	115	138,5	162,5

M0029/OS30_63G_01_04S A

OS60G_				
[mm/in]	**JS01**	**JS02**	**JS03**	**JS04**
A	109,5/4,31	144,5/5,69	179,5/7,07	214,5/8,44
B	130/5,12	130/5,12	130/5,12	130/5,12
C	-	35/1,38	35/1,38	35/1,38
D	62/2,44	62/2,44	62/2,44	62/2,44
E	36/1,41	36/1,41	36/1,41	36/1,41
F	126,5/4,98	161,5/6,36	196,5/7,74	231,5/9,11
A1	67,5/2,66	102,5/4,04	137,5/5,41	172,5/6,79
B1	37,5/1,48	72,5/2,85	107,5/4,23	142,5/5,61

Side operated switch fuses, IEC and UL/CSA

Dimensional drawings

OS100G...160G_S_

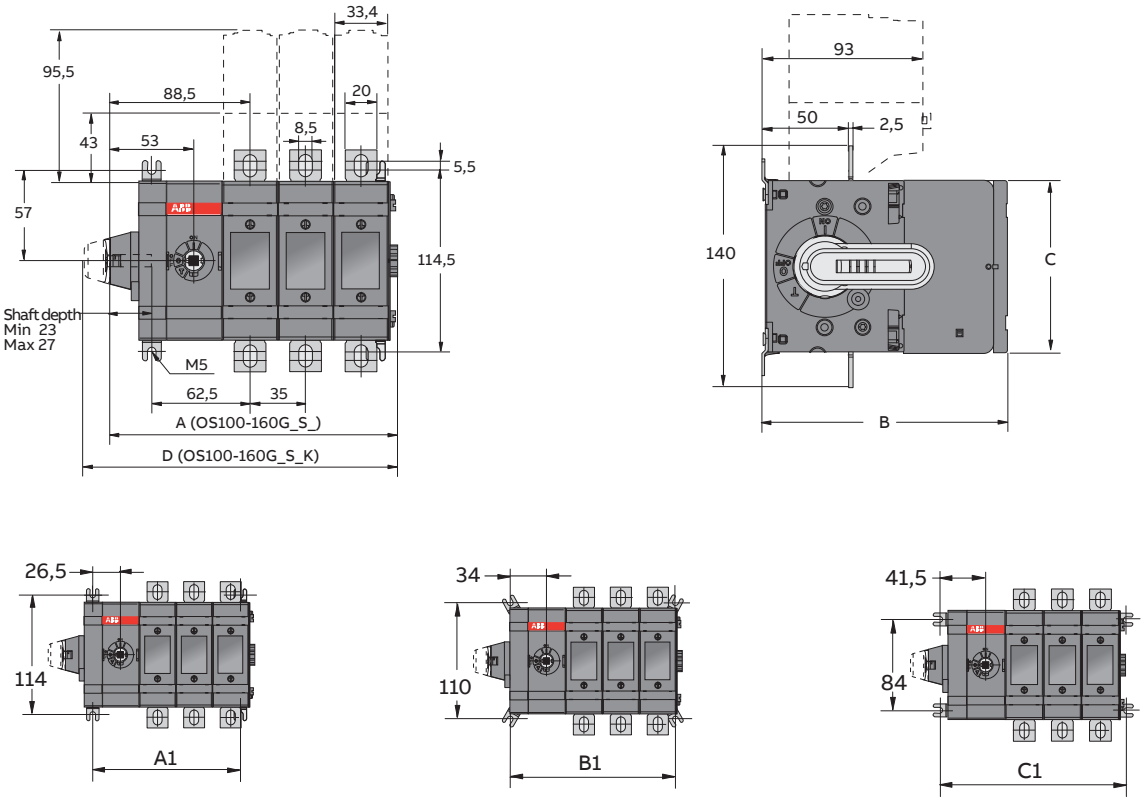

OS100-160G_								
[mm]	**D/F01**	**D/F02**	**D/F03**	**D/F04**	**B01**	**B02**	**B03**	**B04**
A	111,5	146,5	181,5	216,5	111,5	146,5	181,5	216,5
142	142	142	142	142	126,5	126,5	126,5	126,5
C	100	100	100	100	118	118	118	118
D	128,5	163,5	198,5	233,5	128,5	163,5	198,5	233,5
A1	71,5	106,5	141,5	176,5	71,5	106,5	141,5	176,5
B1	86,5	121,5	156,5	191,5	86,5	121,5	156,5	191,5
C1	101,5	136,5	171,5	206,5	101,5	136,5	171,5	206,5

M00298/OS100_160G_S01_04 A

Side operated switch fuses, IEC and UL/CSA

Dimensional drawings

OS100GJS

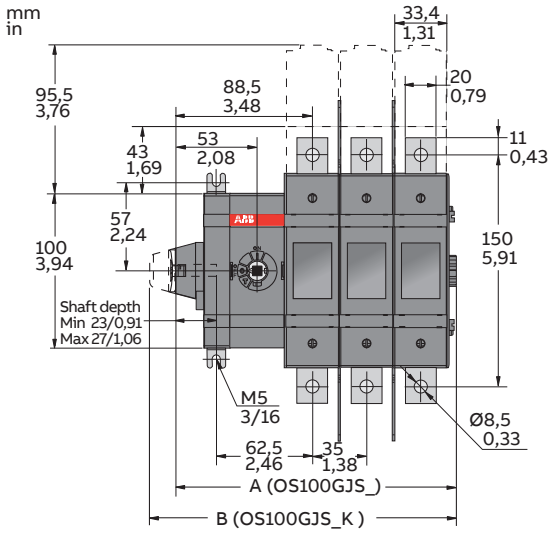

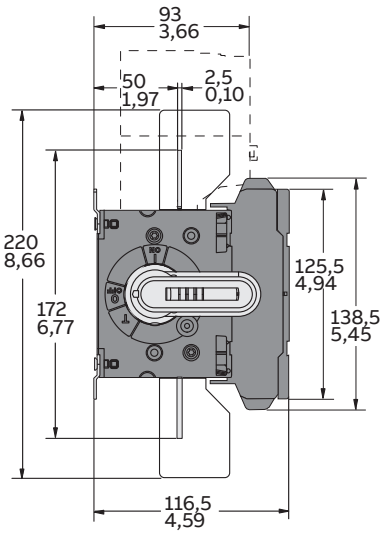

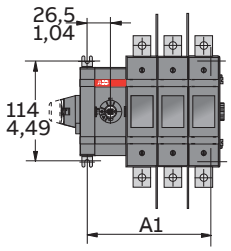

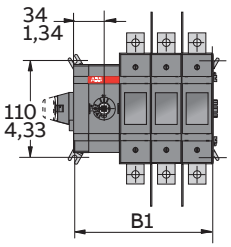

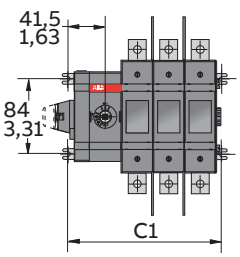

OS100G_				
[mm/in]	JS01	JS02	JS03	JS04
A	111,5/4,39	146,5/5,77	181,5/7,15	216,5/8,52
B	128,5/5,06	163,5/6,44	198,5/7,91	233,5/9,19
A1	71,5/2,81	106,5/4,19	141,5/5,57	176,5/6,95
B1	86,5/3,41	121,5/4,78	156,5/6,16	191,5/7,54
C1	101,5/4,00	136,5/5,37	171,5/6,75	206,5/8,13

M00296/OS30_63G_01_04S A

Side operated switch fuses, IEC and UL/CSA

Dimensional drawings

OS200...250_S_ (IEC only)

OS200_, OS200_K								
[mm/ in]	DS01	BS01	DS02	BS02	DS03	BS03	DS04	BS04
A	162,0/6,38	143,0/5,63	162,0/6,38	143,0/5,12	162,0/6,38	143,0/5,63	162,0/6,38	143,0/5,63
B	164,5/6,48	164,5/6,48	164,5/6,48	164,5/6,48	164,5/6,48	164,5/6,48	164,5/6,48	164,5/6,48
C	198,5/7,81	198,5/7,81	198,5/7,81	198,5/7,81	198,5/7,81	198,5/7,81	198,5/7,81	198,5/7,81
D	8,5/0,33	8,5/0,33	8,5/0,33	8,5/0,33	8,5/0,33	8,5/0,33	8,5/0,33	8,5/0,33
E	36,5/1,44	36,5/1,44	36,5/1,44	36,5/1,44	36,5/1,44	36,5/1,44	36,5/1,44	36,5/1,44
F	144,5/5,69	144,5/5,69	144,5/5,69	144,5/5,69	144,5/5,69	144,5/5,69	144,5/5,69	144,5/5,69
G	48,5/1,91	48,5/1,91	48,5/1,91	48,5/1,91	48,5/1,91	48,5/1,91	48,5/1,91	48,5/1,91
H	-/-	-/-	43,5/1,71	43,5/1,71	43,5/1,71	43,5/1,71	43,5/1,71	43,5/1,71
I	20,0/0,79	20,0/0,79	20,0/0,79	20,0/0,79	20,0/0,79	20,0/0,79	20,0/0,79	20,0/0,79
J	138,5/5,45	138,5/5,45	182,0/7,17	182,0/7,17	225,5/8,88	225,5/8,88	269,0/10,59	269,0/10,59
K	40,0/1,57	40,0/1,57	40,0/1,57	40,0/1,57	40,0/0,39	840,0/1,57	40,0/1,57	40,0/1,57
L	10,0/0,39	10,0/0,39	10,0/0,39	10,0/0,39	10,0/0,39	10,0/0,39	10,0/0,39	10,0/0,39
M	8,5/0,33	8,5/0,33	8,5/0,33	8,5/0,33	8,5/0,33	8,5/0,33	8,5/0,33	8,5/0,33
N	121,5/4,78	121,5/4,78	165,0/6,50	165,0/6,50	208,5/8,21	208/8,21	252,0/9,92	252,0/9,92
A1	60,5/2,38	60,5/2,38	104,0/4,09	104,0/4,09	147,5/5,81	147,5/5,81	191,0/7,52	191,0/7,52
B1	79,5/3,13	79,5/3,13	123,0/4,84	123,0/4,84	166,5/6,56	166,5/6,56	210,0/8,27	210,0/8,27
C1	96,5/3,80	96,5/3,80	140,0/5,51	140,0/5,51	183,5/7,22	183,5/7,22	227,0/8,94	227,0/8,94

M00153/OS200-250_SO01-04_ C

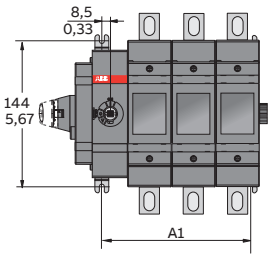

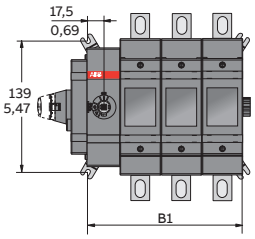

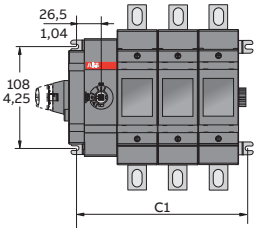

OS250_, OS250_K				
[mm/ in]	DS01	BS01	DS02	BS02
A	154,5/6,06	154,0/6,06	154,0/6,06	154,0/6,06
B	162,0/6,38	162,0/6,38	162,0/6,38	162,0/6,38
C	193,0/7,60	193,0/7,60	193,0/7,60	193,0/7,60
D	4,0/0,16	4,0/0,16	4,0/0,16	4,0/0,16
E	33,5/1,30	33,5/1,32	33,5/1,32	33,5/1,32
F	148,5/5,85	148,5/5,85	148,5/5,85	148,5/5,85
G	53,5/2,11	53,5/2,11	53,5/2,11	53,5/2,11
H	-/-	54,0/2,13	54,0/2,13	54,0/2,13
I	25,0/0,98	25,0/0,98	25,0/0,98	25,0/0,98
J	148,5/5,85	202,5/7,97	256,5/10,10	310,5/12,22
K	45,0/1,77	45,0/1,77	45,0/1,77	45,0/1,77
L	11,0/0,43	11,0/0,43	11,0/0,43	11,0/0,43
M	11,5/0,45	11,5/0,45	11,5/0,45	11,5/0,45
N	131,5/5,18	186,0/7,32	240,0/9,45	294,0/11,57
A1	70,5/2,78	124,5/4,90	178,5/7,03	232,5/9,15
B1	89,5/3,52	143,5/5,65	197,5/7,78	251,5/9,90
C1	106,5/4,19	214,5/8,44	268,5/10,57	322,5/12,70

M00528/ OS60GJ11-22 A

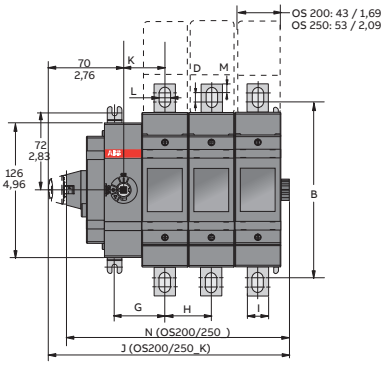

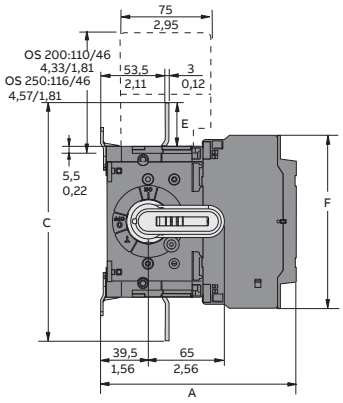

Side operated switch fuses, IEC and UL/CSA

Dimensional drawings

OS315...400_S_

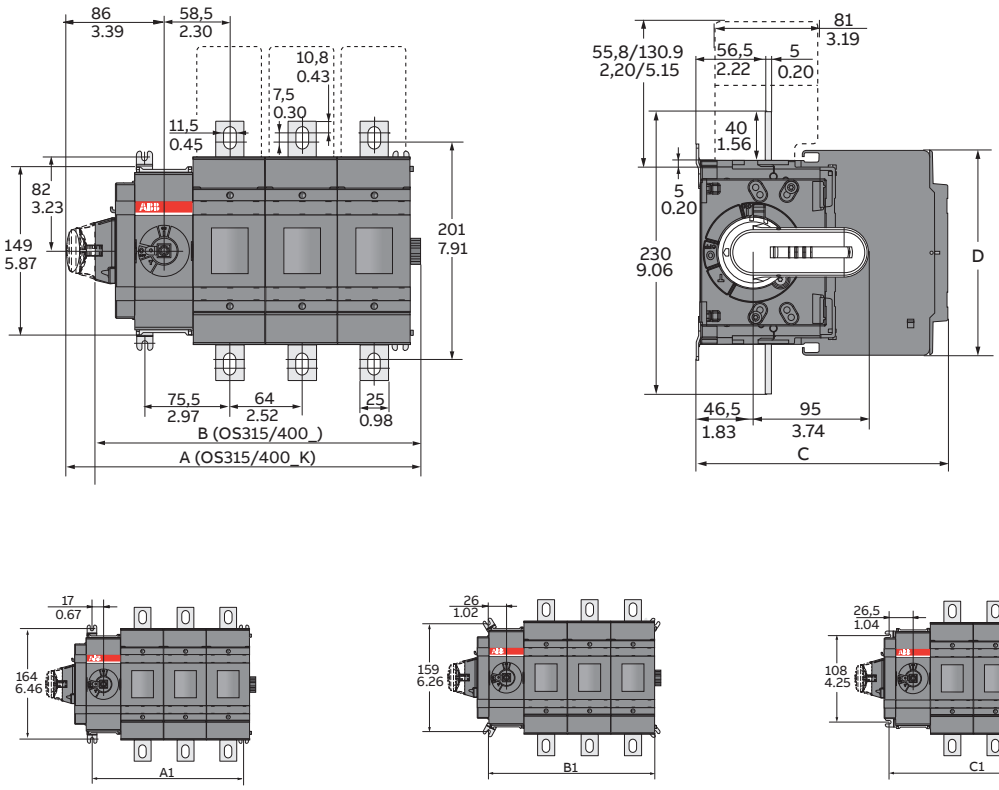

OS315, OS315_K, OS400, OS400_K				
[mm/ in]	BS01/ JS01	BS02/ JS02	BS03/ JS03	BS04/ JS04
A	185,0/7,28	249,0/9,80	313,0/12,32	377,0/14,84
B	160,0/6,30	224,0/8,82	288,0/11,34	352,0/13,86
C	189,0/7,44	189,0/7,44	189,0/7,44	189,0/7,44
D	194,0/7,64	194,0/7,64	194,0/7,64	194,0/7,64
A1	98,5/3,88	162,5/6,40	226,5/8,92	290,5/11,44
B1	116,5/4,59	180,5/7,11	244,5/9,63	308,5/12,15
C1	134,5/5,30	198,5/7,81	262,5/10,33	326,5/12,85

OS400, OS400 K				
[mm/ in]	DS01	DS02	DS03	DS04
A	185,0/7,28	249,0/9,80	313,0/12,32	377,0/14,84
B	160,0/6,30	224,0/8,82	288,0/11,34	352,0/13,86
C	206,0/8,12	206,0/8,12	206,0/8,12	206,0/8,12
D	166,0/6,54	166,0/6,54	166,0/6,54	166,0/6,54
A1	98,5/3,88	162,5/6,40	226,5/8,92	290,5/11,44
B1	116,5/4,59	180,5/7,11	244,5/9,63	308,5/12,15
C1	134,5/5,30	198,5/7,81	262,5/10,33	326,5/12,85

M00154/OS315-400_S01-04_ C

Side operated switch fuses, IEC and UL/CSA

Dimensional drawings

OS600...OS800_S_

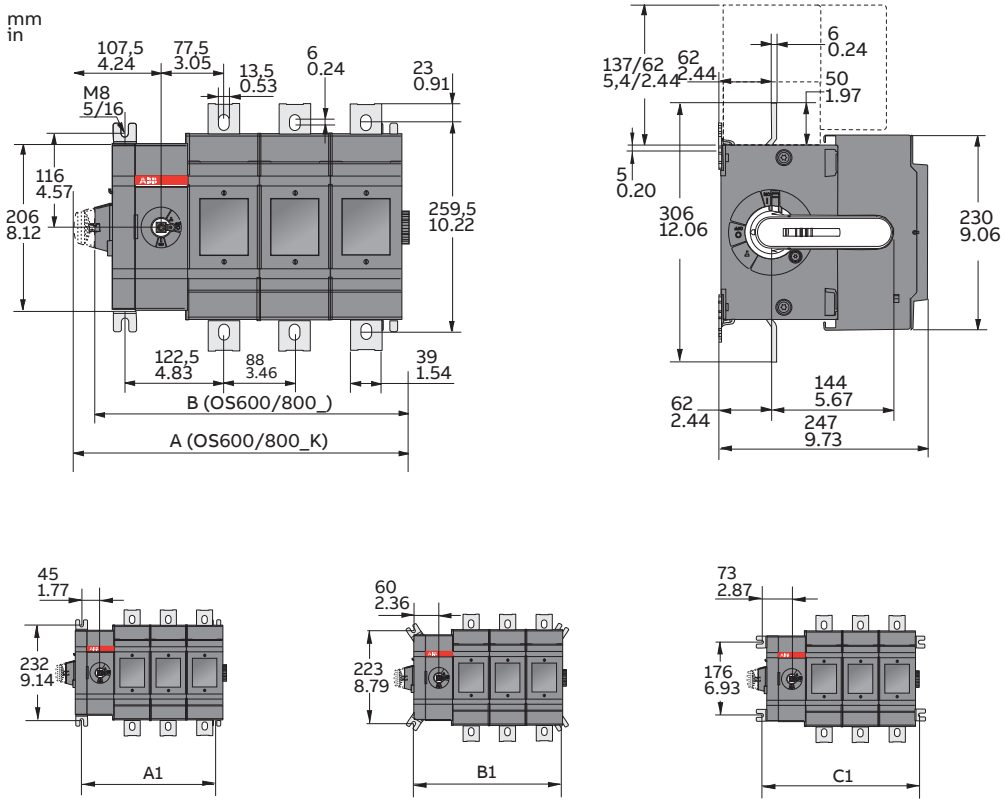

OS600/630/800_, OS600/630/800_K				
[mm/in]	**DS/BS/JS01**	**DS/BS/JS02**	**DS/BS/JS03**	**DS/BS/JS04**
A	238,0/9,38	326,0/12,84	414,0/16,31	502,0/19,78
B	213,0/8,39	301,0/11,86	389,0/15,32	477,0/18,79
A1	147,5/5,81	235,5/9,28	323,5/12,75	411,5/16,21
B1	177,5/6,99	265,5/10,46	353,5/13,93	441,5/17,39
C1	203,5/8,02	291,5/11,48	379,5/14,95	467,5/18,42

M00146/OS600-800_S01_-04_ C

Special connected switch fuses

Dimensional drawings

OS200_12/22_ and OS250_12/22 (BB)

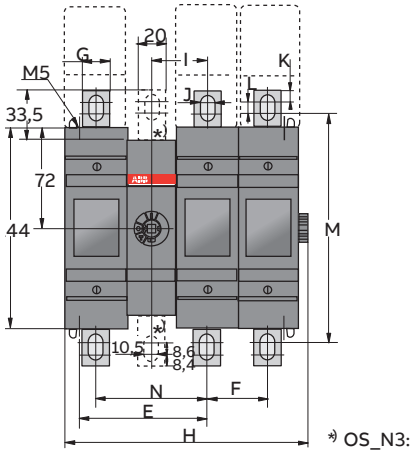

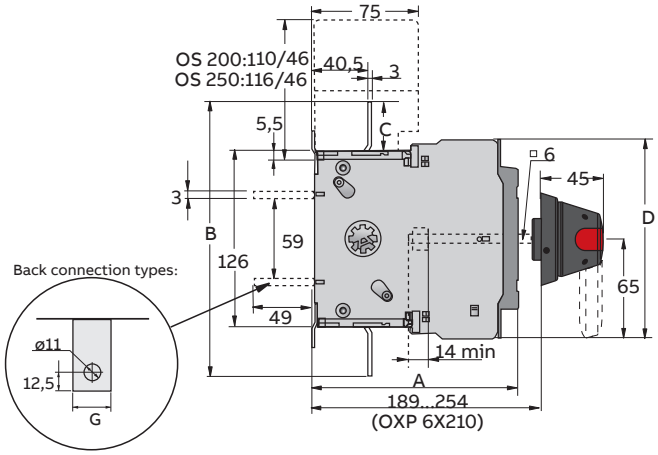

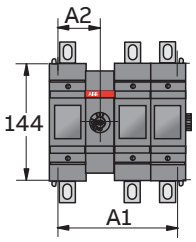

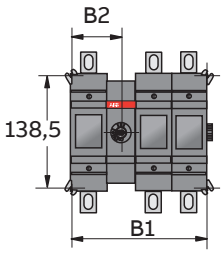

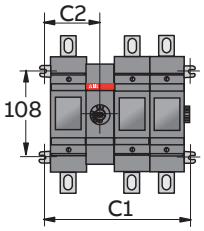

OS200								
[mm]	D11	B11	D12	B12	D13	B13	D22	B22
A	149	130	149	130	141	130	149	130
B	199	199	199	199	199	199	199	199
C	36,5	36,5	36,5	36,5	36,5	36,5	36,5	36,5
D	144,5	144,5	144,5	144,5	144,5	144,5	144,5	144,5
E	92	92	92	92	92	92	135,5	135,5
F	43,5	43,5	43,5	43,5	43,5	43,5	43,5	43,5
G	20	20	20	20	20	20	20	20
H	132	132	175,5	175,5	219	219	219	219
I	40	40	40	40	40	40	40	40
J	10	10	10	10	10	10	10	01
K	8,4	8,4	8,4	8,4	8,4	8,4	8,4	8,4
L	8,6	8,6	8,6	8,6	8,6	8,6	8,6	8,6
M	165	165	165	165	165	165	165	165
N	80	80	80	80	80	80	80	80
A1	104	104	147,5	147,5	191	191	191	191
A2	52	52	52	52	52	52	95,5	95,5
B1	123	123	166,5	166,5	210	210	210	210
B2	61,5	61,5	61,5	61,5	61,5	61,5	105	105
C1	140	140	183,5	183,5	227	227	227	227
C2	70	70	70	70	70	70	113,5	113,5

OS250				
[mm]	D11	D12	D13	D22
A	154	154	154	154
B	193	193	193	193
C	33,5	33,5	33,5	33,5
D	148,5	148,5	148,5	148,5
E	112,5	112,5	112,5	161
F	54	54	54	54
G	25	25	25	25
H	152	206	260	260
I	45	45	45	45
J	11	11	11	11
K	11,5	11,5	11,5	11,5
L	4	4	4	4
M	162	162	162	162
N	90	90	90	90
A1	124	178	232	232
A2	62	62	62	116
B1	143	197	251	251
B2	71,5	71,5	71,5	125,5
C1	160	214	268	268
C2	80	80	80	134

M00014/OS200_250_11_22 K

Special connected switch fuses

Dimensional drawings

OS200_03/04_ and OS250_03/04 (BB)

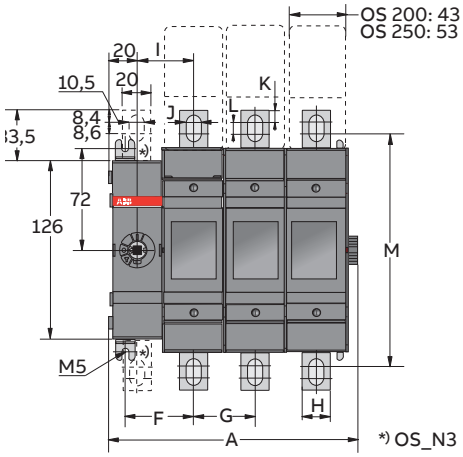

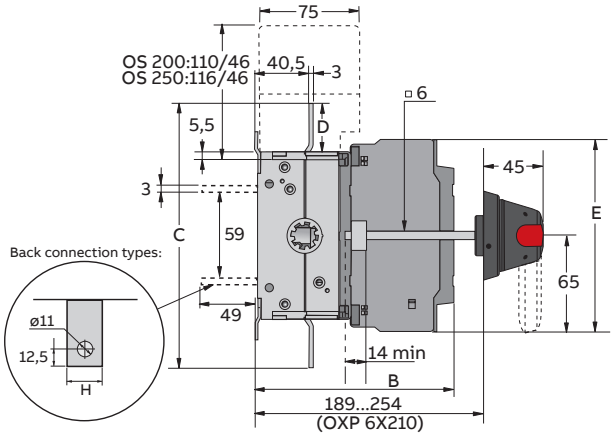

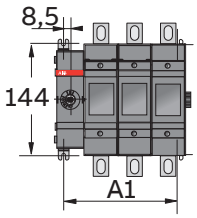

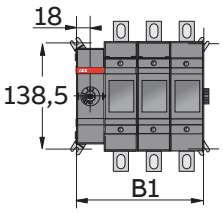

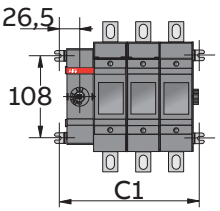

OS200_BB_								
[mm]	**D01**	**B01**	**D02**	**B02**	**D03**	**B03**	**D04**	**B04**
A	89,5	89,5	133	133	176,5	176,5	220	220
B	149	130	149	130	149	130	149	149
C	198,5	198,5	198,5	198,5	198,5	198,5	198,5	198,5
D	36,5	36,5	36,5	36,5	36,5	36,5	36,5	36,5
E	144,5	144,5	144,5	144,5	144,5	144,5	144,5	144,5
F	48,5	48,5	48,5	48,5	48,5	48,5	48,5	48,5
G	-	-	43,5	43,5	43,5	43,5	43,5	43,5
H	20	20	20	20	20	20	20	20
I	40	40	404	40	40	40	40	40
J	10	10	10	10	10	10	10	01
K	8,4	8,4	8,4	8,4	8,4	8,4	8,4	8,4
L	8,6	8,6	8,6	8,6	8,6	8,6	8,6	8,6
M	164,5	164,5	164,5	164,5	164,5	164,5	164,5	164,5
A1	60,5	60,5	104	104	147,5	147,5	191	191
B1	79,5	79,5	123	123	166,5	166,5	210	210
C1	96,5	96,5	140	140	183,5	183,5	227	227

M00008/OS200_250_01_04 K / M07023

OS250_BB_				
[mm]	**D01/ B01**	**D02/ B02**	**D03/ B03**	**D04/ B04**
A	99,5	153,5	207,5	261,5
B	154	154	154	154
C	193	193	193	193
D	33,5	33,5	33,5	33,5
E	148,5	148,5	148,5	148,5
F	53,5	53,5	53,5	53,5
G	-	54	54	54
H	25	25	25	25
I	45	45	45	45
J	11	11	11	11
K	11,5	11,5	11,5	11,5
L	4	4	4	4
M	162	162	162	162
A1	70,5	124,5	178,5	232,5
B1	89,5	143,5	197,5	251,5
C1	106,5	160,5	214,5	268,5

Special connected switch fuses

Dimensional drawings

OS315_12/22_ and OS400_12/22 (BB)

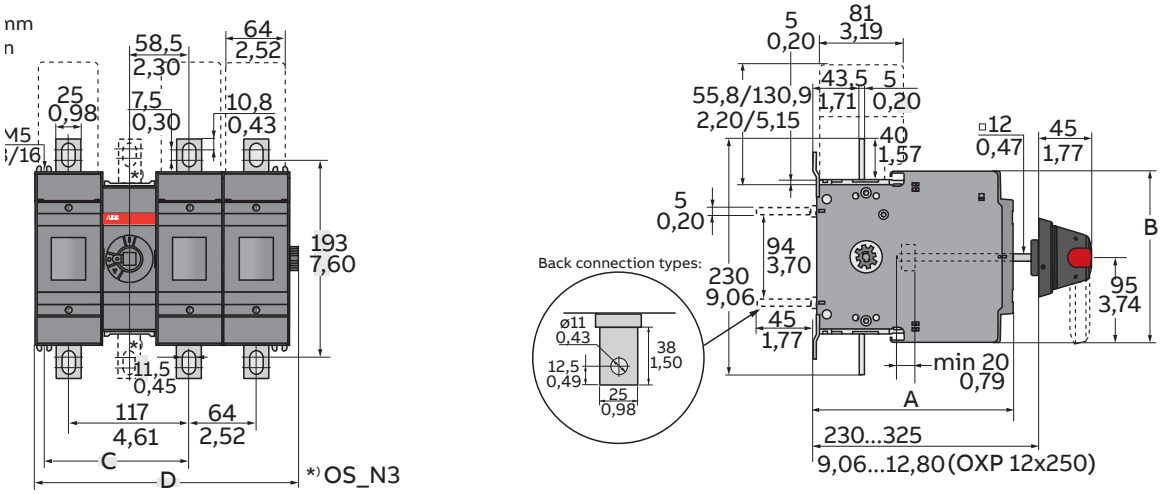

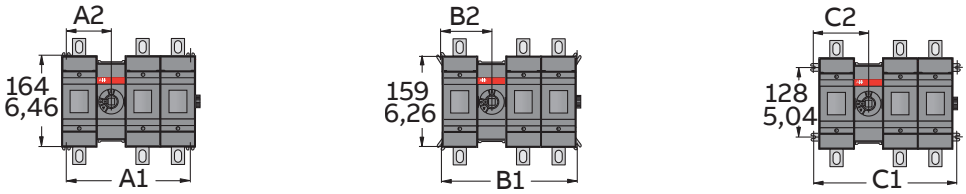

OS315-400_BB_					
[mm]	**B11**	**B12**	**B13**	**B21**	**B22**
A	176	176	176	176	176
B	194	194	194	194	194
C	140	140	140	204	204
D	190	254	318	254	318

OS400_BB_					
[mm]	**D11**	**D12**	**D13**	**D21**	**D22**
A	193	193	193	193	193
B	166	166	166	166	166
C	140	140	140	204	204
D	190	254	318	254	318

OS315_BB_					
[mm]	**B11**	**B12**	**B21**	**B22**	**B13**
A1	163	227	227	291	291
A2	81,5	81,5	145,5	145,5	81,5
B1	181	245	245	309	309
B2	90,5	90,5	154,5	154,5	90,5
C1	199	263	263	327	327
C2	99,5	99,5	163,5	163,5	99,5

C000011/OS315-400_11_DD D/M07024

OS400_BB_					
[mm]	**B11/ D11**	**B12/ D12**	**B21/ D21**	**B22/ D22**	**B13/ D13**
A1	163	227	227	291	291
A2	81,5	81,5	145,5	145,5	81,5
B1	181	245	245	309	309
B2	90,5	90,5	154,5	154,5	90,5
C1	199	263	263	327	327
C2	99,5	99,5	163,5	163,5	99,5

Special connected switch fuses

Dimensional drawings

OS315_03/04_ and OS400_03/04 (BB)

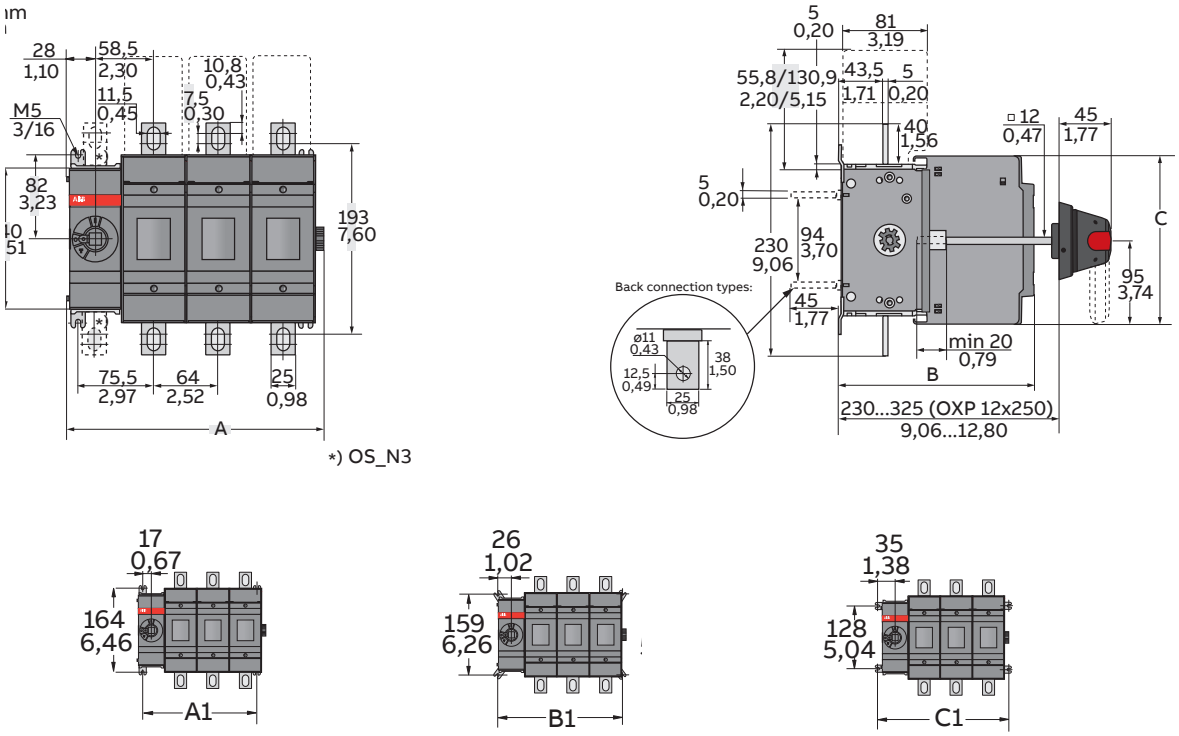

OS315 - 400_BB_				
[mm]	B01	B02	B03	B04
A	127	191	255	319
B	176	176	176	176
C	194	194	194	194

OS400_BB_				
[mm]	D01	D02	D03	D04
A	127	191	255	319
B	193	193	193	193
C	166	166	166	166

OS315_BB_				
[mm]	B01	B02	B03	B04
A1	98,5	162,5	226,5	290,5
B1	116,5	180,5	244,5	308,5
C1	134,5	198,5	262,5	326,5

C000012 /OS315_400_01_04 D/M07025

OS400_BB_				
[mm]	B01/ D01	B02/ DO2	B03/ DO3	B04/ DO4
A1	98,5	162,5	226,5	290,5
B1	116,5	180,5	244,5	308,5
C1	134,5	198,5	262,5	326,5

Special connected switch fuses

Dimensional drawings

OS125G...160GD12LR (LR)

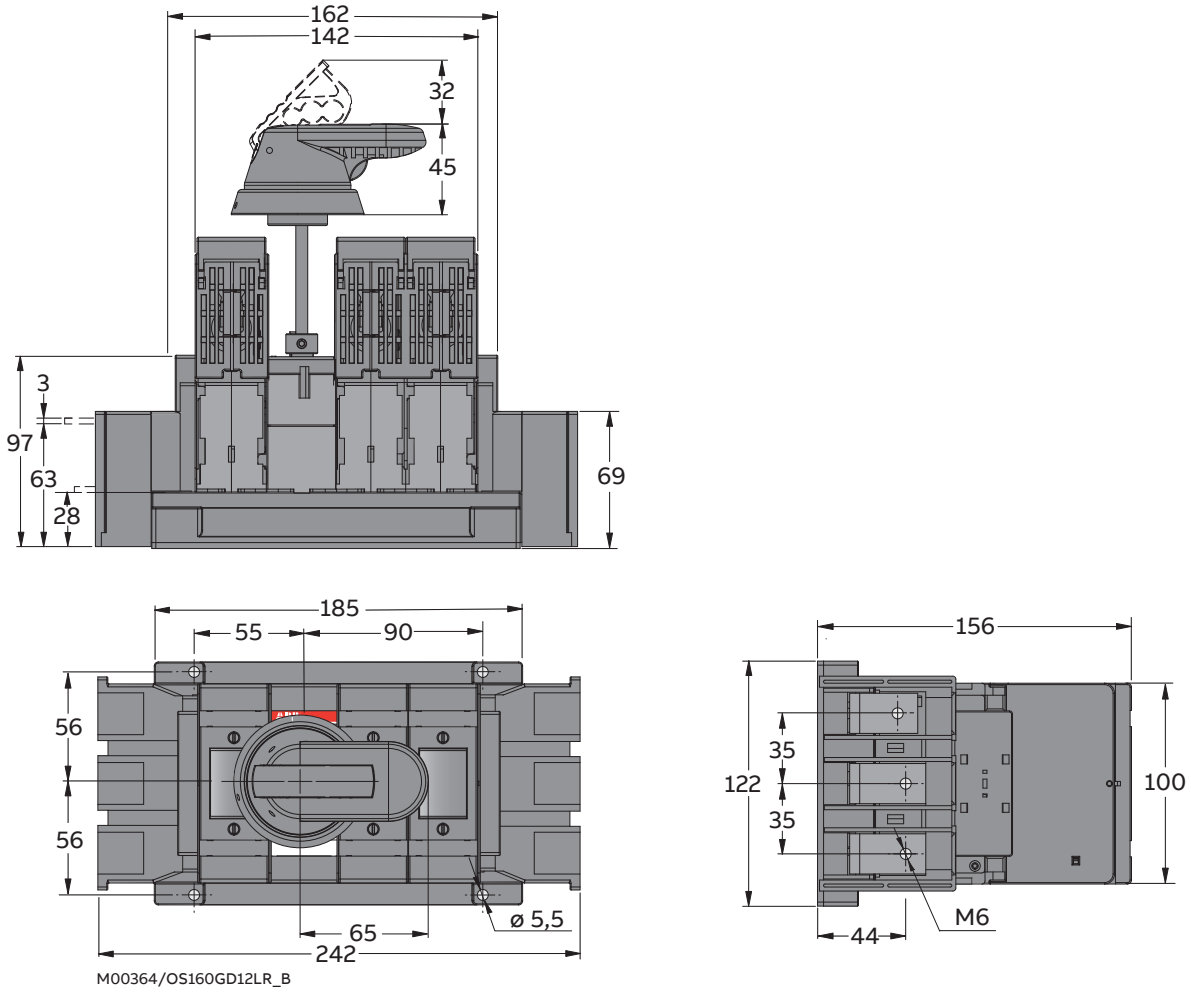

M00364/OS160GD12LR_B

Special connected switch fuses

Dimensional drawings

OS125G...160GD21LR (LR)

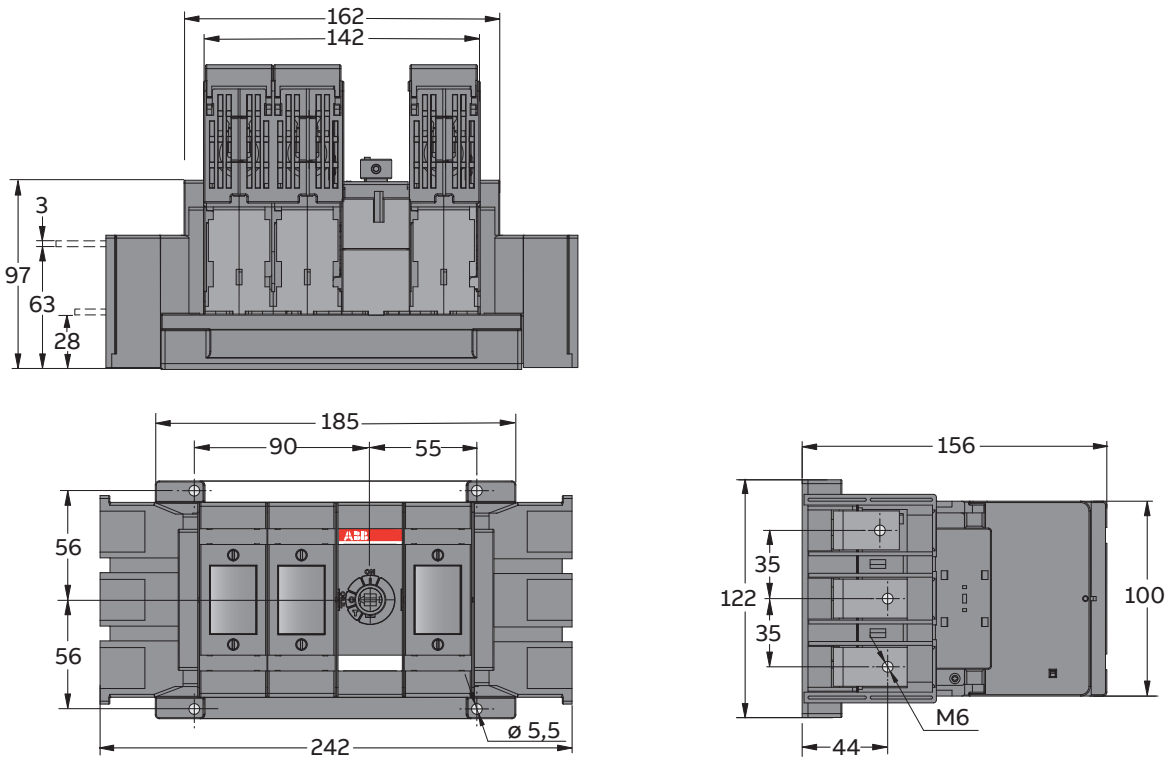

M00365/OS160GD21LR_A

Special connected switch fuses

Dimensional drawings

OS125G...160GD22LR (LR)

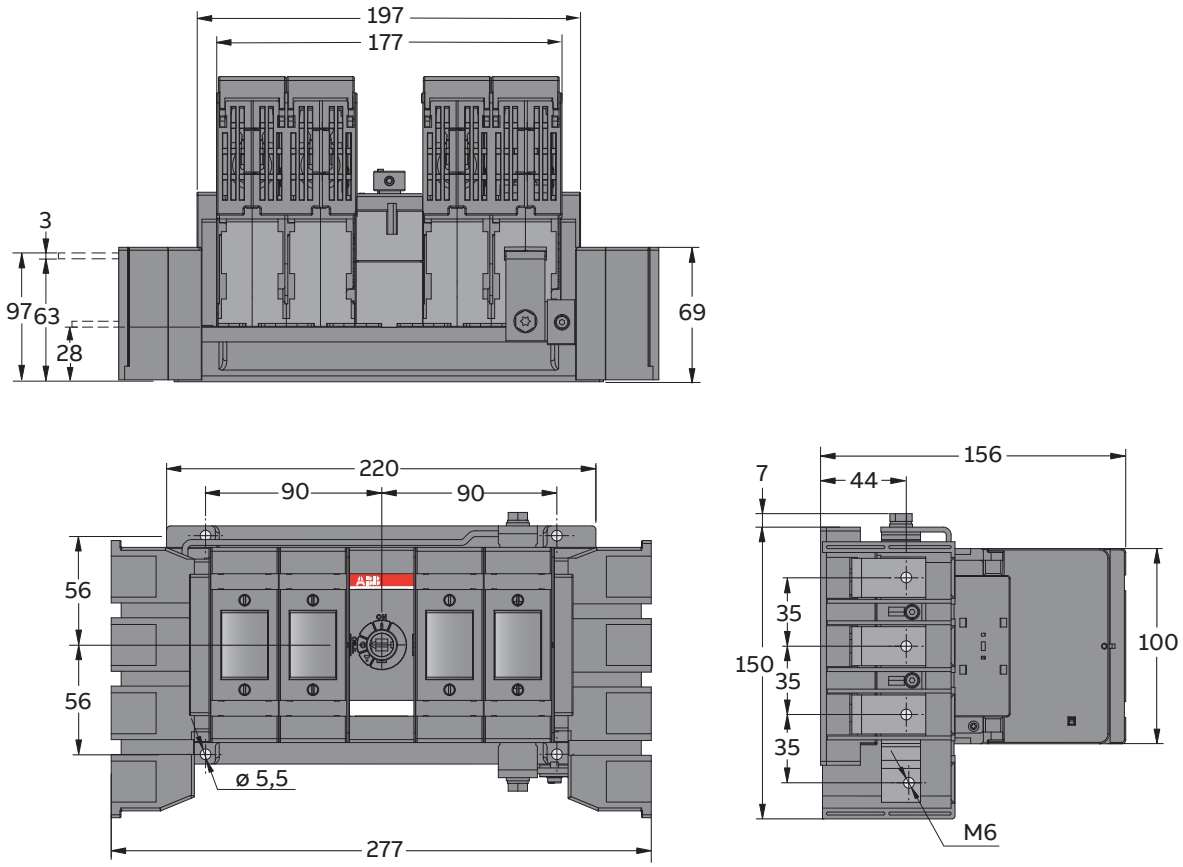

Special connected switch fuses

Dimensional drawings

OS125G...160GB12LR (LR)

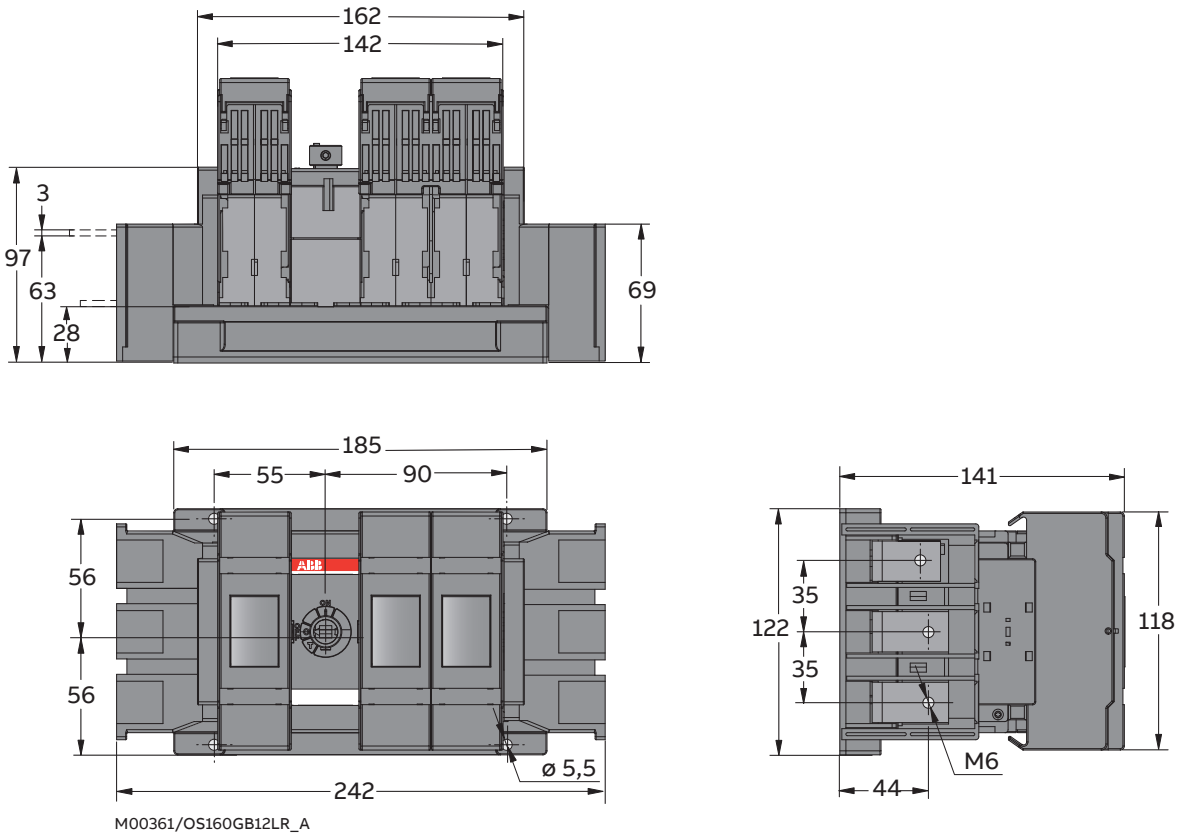

M00361/OS160GB12LR_A

Special connected switch fuses

Dimensional drawings

OS125G...160G_21LR + OSS160G$^{G}_{T}$3LS

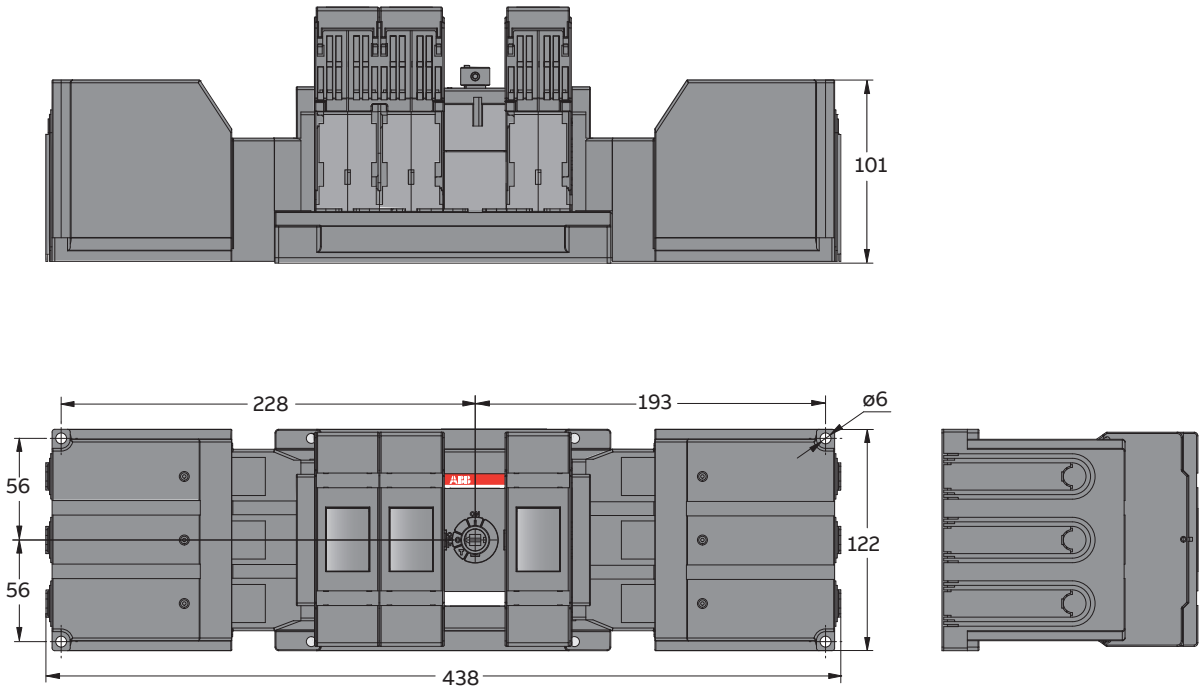

Special connected switch fuses

Dimensional drawings

OS125G...160G_22LR + OSS160G$^{G}_{T}$4LS

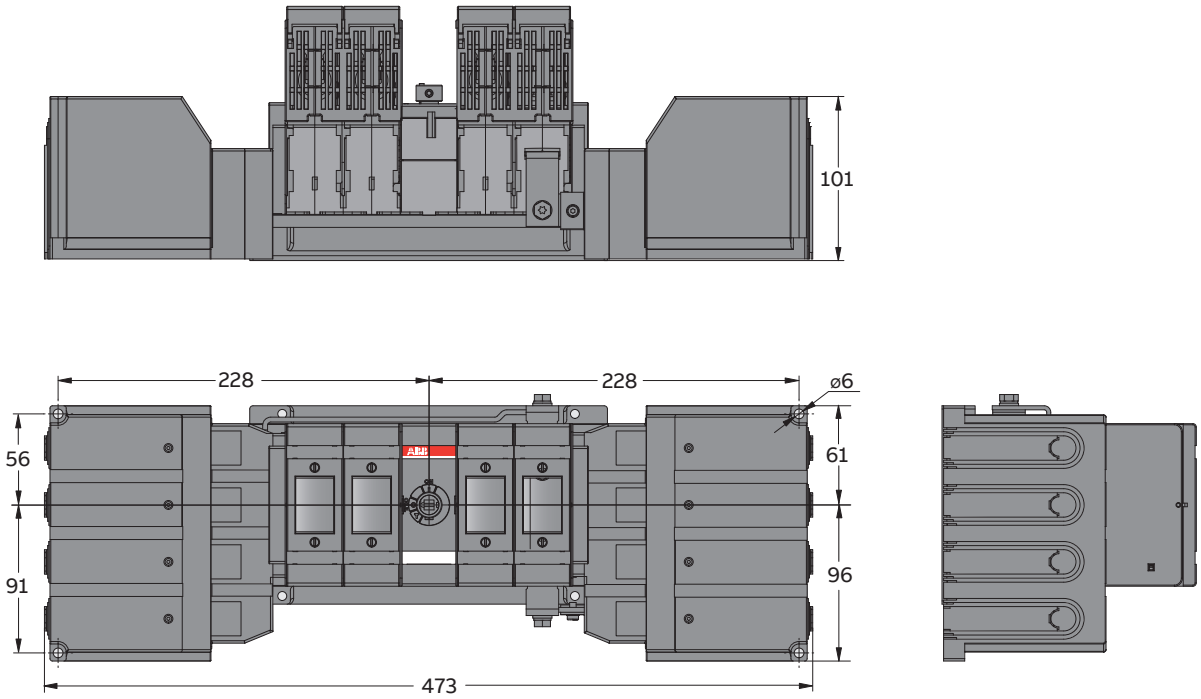

Special connected switch fuses

Dimensional drawings

OS200B12_ and OS250_12_ (LR)

OS200B...250_LR, 3-pole
OS200B12LR
OS250B12LR
OS250D12LR

M00120/OS250_12BL-BR B/
M07026

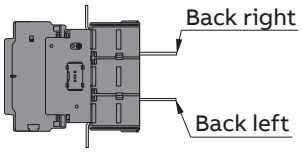

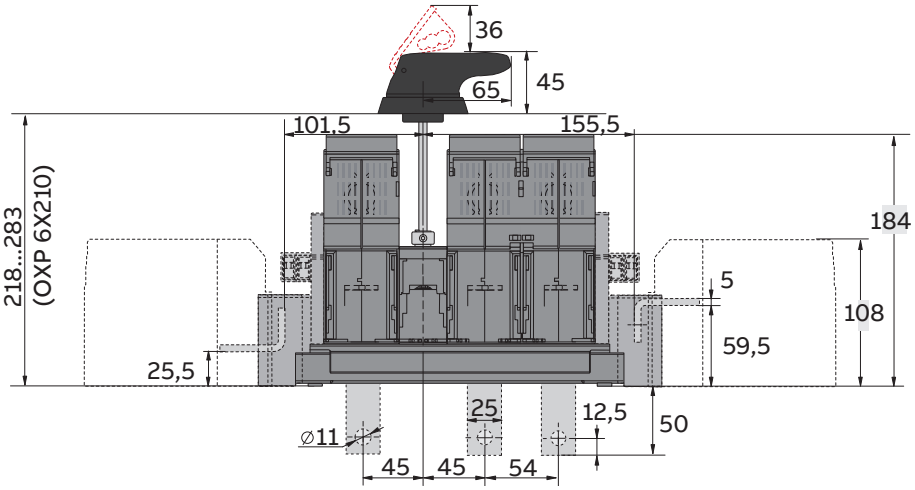

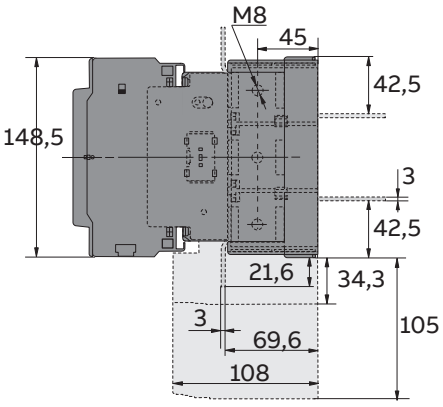

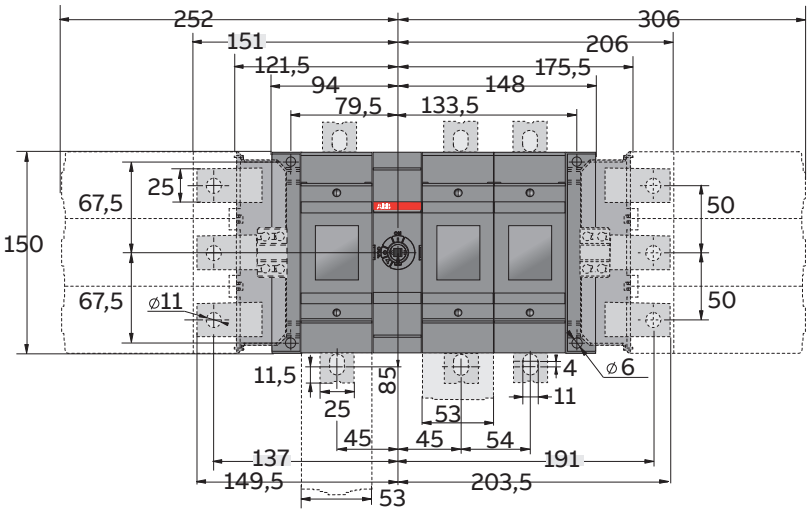

Special connected switch fuses

Dimensional drawings

OS200B21_ and OS250_21_ (LR)

OS200B...250_LR, 3-pole
OS200B21LR
OS250B21LR
OS250D21LR

M00119/OS250_21BD-BR B/
M07027

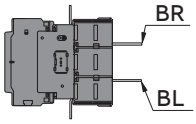

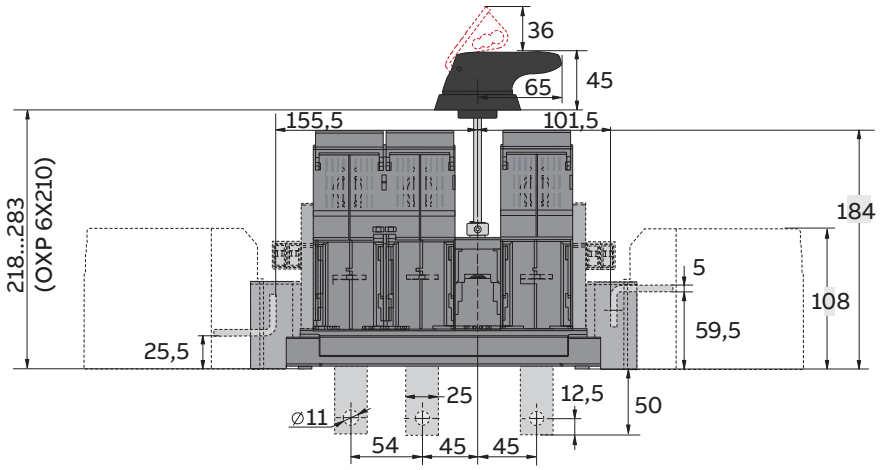

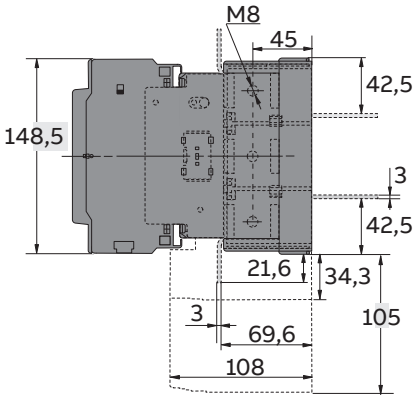

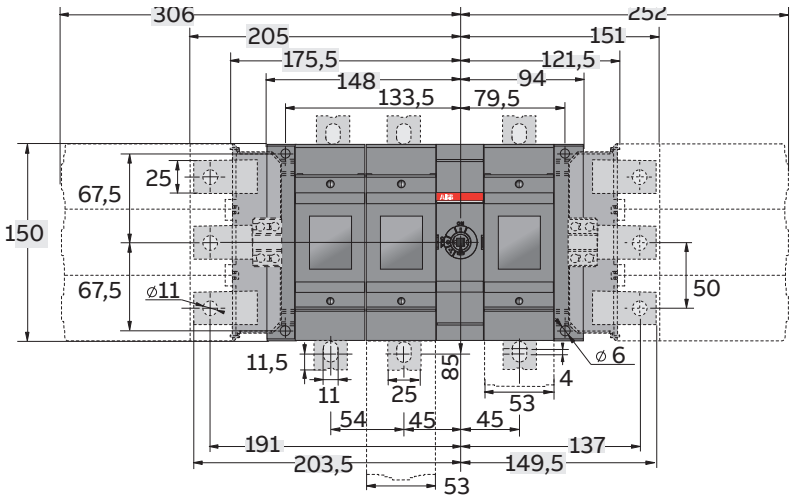

Special connected switch fuses

Dimensional drawings

OS315B12_ and OS400_12_ (LR)

OS315B...400_LR		
	A	B
OS315B12LR	201	194
OS400B12LR	201	194
OS400D12LR	218	166

M00130/OS400_12BL-BR C/M070028

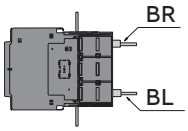

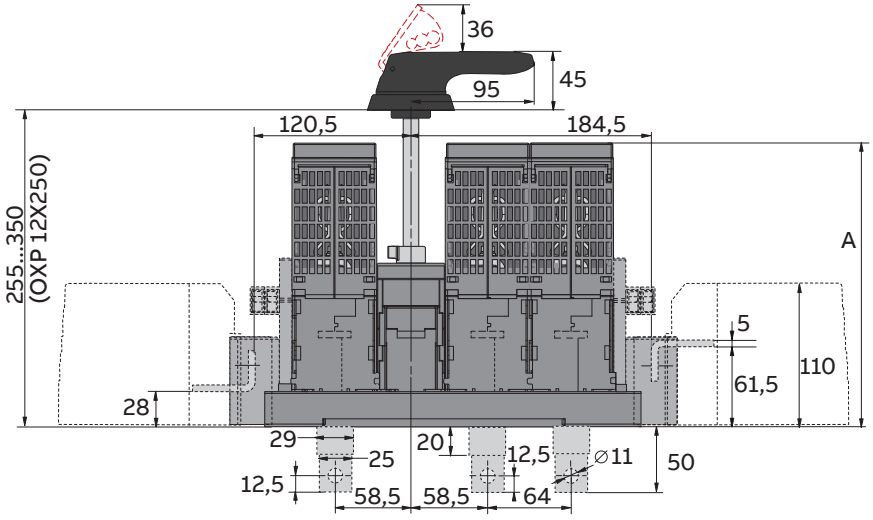

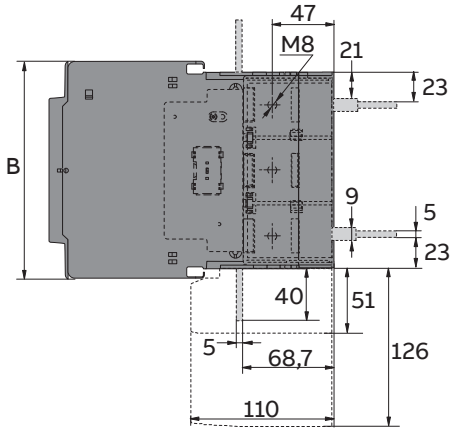

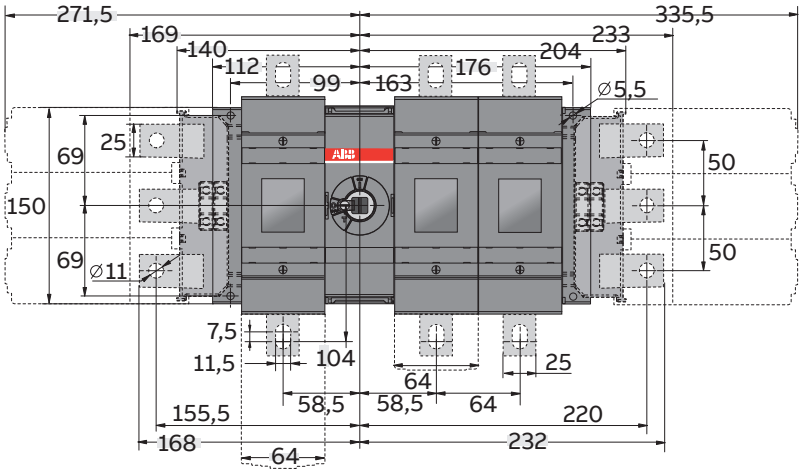

Special connected switch fuses

Dimensional drawings

OS315B21_ and OS400_21_ (LR)

OS315B...400_LR		
	A	B
OS315B21LR	201	194
OS400B21LR	201	194
OS400D21LR	218	166

M00127/OS400_21BL-BR C/M070029

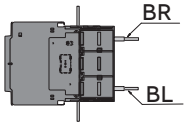

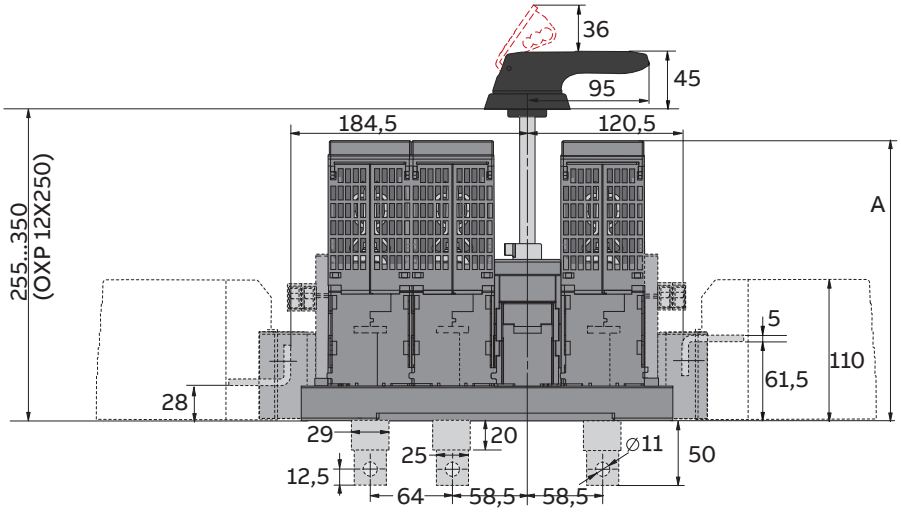

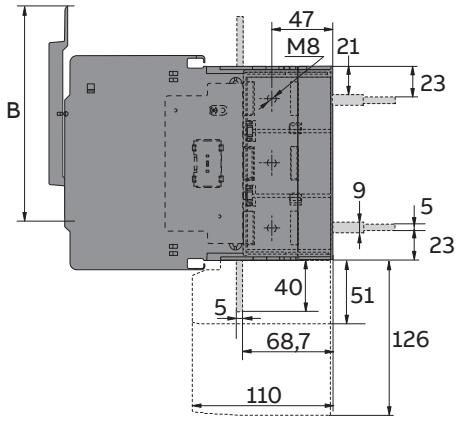

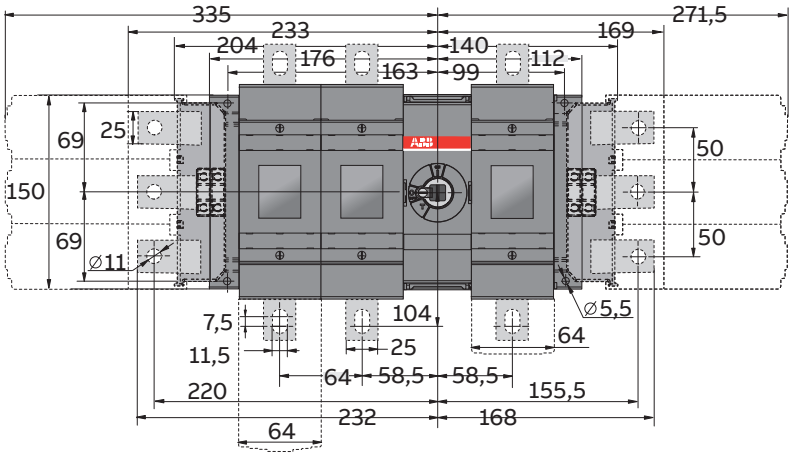

Special connected switch fuses

Dimensional drawings

OS315B22_N2 and OS400_22_N2 (LR)

OS315B...400_LR		
	A	B
OS315B22LR	201	194
OS400B22LR	201	194
OS400D22LR	218	166

M00126/OS400_22BL-BRN2 C/M07030

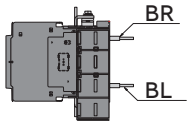

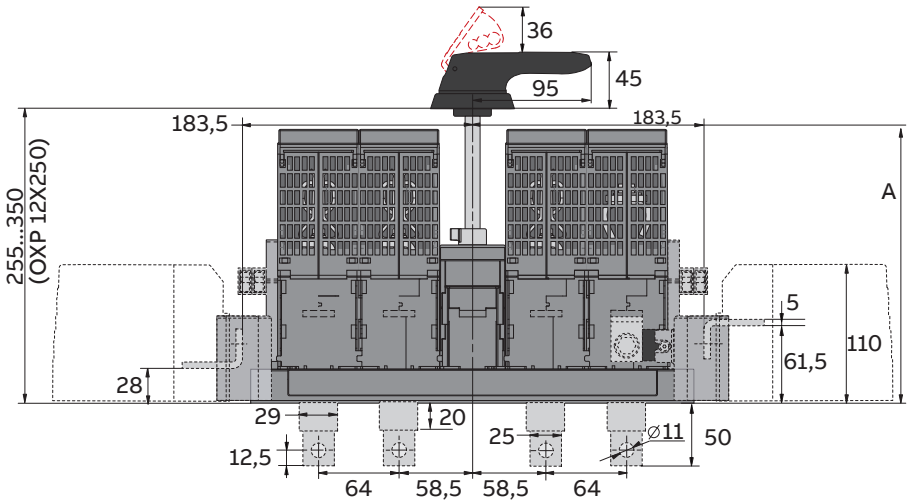

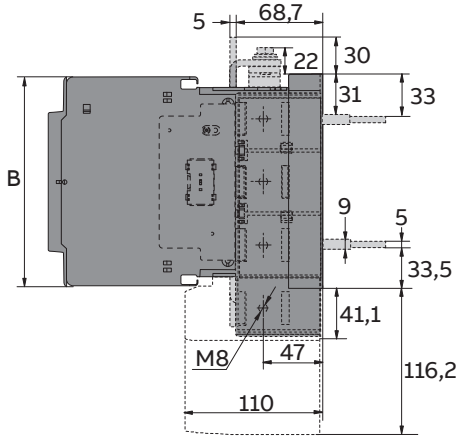

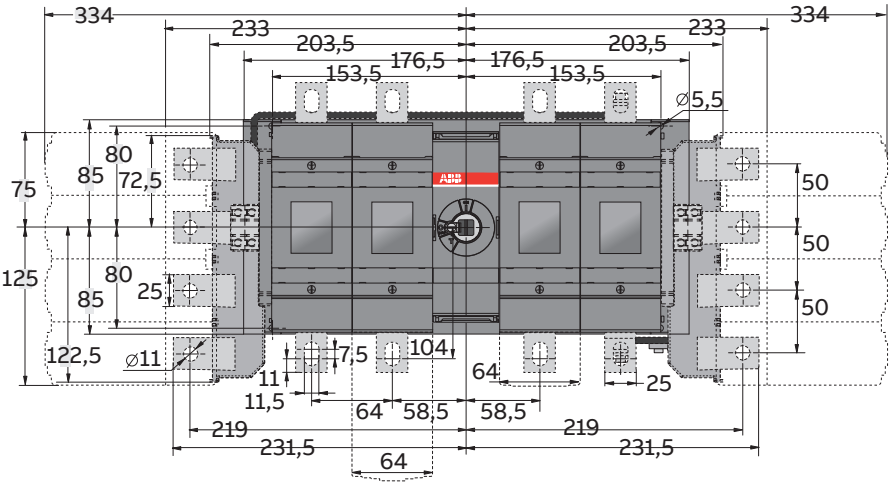

Motorized switch fuses

Dimensional drawings

OSM32...63_M_

OSM32-63_M_				
[mm]	**D3**	**D4**	**B3**	**B4**
A	23,5	23,5	23,5	23,5
A1	122	122	122	122
A2	187,5	211	187,5	211
B	229	252,5	229	252,5
C	100	100	100	100
D	136,5	136,5	124,5	124,5

M00293/OSM32-63-M A

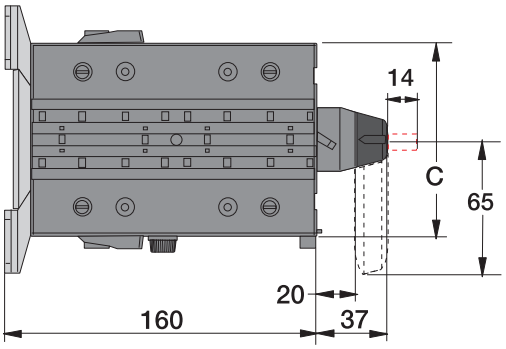

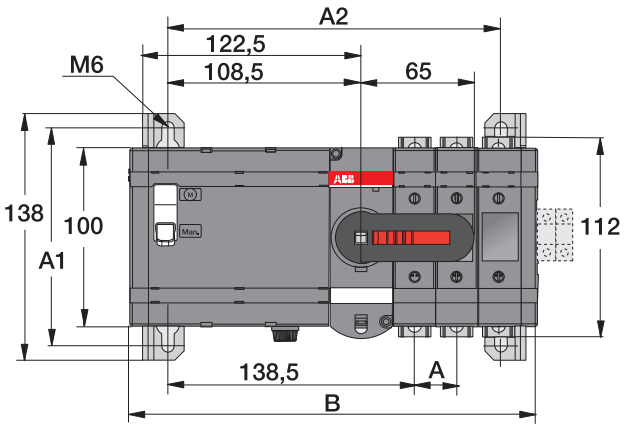

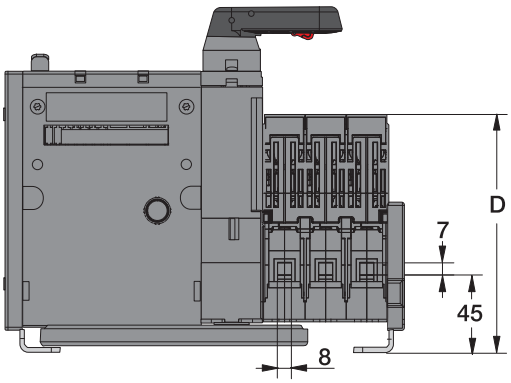

Motorized switch fuses

Dimensional drawings

OSM100...160_M_

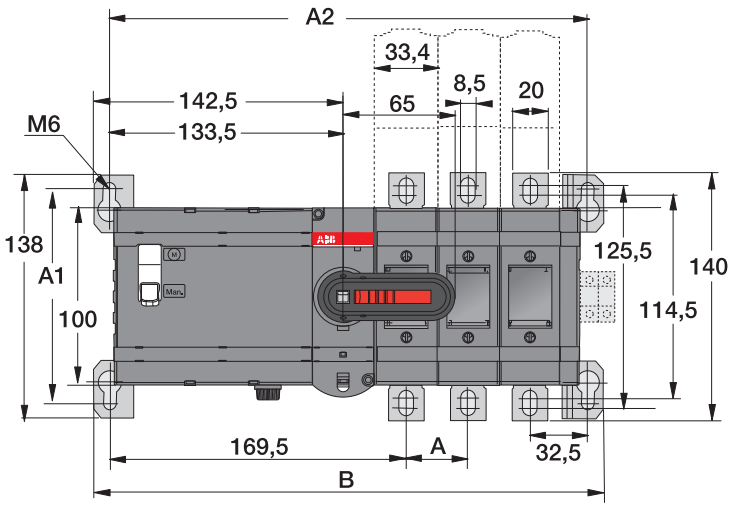

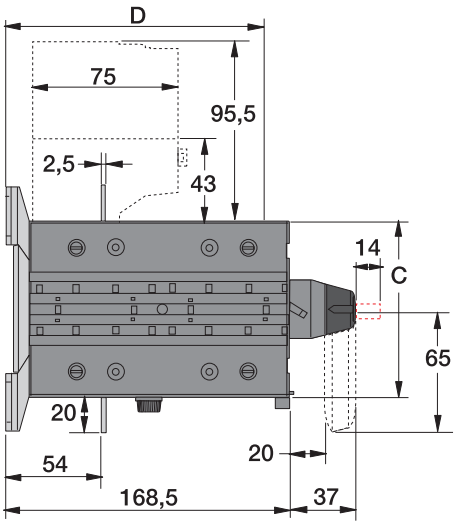

OSM100-160_M-				
[mm]	**D/F3**	**D/F4**	**B3**	**B4**
A	35	35	35	35
A1	122	122	122	122
A2	272	307	272	307
B	290	325	290	325
C	100	100	118	188
D	146	146	130,5	130,5

M00294/OSM100-160-M A

Motorized switch fuses

Dimensional drawings

OSM200_M_

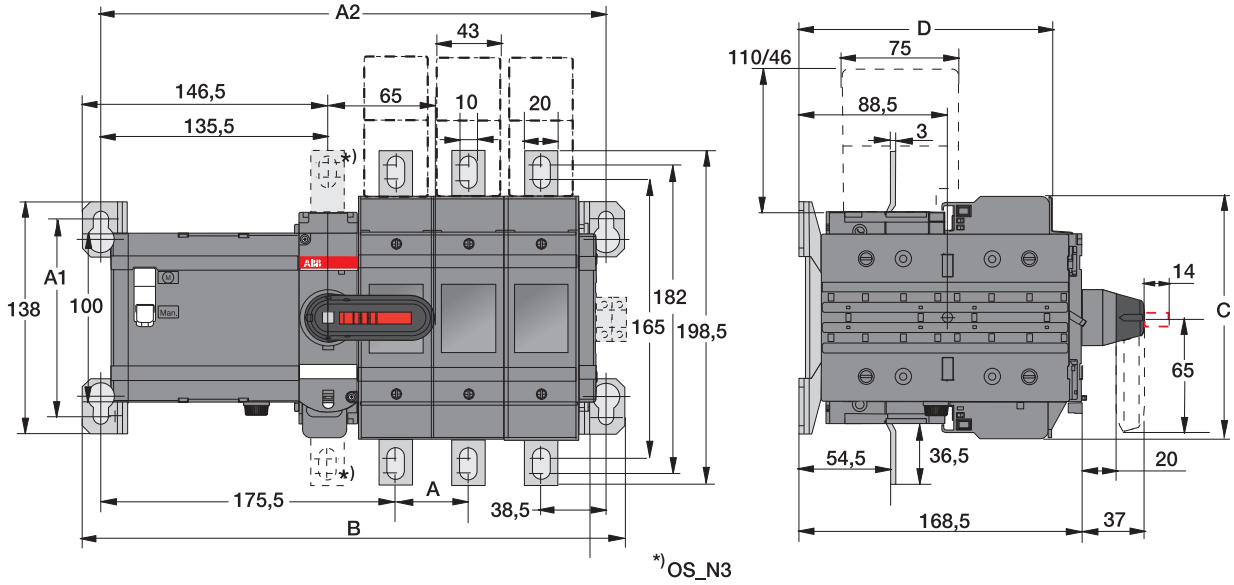

OSM200_M_				
[mm]	B3	B4	D3	D4
A	43,5	43,5	43,5	43,5
A1	118	118	118	118
A2	301,5	345	301,5	345
B	323,5	367	323,5	367
C	144,5	144,5	144,5	144,5
D	132	132	151	151

M001997 OSM200-M B

Motorized switch fuses

Dimensional drawings

OSM250_M_

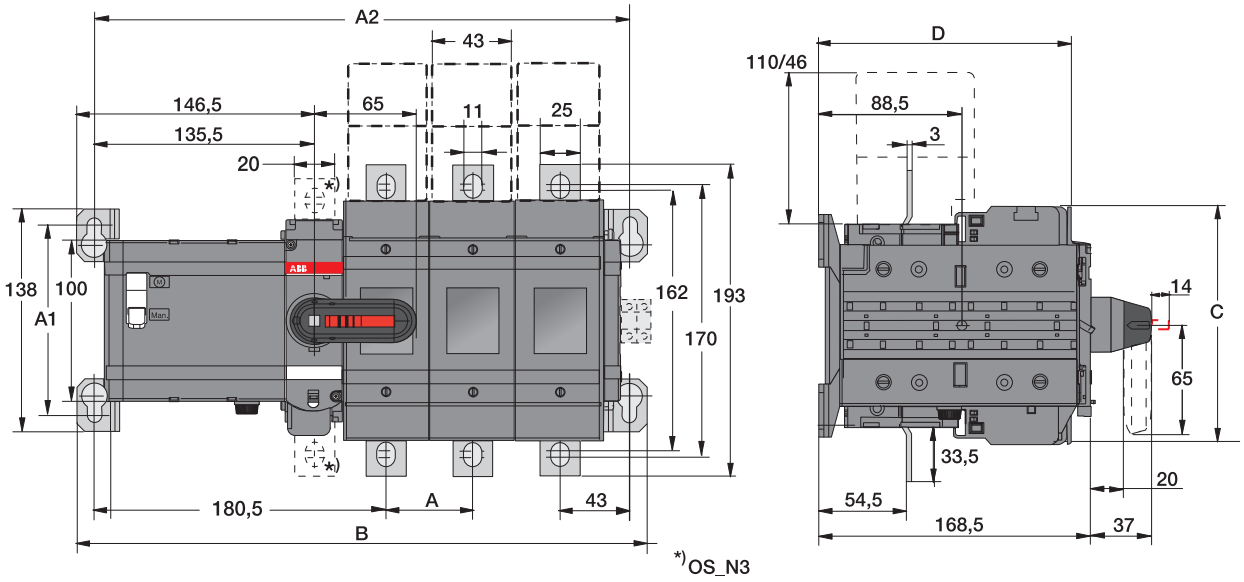

OSM250_M_		
[mm]	**D3/B3**	**D4/B4**
A	54	54
A1	118	118
A2	332	386
B	354	408
C	148,5	148,5
D	156	156

M00198 / OSM250-M B

Motorized switch fuses

Dimensional drawings

OSM315...400_M_

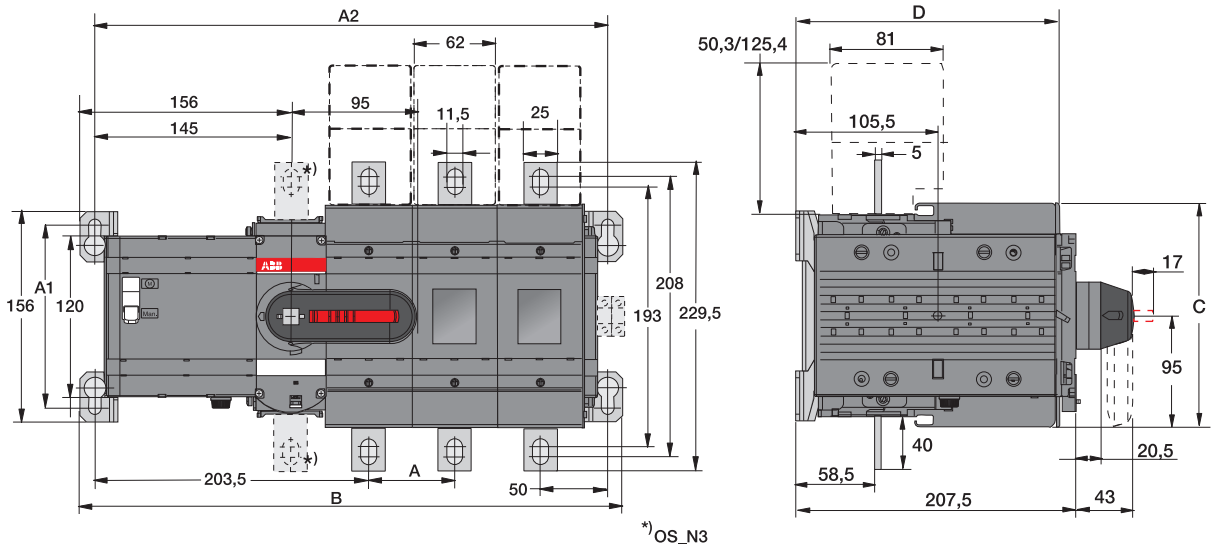

OSM315_M_		
[mm]	**B3**	**B4**
A	64	64
A1	136	136
A2	382	446
B	404	468
C	194	194
D	178,5	178,5

OSM400_M_				
[mm]	**B3**	**B4**	**D3**	**D4**
A	64	64	64	64
A1	136	136	136	136
A2	382	446	382	446
B	404	468	404	468
C	194	194	166	166
D	178,5	178,5	196,5	196,5

Motorized switch fuses

Dimensional drawings

OSM630...800_M_

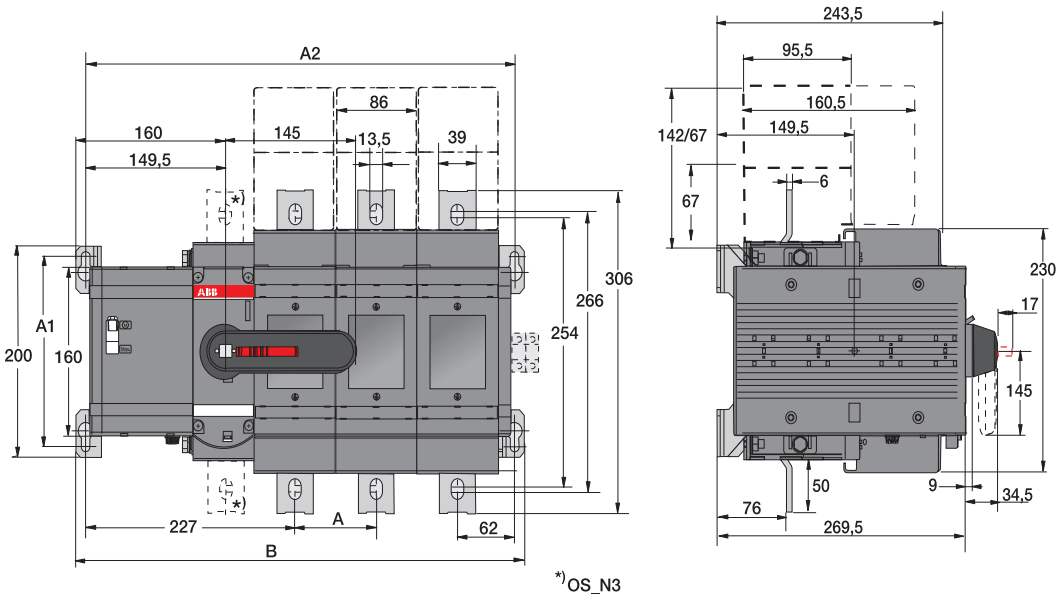

OSM630-800_M_		
[mm]	**D3/B3**	**D4/B4**
A	88	88
A1	180	180
A2	465,5	553,5
B	486,5	574,5

M00206 / OSM639-800-M B

Motorized switch fuses

Dimensional drawings

OSM1250_M_

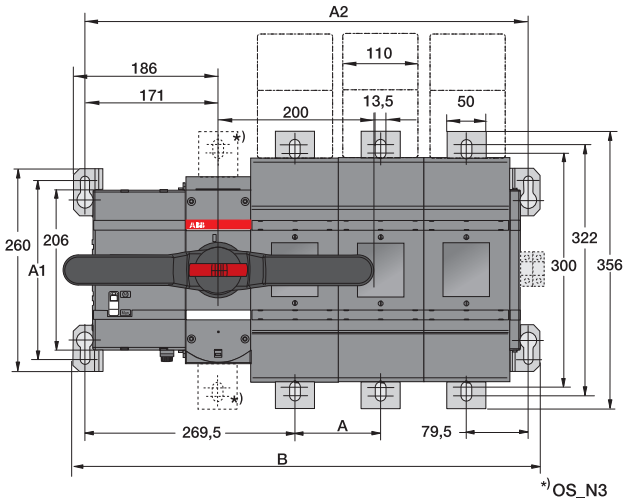

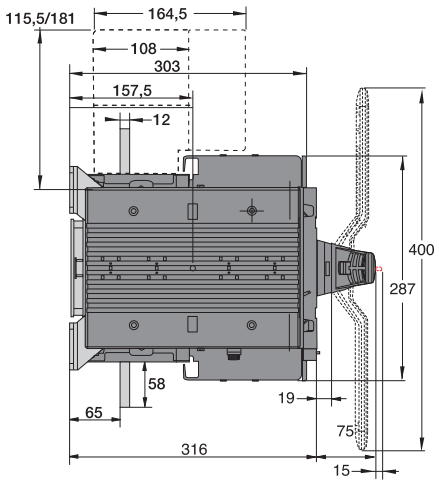

OSM1250_M_		
[mm]	**B3/D3**	**B4/D4**
A	110	110
A1	230	230
A2	569,5	679,5
B	599,5	709,5

M00238 / OSM1250-M C

Accessories for switch fuses 20...1250 A

Dimensional drawings for handles

Plastic handles

Handle type [mm]	Shaft diameter B	Length L
OH_45J6	6	45
OH_65J6	6	65
OH_95J12	12	95
OH_125J12	12	125
OH_145J12	12	145
OH_175J12	12	175
OH_275J12	12	275

Handle type [mm]	Length L
OH_274J12	274
OH_330J12	330

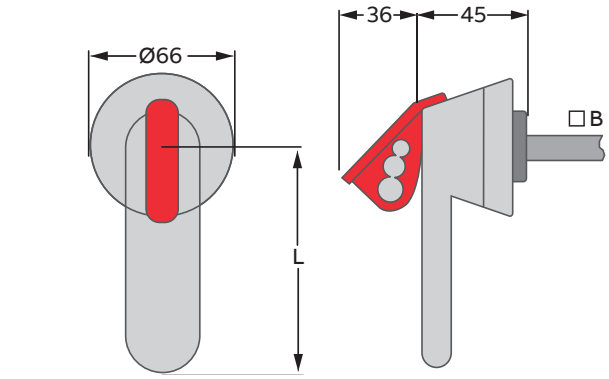

Door drilling for OH_ handles:

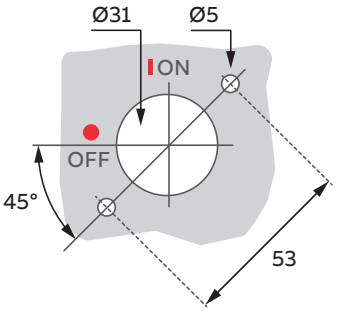

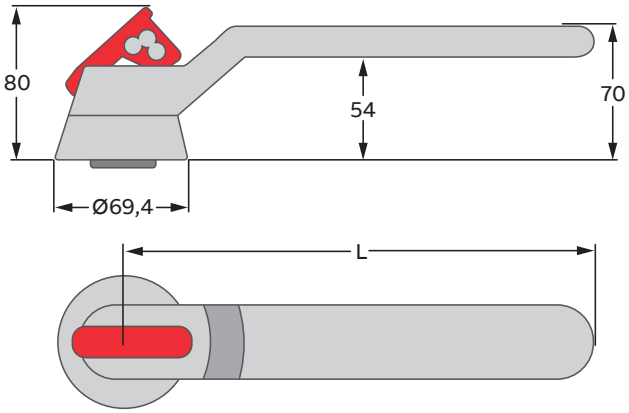

Plastic handles, type OHB

Handle type [mm]	Length L
OHB150J12P	300
OHB200J12P	400

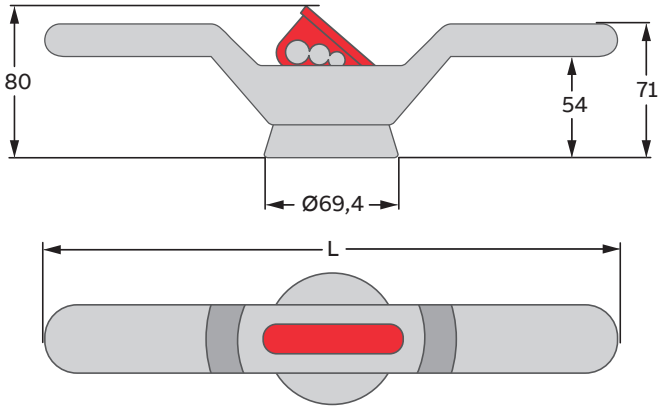

Door drilling for OHB_ handles:

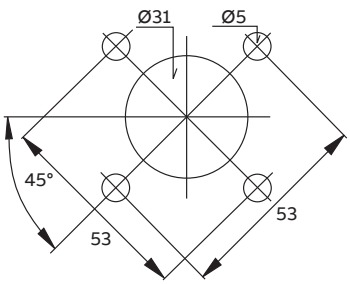

Accessories for switch fuses 20...1250 A

Dimensional drawings for handles

Stainless steel handles

Handle type	B shaft diameter [mm]	Lenght L [mm]
OHM45L6	6	45
OHM65L6	6	65
OHM125L12	12	125
OHM175L12	12	175
OHM275L12	12	275

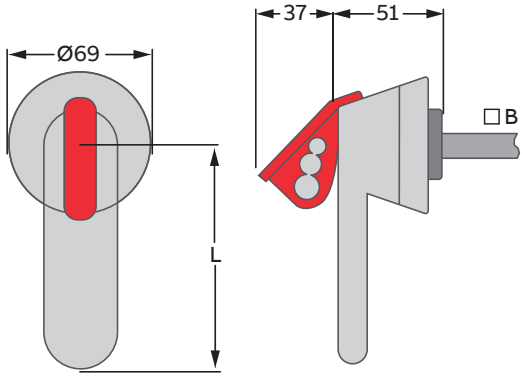

Door drilling for OHM_ handles:

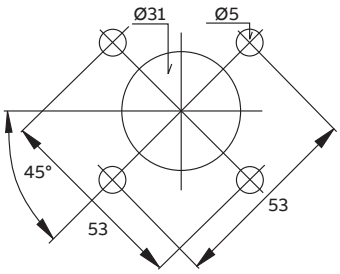

Minimum distance L between the hinge and the rotating shaft

Sizes [A]	Length L [mm]	Handle type
30...250	60	OH_65J6
315...400	95	OH_95J12
630...800	150	OH_125J12, OH_145J12
630...800	175	OH_175J12
630...800	275	OH_275J12
1200...1250	274	OH_274J12
1200...1250	330	OH_330J12

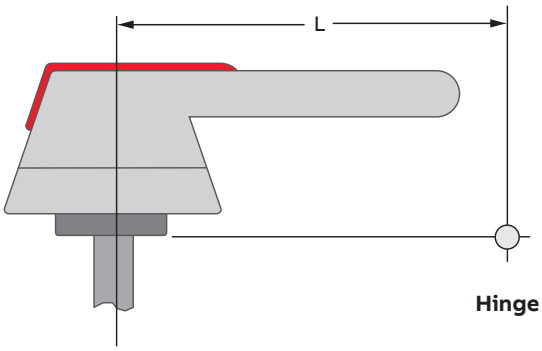

Accessories for switch fuses 20...1250 A

Dimensional drawings for handles

Plastic handles

Handle type [mm]	Shaft diameter B	Length L
OH_45J6	6	45
OH_65J6	6	65
OH_80J6	6	80

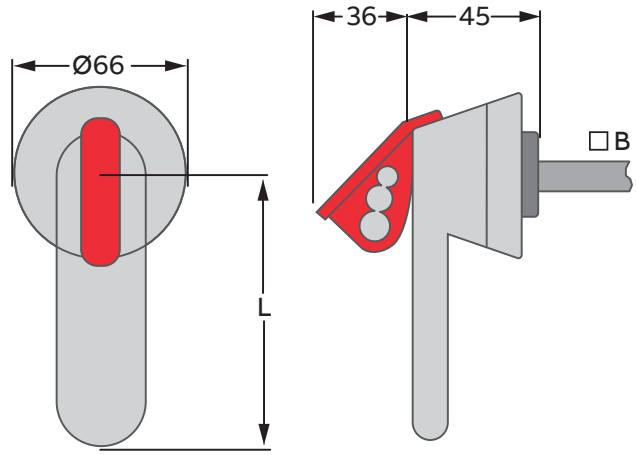

Door drilling for OHM_ handles:

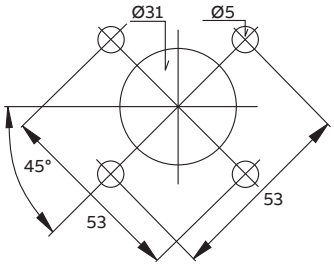

Minimum distance L between the hinge and the rotating shaft

Sizes [A]	Length L [mm]	Handle type
30...250	60	OH_65J6

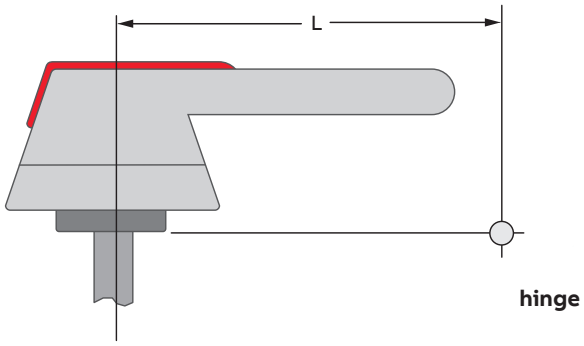

Accessories for switch fuses 20...1250 A

Dimensional drawings for conversion kits

6 and 8-pole switch fuses

OESAZW2

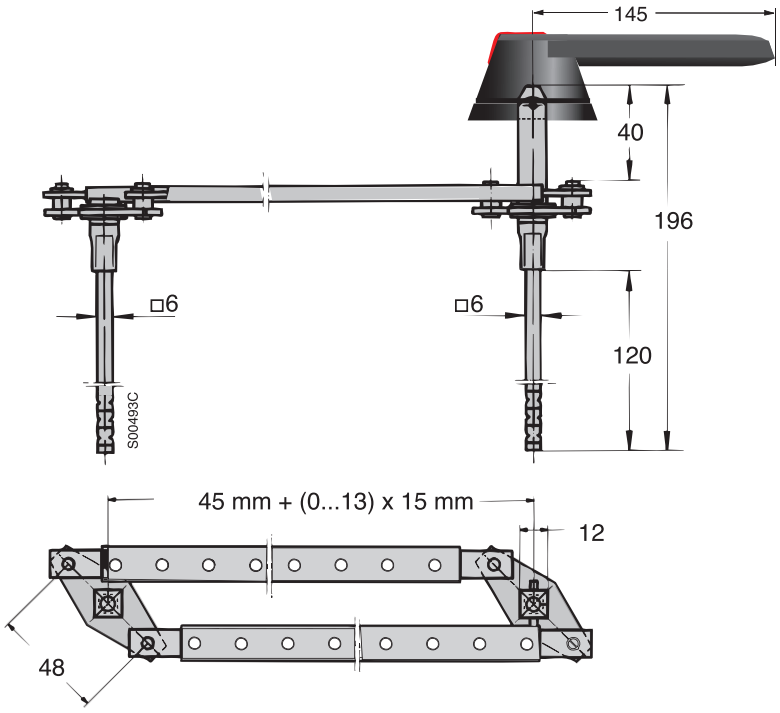

OETLZW9



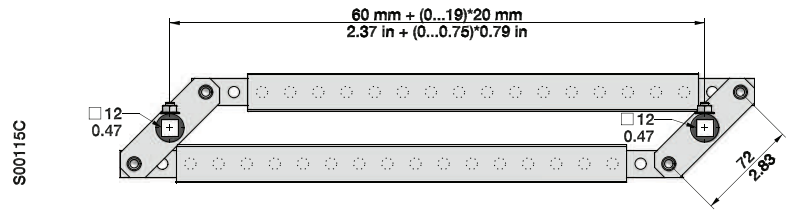

Accessories for switch fuses 20...1250 A

Dimensional drawings for conversion kits

Change-over switch fuses

OETLZW11

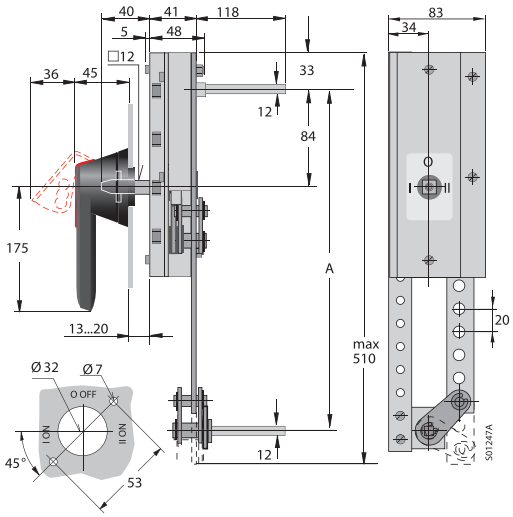

OFTLZW11	
A	210+(0...11)x20mm

OETLZW12

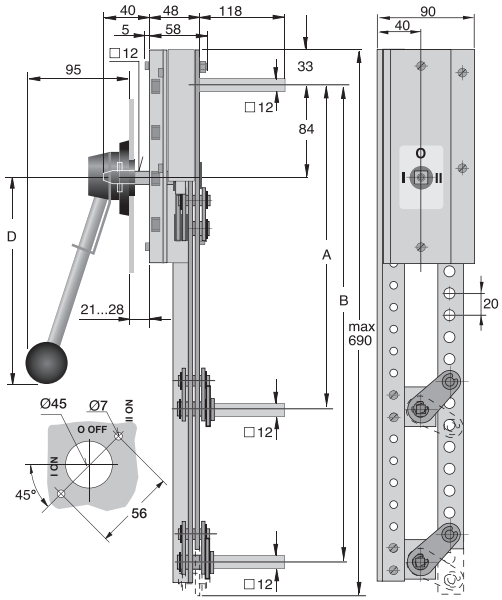

OFTLZW12	
A	210+(0...18)x20mm
D	220mm

OTZW 25

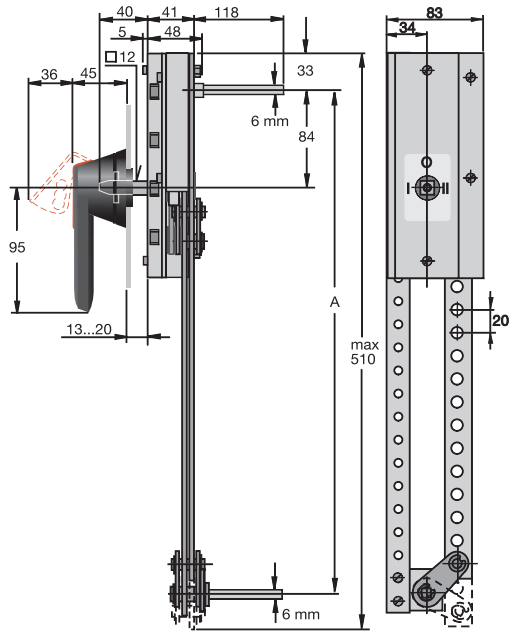

OTZW25	
A	210+(0...18)x20mm

Accessories for switch fuses 20...1250 A

Dimensional drawings for conversion kits

By-pass switch fuses

OETLZW13

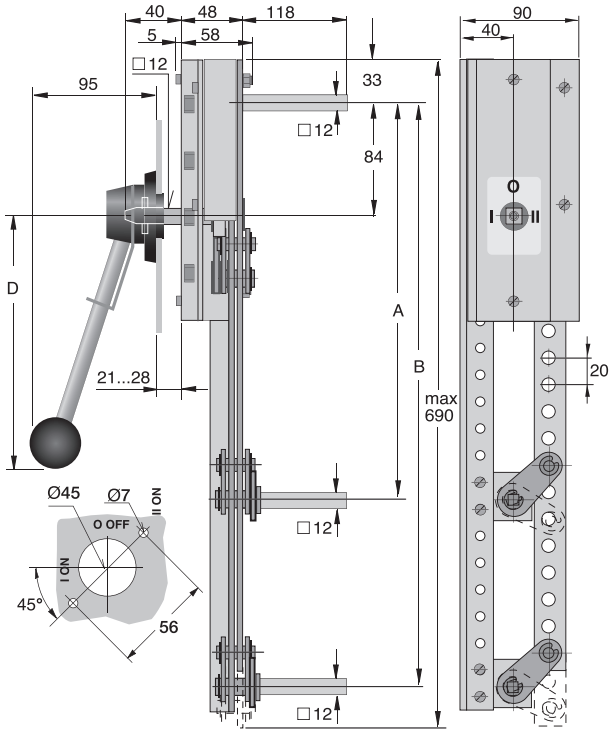

OETLZW13
A
B
D

OTZW26

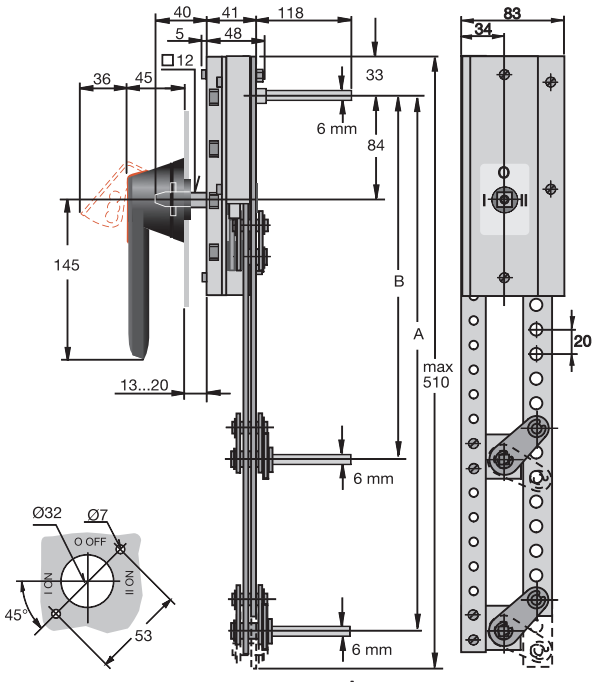

OTZW26	
A	210+(0...9)x20mm
B	210+(0...9)x20mm

Accessories for switch fuses 20...1250 A

Dimensional drawings for conversion kits

Mechanical interlock

OTZW10

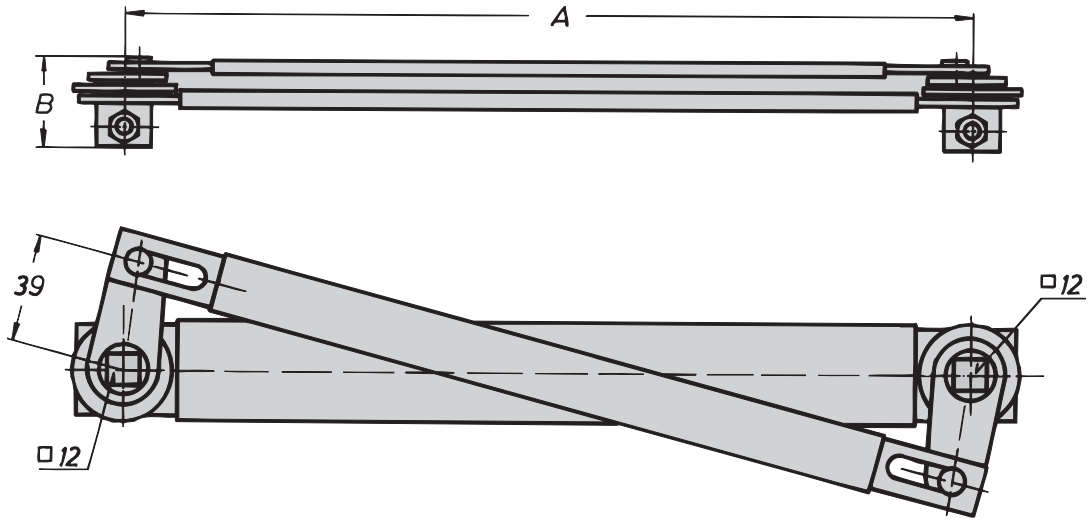

OETLZX3, 14, 15			
	OETLZW3	OETLZW14	OETLZW15
A	300	250	500
B	31	31	36

OTZW10

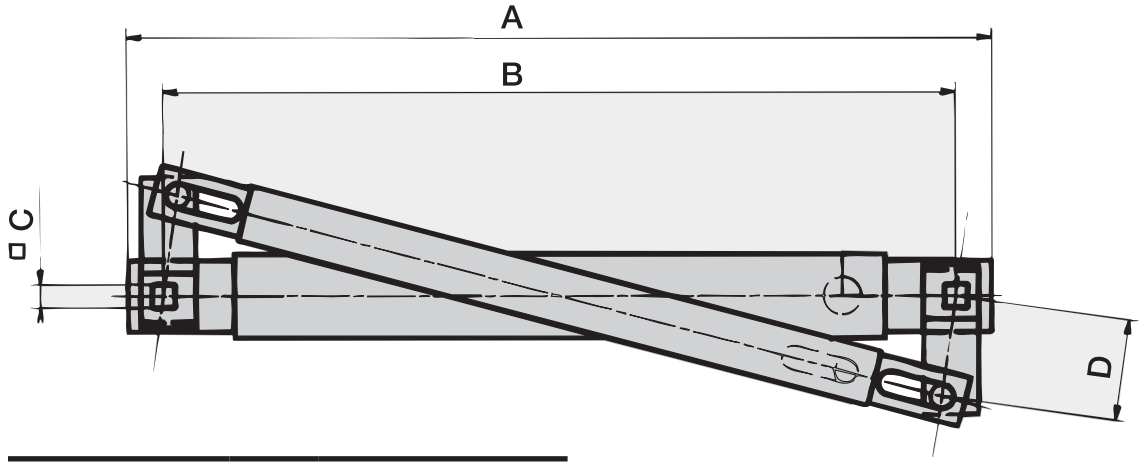

OTZW10	
A	206
B	190
C	6
D	30


A10
A12
A13
A14
A15
A16
88:88
源自广东万绿湖
天然弱碱性水

Switch fuses
Additional resources

Webpage: Manual operated switch fuses
Homepage for Manual operated switch fuses.

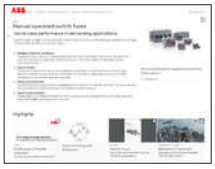

Webpage: Motorized switch fuses
Homepage for Motorized switch fuses.



Catalog: Switch fuses
Switch fuses -catalog with complete ordering information.



Catalog: Fuse links
Fuse links -catalog with complete ordering information.



Coordination tables
Test proven type 2 coordination tables where you can easily select the appropriate ABB components for motor starting and protection.



Video
World class performance in the most demanding applications.



Blog
What's inside counts.



Customer case: Pogliano
Supplying busbar trunking systems to the world.



—

ABB

Find the address of your local sales organization
on the ABB homepage:

www.abb.com/contacts

> Low Voltage Products and Systems

Note: We reserve the right to make technical changes or modify the contents of this document without prior notice. With regard to purchase orders, the agreed particulars shall prevail. ABB does not accept any responsibility whatsoever for potential errors or possible lack of information in this document.

We reserve all rights in this document and in
the subject matter and illustrations contained therein. Any reproduction, disclosure to third parties or utilization of its contents – in whole or in parts – is forbidden without prior written consent of ABB.







© Copyright 2022 ABB. All rights reserved.
Specifications subject to change without notice.

OSIGB 22-09, 1SCC311013C0201