SOLENOID VALVES

direct operated
for high pressure fluids
1/4

NC 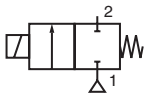

NO 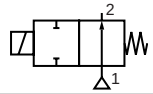

2/2
Series
262

FEATURES

- *Valves do not require a minimum operating pressure and have a high operating pressure as indicated*
- *Valves operation is not affected by mounting position*
- *Solenoid valves satisfy all relevant EC directives*



C

GENERAL

Differential pressure	See "SPECIFICATIONS" [1 bar =100 kPa]
Maximum viscosity	65 cSt (mm²/s)
Response time	5 - 25 ms

fluids (∗)	temperature range (TS)	seal materials (∗)
air, inert gas, water, oil	- 20°C to + 90°C - 20°C to + 40°C	NBR (nitrile) UR (cast urethane)

MATERIALS IN CONTACT WITH FLUID

(∗) Ensure that the compatibility of the fluids in contact with the materials is verified-

Body	Brass
Core tube	Stainless steel
Core and plugnut	Stainless steel
Springs	Stainless steel
Seat	Brass
Seal	NBR
Disc	NBR or UR
Disc holder (NO function)	PA
Shading coil	Copper

ELECTRICAL CHARACTERISTICS

Coil insulation class	F
Connector	Spade plug (cable Ø 6-10 mm)
Connector specification	ISO 4400 / EN 175301-803, form A
Electrical safety	IEC 335
Electrical enclosure protection	Moulded IP65 (EN 60529)
Standard voltages	DC (=) : 24V - 48V
(Other voltages and 60 Hz on request)	AC (~) : 24V - 48V - 115V - 230V / 50 Hz

prefix option	power ratings: inrush ~ (VA)	holding ~ (VA)	holding ~ (W)	hot/cold = (W)	operator ambient temperature range (TS) (C°)	replacement coil ~ 230 V/50 Hz	replacement coil = 24 V DC	type (1)
SC	34	15,6	6	7 / 9,7	-20 to + 75	400325-117	400325-142	01
	30	22,5	9	9,5/15,3	-20 to + 50	400325-217	400325-242	01
	55	23	10,5	9/11,2	-20 to + 75	400425-117	400425-142	02
	78	35	16,7	-	-20 to + 50	400425-217	-	02
	-	-	-	14/19,7	-20 to +25	-	400425-342	02

(1) Refer to the dimensional drawings on the following page.

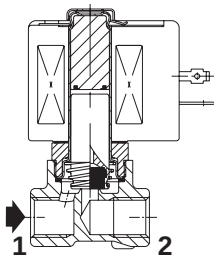

NC function

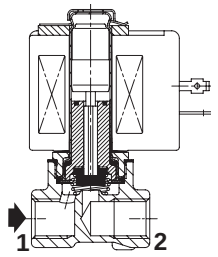

NO function

SPECIFICATIONS

pipe size	orifice size	flow coefficient Kv		operating pressure differential (bar) min.	max. (PS) air (∗)		water (∗)		oil (∗)		power coil (W)		catalogue number	maintained man. operator	FPM	EPDM	CR	PTFE
G	(mm)	(m³/h)	(l/min)		~	=	~	=	~	=	~	=	~/=					
NC - Normally closed, NBR seal and disc																		
1/4	1,2	0,05	0,8	0	50	35	50	35	35	35	6	9,7	**SCG262C019**	-	V	E	J	T
	2,4	0,17	2,8	0	25	10	25	8	11	8	6	9,7	**SCG262C020**	-	V	E	J	T
					35	15	35	10	20	10	9	15,3	**SCG262C021**	-	V	E	J	T
	3,2	0,3	5	0	9	4	11	4	6	4	6	9,7	**SCG262C022**	MO	V	E	J	T
					15	7	16	6	11	6	9	15,3	**SCG262C023**	MO	V	E	J	T
					20	5	20	4	13	4	10,5	11,2	**SCG262D232**	MO	V	E	J	T
	4	0,43	7,2	0	12	2,5	13	2,5	10	3	10,5	11,2	**SCG262C202**	MO	V	E	J	T
	5,6	0,62	10,3	0	6,5	1,7	6,5	1,7	6,5	1,7	10,5	11,2	**SCG262C208**	MO	V	E	J	T
		0,73	12,2	0	2,5	1,2	3,0	1,3	2,5	1,3	6	9,7	**SCG262C013**	MO	V	E	J	T
	7,1	0,82	13,7	0	1,8	1	2,5	1	1,9	1	6	9,7	**SCG262C090**	MO	V	E	J	T
		0,75	12,5	0	4	1,2	5	1	4	1,2	10,5	11,2	**SCG262C210**	MO	V	E	J	T
					6	1,7	6,5	1,3	6	1,3	16,7	19,7	**SCG262B212**	-	V	E	J	T
NC - Normally closed, NBR seal and UR disc																		
1/4	1,2	0,05	0,8	0	100	32	100	32	75	30	10,5	11,2	**SCG262D200**	MO	-	-	-	T
NO - Normally open, NBR seal and disc																		
1/4	3,2	0,3	5	0	9	5,5	7	4	6,5	4	10,5	11,2	**SCG262A262**	-	V	E	J	T
	4	0,43	7,2	0	5,5	3	5	2	4	2	10,5	11,2	**SCG262A263**	-	V	E	J	T
	5,6	0,73	12,2	0	3	1,7	2,5	1,3	2,5	1,3	10,5	11,2	**SCG262A264**	-	V	E	J	T
	7,1	0,82	13,7	0	2	1	1,7	1	1,3	1	10,5	11,2	**SCG262A265**	-	V	E	J	T
NO - Normally open, NBR seal and UR disc																		
1/4	1,2	0,05	0,8	0	50	35	50	45	50	50	10,5	11,2	**SCG262A260**	-	-	-	-	T
	2,4	0,17	2,8	0	20	13	20	10	10	9	10,5	11,2	**SCG262A261**	-	-	-	-	T

00031GB-2006/R01
Availability, design and specifications are subject to change without notice. All rights reserved.

All leaflets are available on: **www.ascojoucomatic.com**

OPTIONS

- Valves can also be supplied with FPM (fluoroelastomer), EPDM (ethylene-propylene), CR (chloroprene) and PTFE seals and discs. Use the appropriate optional suffix letter for identification
- Waterproof enclosure with embedded screw terminal coil according to protection class IP67, CEE-10
- Explosionproof enclosures for use in zones 1/21-2/22, categories 2-3 to ATEX Directive 94/9/EC (see “Explosionproof solenoids” section)
- Electrical enclosures according to “NEMA” standards are available
- Compliance with "UL", "CSA" and other local approvals available on request
- Mounting brackets, suffix MB
- Other pipe connections are available on request
- Plug with visual indication and peak voltage suppression or with cable length of 2m (see Solenoids, Coils & Accessories section)

INSTALLATION

- The solenoid valves can be mounted in any position without affecting operation
- Solenoid valves have 2 mounting holes in body
- Pipe connection identifier is G = G (ISO 228/1)
- Installation/maintenance instructions are included with each valve

SPARE PARTS KIT & ACCESSORIES

catalogue number	spare parts kit nº.		mounting bracket nº.
	~	=	
SCG262C013/090	**C302022**	**C302068**	**254573-001**
SCG262C019/020/021/022/023	**C302018**	**C302068**	**-**
SCG262A260/261	**C302045**	**C302076**	**206525-001**
SCG262A262/263/264/265	**C302051**	**C302080**	**254573-001**
SCG262D200	**C304350**	**C304350**	**206525-001**
SCG262C202/208/210	**C304354**	**C304354**	**254573-001**
SCG262B212/D232	**C304354**	**C304354**	**206525-001**

(1) Standard prefixes/suffixes are also applicable to kits.
- Not available.

ORDERING EXAMPLES:

SC G 262 **C** 010 230V / 50 Hz
SC G 262 **C** 020 **MO** 115V / 50 Hz
SC G 262 **C** 022 **V** 24V / DC
SC G 262 **D** 200 **T** 230V / 50 Hz

prefix
pipe thread
basic number
voltage
suffix

ORDERING EXAMPLES KITS:

C302045(1)
C302051 **V**
C302051 **E**

basic number
suffix

DIMENSIONS (mm), WEIGHT (kg)



TYPE 01-02
Prefix "SC" Solenoid
Epoxy moulded
IEC 335 / ISO 4400
IP65

Type 01: SCG262C019/020/021/022/023/013/090
Type 02: SCG262D232/C202/C208/C210/B212/D200



TYPE 02
Prefix "SC" Solenoid
Epoxy moulded
IEC 335 / ISO 4400
IP65

SCG262A262/A263/A264/A265/A260/A261

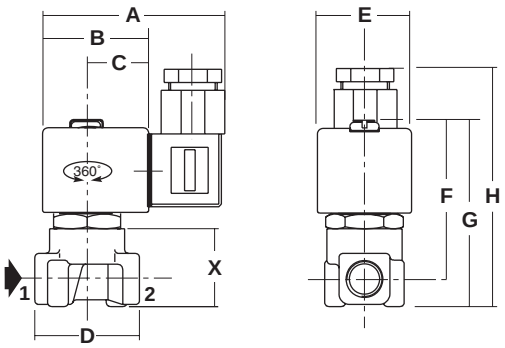

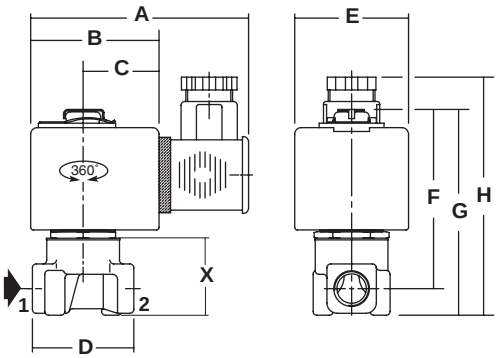

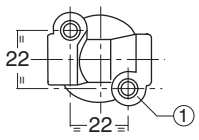

bottom view body

(1) 2 mounting holes Ø M4, depth 6 mm

type	prefix option	A	B	C	D	E	F	G	H	X	weight (2)	
											NC	NO
01	SC	75	45	27	40	39	65	75	92	30	0,4	-
02	SC	80	50	30	40	45	69	80	96	30	0,45	0,5

(2) including coil and connector.

00031GB-2005/R01
Availability, design and specifications are subject to change without notice. All rights reserved.