JUMO GmbH & Co. KG
Delivery address: Mackenrodtstraße 14
36039 Fulda, Germany
Postal address: 36035 Fulda, Germany
Phone: +49 661 6003-0
Fax: +49 661 6003-607
Email: mail@jumo.net
Internet: www.jumo.net

JUMO Instrument Co. Ltd.
JUMO House
Temple Bank, Riverway
Harlow, Essex CM 20 2DY, UK
Phone: +44 1279 63 55 33
Fax: +44 1279 62 50 29
Email: sales@jumo.co.uk
Internet: www.jumo.co.uk

JUMO Process Control, Inc.
6733 Myers Road
East Syracuse, NY 13057, USA
Phone: +1 315 437 5866
Fax: +1 315 437 5860
Email: info.us@jumo.net
Internet: www.jumousa.com

Dial Thermometer

Type 608201

Special features

- Class 1.5
- Display ranges from -40° C to +600° C
- Temperature indicator as built-in or add-on device in the stainless steel case
- Case size Ø: 60 mm, 80 mm and 100 mm
  Front panel: 72x72 mm and 96x96 mm
- Protection type IP 55, also available IP 65



608201/2060

Brief description

Dial thermometers are temperature indicators for universal use. The units come in a stainless steel case with a liquid- or gas-filled measuring system.

The temperature-dependent volume change in a measuring system filled with liquid or the temperature-dependent pressure change in a measuring system filled with gas is converted to a rotational movement of the actual value indicator by a bourdon tube; no transmission gear is required.



608201/2572

Technical data

Case and/or front panel	Stainless steel (1.4301), design type 2496 and 2572, steel zinc-plated
Protection type	IP 55 according to DIN EN 60529 (IP 65 with extra code 404) Basic type extension, at front and rear: 1060, 1080, 1010, 2260, 2280, 2010, 2360, 2380, 2310 Basic type extension, at front only: 2060, 2080, 2010, 2160, 2180, 2110, 2496, 2572
Front pane	Glass in design types 2496 and 2572, and with extra codes 473 and 404 made of acrylic glass (PMMA)
Scale	White, with black lettering (silver, with black lettering in the case of extra code 473 and 404)
Display	Class 1.5 similar to EN 13190
Display correction	On the rear of the case, no display correction with extra code 473 and 404
Limit value temperatures	Transport and storage -30°C to +70°C (for display range -40 to +40°C up to max. 50°C; -30 to +50°C up to max. 60°C)
Rated position	Any

	Liquid filling	**Gas filling**
Measuring system	Display range (AB) ≤ 350°C	Display range (AB) ≥ 400°C
Time constant $t_{0.632}$	Approx. 12 s, measured in flowing water, with a probe Ø of 6 mm made of copper.	Approx. 4 s, measured in flowing oil, with a probe Ø of 10 mm made of stainless steel.
Influential effect of the ambient temperature	In % of the display range (referring to the deviation from the reference value +23°C)	
On case	0.15% of the display range per K ambient temperature change	0.05% of the display range per K ambient temperature change
On capillary (per m)	0.03% of the display range per K ambient temperature change	No influence
	At higher ambient temperature – higher temperature display	

JUMO GmbH & Co. KG
Delivery address: Mackenrodtstraße 14
36039 Fulda, Germany
Postal address: 36035 Fulda, Germany
Phone: +49 661 6003-0
Fax: +49 661 6003-607
Email: mail@jumo.net
Internet: www.jumo.net

JUMO Instrument Co. Ltd.
JUMO House
Temple Bank, Riverway
Harlow, Essex CM 20 2DY, UK
Phone: +44 1279 63 55 33
Fax: +44 1279 62 50 29
Email: sales@jumo.co.uk
Internet: www.jumo.co.uk

JUMO Process Control, Inc.
6733 Myers Road
East Syracuse, NY 13057, USA
Phone: +1 315 437 5866
Fax: +1 315 437 5860
Email: info.us@jumo.net
Internet: www.jumousa.com

Technical data

Display range (AB)	Display range in °C	Measuring range in °C	Tolerance in K (+/-)
469	-40 to +40	-30 to +30	1.5
566	-30 to +50	-20 to +40	1.5
643	-20 to +120	0 to +100	3.0
807	0 to +60	+10 to +50	1.5
814	0 to +100	+10 to +90	1.5
818	0 to +120	+20 to +100	3.0
826	0 to +160	+20 to +140	3.0
832	0 to +200	+20 to +180	3.0
834	0 to +250	+30 to +220	4.0
926	+50 to +250	+70 to +230	3.0
840	0 to +300	+30 to +270	6.0
927	+50 to +300	+80 to +270	4.0
843	0 to +350	+50 to +300	6.0
932	+50 to +350	+80 to +320	6.0
848	0 to +400	+50 to +350	6.0
851	0 to +450	+50 to +400	6.0
854	0 to +500	+50 to +450	8.0
858	0 to +600	+100 to +500	10.0

JUMO GmbH & Co. KG
Delivery address: Mackenrodtstraße 14
36039 Fulda, Germany
Postal address: 36035 Fulda, Germany
Phone: +49 661 6003-0
Fax: +49 661 6003-607
Email: mail@jumo.net
Internet: www.jumo.net

JUMO Instrument Co. Ltd.
JUMO House
Temple Bank, Riverway
Harlow, Essex CM 20 2DY, UK
Phone: +44 1279 63 55 33
Fax: +44 1279 62 50 29
Email: sales@jumo.co.uk
Internet: www.jumo.co.uk

JUMO Process Control, Inc.
6733 Myers Road
East Syracuse, NY 13057, USA
Phone: +1 315 437 5866
Fax: +1 315 437 5860
Email: info.us@jumo.net
Internet: www.jumousa.com

Dimensions

Types: 608201/1060
608201/1080
608201/1010

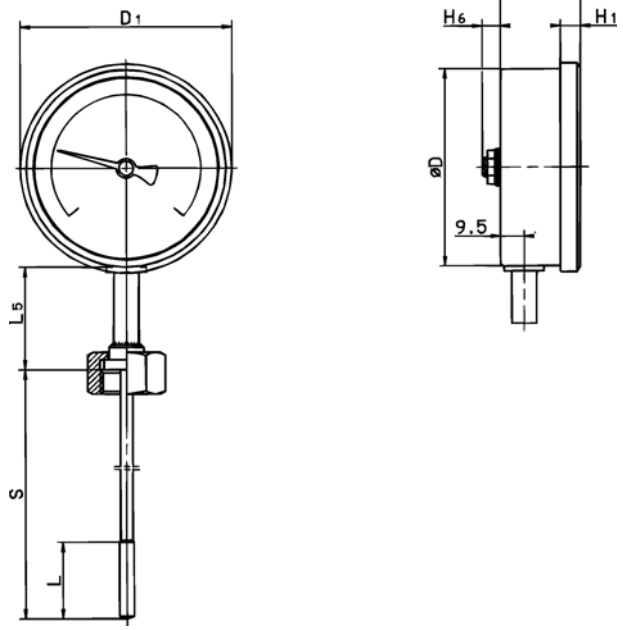

Types: 608201/2060
608201/2080
608201/2010

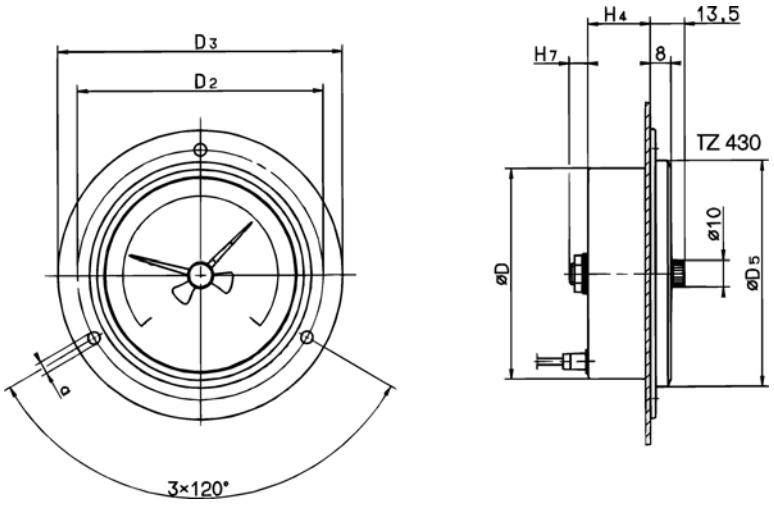

Types: 608201/2160
608201/2180
608201/2110

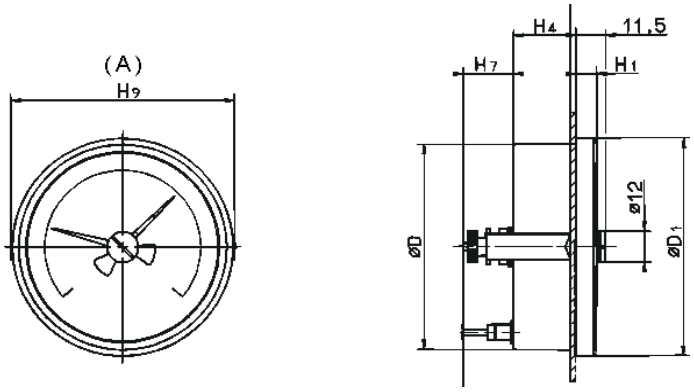

(A) Fastening bar width

JUMO GmbH & Co. KG
Delivery address: Mackenrodtstraße 14
36039 Fulda, Germany
Postal address: 36035 Fulda, Germany
Phone: +49 661 6003-0
Fax: +49 661 6003-607
Email: mail@jumo.net
Internet: www.jumo.net

JUMO Instrument Co. Ltd.
JUMO House
Temple Bank, Riverway
Harlow, Essex CM 20 2DY, UK
Phone: +44 1279 63 55 33
Fax: +44 1279 62 50 29
Email: sales@jumo.co.uk
Internet: www.jumo.co.uk

JUMO Process Control, Inc.
6733 Myers Road
East Syracuse, NY 13057, USA
Phone: +1 315 437 5866
Fax: +1 315 437 5860
Email: info.us@jumo.net
Internet: www.jumousa.com

Dimensions

Types: 608201/2260
608201/2280
608201/2210

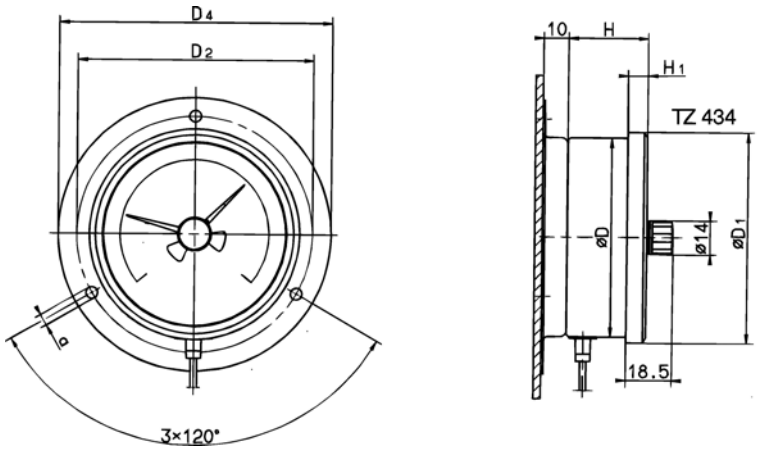

Types: 608201/2360
608201/2380
608201/2310

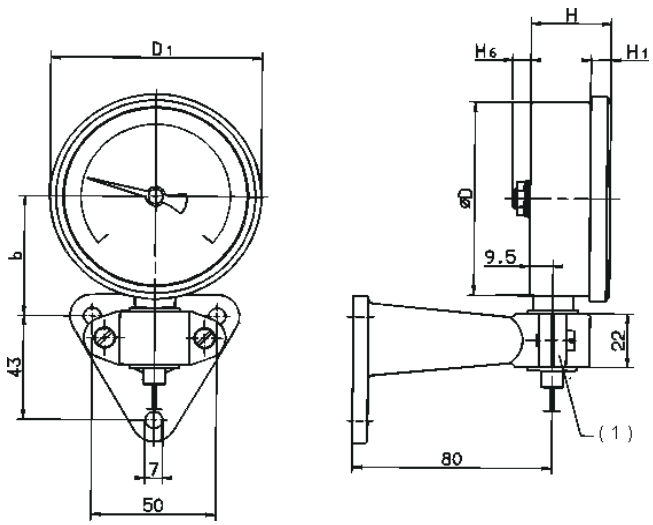

(1) Spigot Ø 20 mm

Case Ø	Panel cut-out Ø
60 mm	62 $^{0.5}_{0}$ mm
80 mm	82 $^{0.5}_{0}$ mm
100 mm	102 $^{0.5}_{0}$ mm

JUMO GmbH & Co. KG
Delivery address: Mackenrodtstraße 14
36039 Fulda, Germany
Postal address: 36035 Fulda, Germany
Phone: +49 661 6003-0
Fax: +49 661 6003-607
Email: mail@jumo.net
Internet: www.jumo.net

JUMO Instrument Co. Ltd.
JUMO House
Temple Bank, Riverway
Harlow, Essex CM 20 2DY, UK
Phone: +44 1279 63 55 33
Fax: +44 1279 62 50 29
Email: sales@jumo.co.uk
Internet: www.jumo.co.uk

JUMO Process Control, Inc.
6733 Myers Road
East Syracuse, NY 13057, USA
Phone: +1 315 437 5866
Fax: +1 315 437 5860
Email: info.us@jumo.net
Internet: www.jumousa.com

Dimensions

Type: 608201/2572

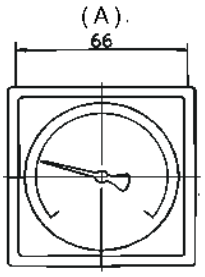

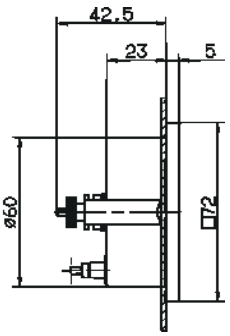

(A) Fastening bar width

Panel cut-out: Ø 62 $^{+0.5}_{0}$ mm

Type: 608201/2496

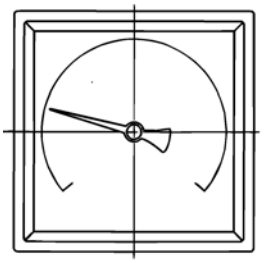

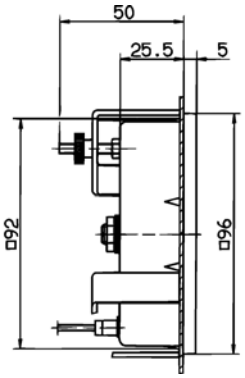

Panel cut-out: 92 x 92 $^{+0.8}_{0}$ mm

Case Ø	H	H_1	H_4	H_6	H_7	H_9	D	D_1	D_2	D_3	D_4	D_5	a	b	L_5
60	30 (36)	7	23 (28)	Appro x. 7.5	19.5	66	60	65	75	85	86	66	3.6	39.5 (50)	41.5*
80	32.5	8	24.5			86	80	85	95	110	110	86	4.8	49.5	
100	33 (36)		25 (28)			106	100	106	116	132	132	107.5		59.5 (70)	

All specifications in mm

* With protection tube connection type TA 02, L_5 is ≤ 70.5 mm
With protection tube connection types TA 22 and TA 31, L_5 is = 49.5 mm

( ) -Values apply for TZ 473 or TZ 404

JUMO GmbH & Co. KG
Delivery address: Mackenrodtstraße 14
36039 Fulda, Germany
Postal address: 36035 Fulda, Germany
Phone: +49 661 6003-0
Fax: +49 661 6003-607
Email: mail@jumo.net
Internet: www.jumo.net

JUMO Instrument Co. Ltd.
JUMO House
Temple Bank, Riverway
Harlow, Essex CM 20 2DY, UK
Phone: +44 1279 63 55 33
Fax: +44 1279 62 50 29
Email: sales@jumo.co.uk
Internet: www.jumo.co.uk

JUMO Process Control, Inc.
6733 Myers Road
East Syracuse, NY 13057, USA
Phone: +1 315 437 5866
Fax: +1 315 437 5860
Email: info.us@jumo.net
Internet: www.jumousa.com

Order details

Dial thermometer, class 1.5, type 608201

Order code:	(1)	Basic type	
608201		Mechanical dial thermometer, class 1.5	
	(2)	**Basic type extension**	
1060		Design type: 10; case size: ø 60 mm	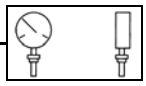
1080		Design type: 10; case size: ø 80 mm	
1010		Design type: 10; case size: ø 100 mm	
2060		Design type: 20; case size: ø 60 mm	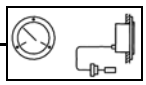
2080		Design type: 20; case size: ø 80 mm	
2010		Design type: 20; case size: ø 100 mm	
2160		Design type: 21; case size: ø 60 mm	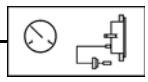
2180		Design type: 21; case size: ø 80 mm	
2110		Design type: 21; case size: ø 100 mm	
2260		Design type: 22; case size: ø 60 mm	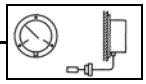
2280		Design type: 22; case size: ø 80 mm	
2210		Design type: 22; case size: ø 100 mm	
2360		Design type: 23; case size: ø 60 mm	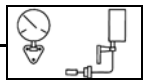
2380		Design type: 23; case size: ø 80 mm	
2310		Design type: 23; case size: ø 100 mm	
2496		Design type: 24; case size: 96 x 96 mm	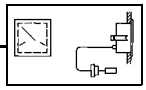
2572		Design type: 25; case size: 72 x 72 mm	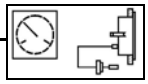
	(3)	**Display range (AB)**	
469		-40 to + 40°C	
566		-30 to + 50°C	
643		-20 to +120°C	
807		0 to + 60°C	
810		0 to + 80°C	
814		0 to +100°C	
818		0 to +120°C	
826		0 to +160°C	
832		0 to +200°C	
834		0 to +250°C	
926		+50 to +250°C	
840		0 to +300°C	
927		+50 to +300°C	
843		0 to +350°C	
932		+50 to +350°C	
848		0 to +400°C	
851		0 to +450°C	
854		0 to +500°C	
858		0 to +600°C	

JUMO GmbH & Co. KG
Delivery address: Mackenrodtstraße 14
36039 Fulda, Germany
Postal address: 36035 Fulda, Germany
Phone: +49 661 6003-0
Fax: +49 661 6003-607
Email: mail@jumo.net
Internet: www.jumo.net

JUMO Instrument Co. Ltd.
JUMO House
Temple Bank, Riverway
Harlow, Essex CM 20 2DY, UK
Phone: +44 1279 63 55 33
Fax: +44 1279 62 50 29
Email: sales@jumo.co.uk
Internet: www.jumo.co.uk

JUMO Process Control, Inc.
6733 Myers Road
East Syracuse, NY 13057, USA
Phone: +1 315 437 5866
Fax: +1 315 437 5860
Email: info.us@jumo.net
Internet: www.jumousa.com

Order details

Dial thermometer, class 1.5, type 608201

Order code:

	(4)	**Capillary type (FL)**[1]	
00		Without (with rigid connection)	
02		FL 02 Cu capillary with Cu textile braiding, approx. Ø 2.5 mm (up to AB end value +300°C)	
11		FL11 Cu capillary with PE coating, approx. ø 3.5 mm (up to AB end value +120°C)	
17		FL 17 Stainless steel capillary, Ø 1.5 mm	
21		FL21 Cu capillary, Ø 1.0 mm (up to AB end value +300°C)	
	(5)	**Capillary length**[1]	
0		Without (with rigid connection)	
1000		1000 mm	
2000		2000 mm	
3000		3000 mm	
4000		4000 mm	
5000		5000 mm	
. . . .		Special length (specifications in plain text: 1,000 mm increments, maximum length 10,000 mm)	
	(6)	**Process connection (PC)**[1]	
750		TF01; Temperature probe with stepped support tube	
752		TF11; Temperature probe without support tube	
843		TA02; Protection tube with union nut and loose screw connection[2]	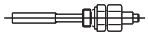
161		TA03; Protection tube with loose union nut	
847		TA06; Displaceable threaded fitting on support tube[2]	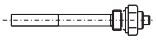
311		TA20; Protection tube with loose screw connection and connection collar[2]	
872		TA21; Protection tube with loose pressure screw and conical seal	
873		TA22; Protection tube with loose pressure screw, conical seal, and loose screw connection[2]	
401		TA23; Protection tube with pressure screw and contact pressure spring	
848		TA25; Displaceable threaded fitting on capillary[2] (with FL 17 and FL 21 only)	
913		SH 07; Screw-in sleeve, multi-sectional, with clamping piece and fixing screw[2] (with TF 01)	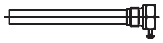
820		SH 09; Weld-in sleeve, multi-sectional, with clamping piece and fixing screw (not with FL 21 – weld collar with steel 1.4515) (with TF 01)	
876		SH10; Screw-in sleeve, multi-sectional[2]	
871		SH11; Screw-in sleeve, multi-sectional[2]	
	(7)	**Diameter of process connection (PC)**[1]	
6		Ø 6 mm	
8		Ø 8 mm	
10		Ø 10 mm	
11		Ø 11 mm	
12		Ø 12 mm	

[1] For description and special features refer to data sheet 608730.
[2] Screw-in spigot according to DIN 3852 form A).
[3] List extra codes in sequence, separated by commas·

JUMO GmbH & Co. KG
Delivery address: Mackenrodtstraße 14
36039 Fulda, Germany
Postal address: 36035 Fulda, Germany
Phone: +49 661 6003-0
Fax: +49 661 6003-607
Email: mail@jumo.net
Internet: www.jumo.net

JUMO Instrument Co. Ltd.
JUMO House
Temple Bank, Riverway
Harlow, Essex CM 20 2DY, UK
Phone: +44 1279 63 55 33
Fax: +44 1279 62 50 29
Email: sales@jumo.co.uk
Internet: www.jumo.co.uk

JUMO Process Control, Inc.
6733 Myers Road
East Syracuse, NY 13057, USA
Phone: +1 315 437 5866
Fax: +1 315 437 5860
Email: info.us@jumo.net
Internet: www.jumousa.com

Order details

Dial thermometer, class 1.5, type 608201

Order code:

	(8)	Thread type of process connection (PC)[1]
000		Without thread (for TF 01 and TF 11)
103		Screw connection $G^3/_8$
104		Screw connection $G^1/_2$
105		Screw connection $G^3/_4$
114		Screw connection M 10 × 1 (only for TA 23 and SH 11)
	(9)	**Material, probe / support tube**[1]
26		Stainless steel (CrNi, 1.4571)
96		Copper (Cu) / brass (CuZn) (up to 200°C)
95		Stainless steel (CrNi, 1.4571) – probe / brass (CuZn) – support tube (from 250°C)
	(10)	**Material of process connection (PC)**[1]
00		Without (only TF 01 and TF 11)
26		Stainless steel (CrNi, 1.4571)
46		Brass (CuZn)
	(11)	**Insertion length, process connection (PC)[1] (dimension "EL" or "S")**
0		Minimum insertion length TF 11 (active probe dimension)
50		50 mm
100		100 mm
150		150 mm
200		200 mm
. . .		Special length (specifications in plain text – 50 mm increments)
	(12)	**Extra codes (TZ)**
000		Without extra code
315		Strain relief spring on case and probe (not with FL 21)
404		Protection type IP 65 according to EN 60529 (only with basic type extension: 2060, 2260, 2360, 2010, 2210, 2310)
430		Drag indicator, with case diameter 60, 80 and 100 mm (not with TZ 404)
434		Drag indicator can be adjusted with a screwdriver, protected by a cover (not possible with TZ 404)
522		Customized scale

Special versions upon request!

Order code:

(1)		**(2)**		**(3)**		**(4)**		**(5)**		**(6)**		**(7)**		**(8)**		**(9)**		**(10)**		**(11)**		**(12)**		
608201	/	. . . .	-	. . .	-	. .	-	. . . .	-	. . .	-	. .	-	. . .	-	. .	-	. .	-	. . .	/	. .	,	. . .

Order example:

608201	/	1010	-	818	-	00	-	0	-	750	-	8	-	000	-	26	-	26	-	100	/	000[3]		

[1] For description and special features refer to data sheet 608730.
[2] Screw-in spigot according to DIN 3852 form A.
[3] List extra codes in sequence, separated by commas.