DATA SHEET

Thermal overload relay TF65 and TF96

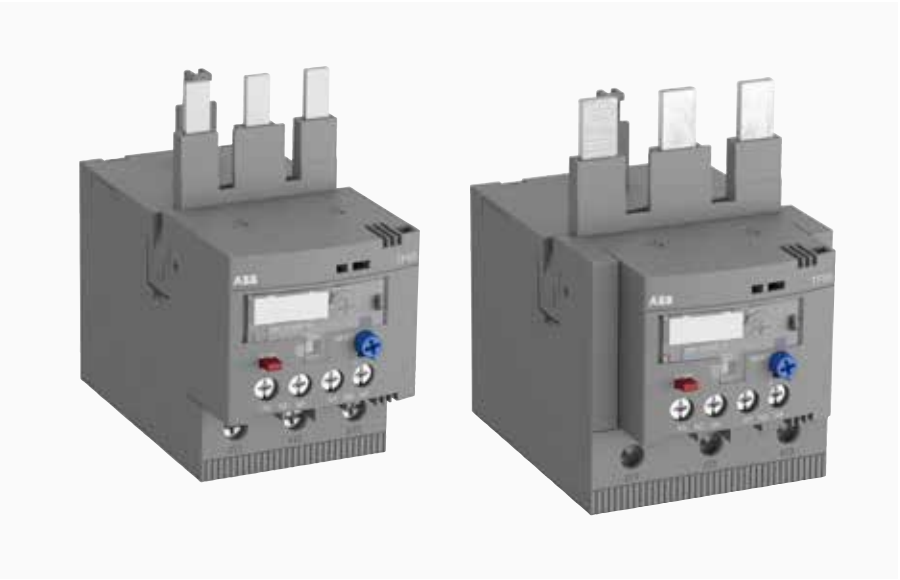

Thermal overload relays are economic electromechanical protection devices for the main circuit. They are used mainly to protect motors against overload and phase failures. Starter combinations are set up together with contactors.

Description

- Overload protection – trip class 10
- Phase loss sensitivity
- Temperature compensation from -25...+60 °C
- Adjustable current setting for overload protection
- Automatic or manual reset selectable
- Suitable for three- and single-phase application
- Trip-free mechanism
- Status indication
- STOP and TEST function
- Direct mounting onto block contactors
- Sealable operating elements



Order data

TF65 and TF96 screw terminal for AF contactors

Setting range A	Type	Order code	Weight Pkg (1 pce) kg
22...28	TF65-28	1SAZ811201R1001	0.456
25...33	TF65-33	1SAZ811201R1002	0.456
30...40	TF65-40	1SAZ811201R1003	0.456
36...47	TF65-47	1SAZ811201R1004	0.456
44...53	TF65-53	1SAZ811201R1005	0.456
50...60	TF65-60	1SAZ811201R1006	0.466
57...67	TF65-67	1SAZ811201R1007	0.466
40...51	TF96-51	1SAZ911201R1001	0.620
48...60	TF96-60	1SAZ911201R1002	0.620
57...68	TF96-68	1SAZ911201R1003	0.620
65...78	TF96-78	1SAZ911201R1004	0.620
75...87	TF96-87	1SAZ911201R1005	0.620
84...96	TF96-96	1SAZ911201R1006	0.630

Suitable for mounting on: TF65: AF40, AF52, AF65
TF96: AF80, AF96

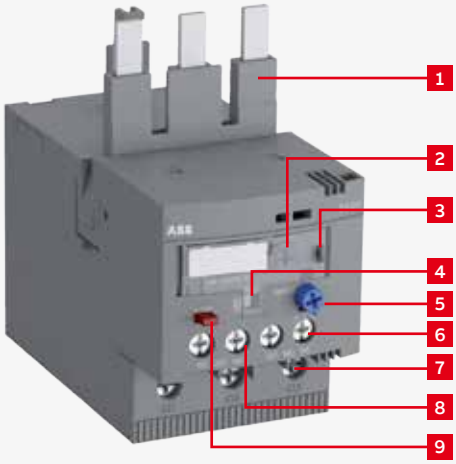

Functional description

1. Terminals 1L1, 3L2, 5L3
2. Current setting range
   Adjustable current setting for overload protection
3. Sealable operating elements
4. TEST Status indication
5. RESET button
   Automatic or manual reset selectable
6. Signaling contacts 97-98
7. Terminals 2T1, 4T2, 6T3
8. Tripping contacts 95-96
9. STOP button

Application / internal function

The thermal overload relays are three pole relays with bimetal tripping elements (1 per pole). The motor current flows through the bimetal tripping elements and heats them directly and indirectly. In case of an overload (over current), the bimetal elements become bent as a result of the heating. This leads to a release of the relay and a change of the contacts switching position (95-96 / 97-98). The contact 95-96 is used to control the load contactor.

The overload relays have a setting scale in Amperes, which allows the direct adjusting of the relay without any additional calculation. In compliance with international and national standards, the setting current is the rated current of the motor and not the tripping current (no tripping at 1.05 x I, tripping at 1.2 x I; I = setting current). The relays are constructed in way that they protect themselves in the event of an overload. The overload relay has to be protected against short-circuit. The appropriate short-circuit protective devices are shown in the table.

Operation mode

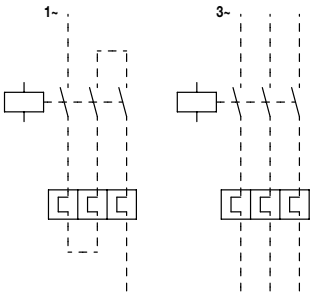

Wiring diagram

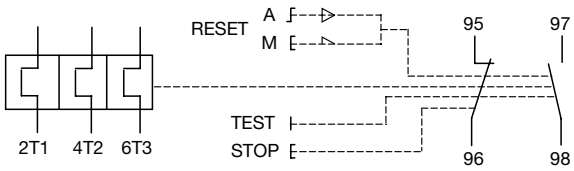

	Contact 95-96	Contact 97-98	Status indication	Comment
Trip state	open	closed		
RESET state	closed	open	ON	
TEST manual reset mode	open	closed		
TEST auto reset mode	open	closed		while TEST is operated
STOP while device is in trip state	open	closed		STOP button has no function
STOP while device is in RESET state	open	open		while STOP button is pressed

Resistance and power loss per pole and Short-circuit protective device

Type	Setting range		Resistance per pole	Power loss per pole		Short-circuit protection device coordination type 2
	lower value	upper value		at lower value	at upper value	
	A	A	mΩ	W	W	
TF65-28	22.0	28.0	3.937	1.9	3.1	80 A, gG Type Fuses
TF65-33	25.0	33.0	3.474	2.2	3.8	80 A, gG Type Fuses
TF65-40	30.0	40.0	2.321	2.1	3.7	100 A, gG Type Fuses
TF65-47	36.0	47.0	1.645	2.1	3.6	125 A, gG Type Fuses
TF65-53	44.0	53.0	1.292	2.5	3.6	125 A, gG Type Fuses
TF65-60	50.0	60.0	0.939	2.3	3.4	125 A, gG Type Fuses
TF65-67	57.0	67.0	0.759	2.5	3.4	160 A, gG Type Fuses
TF96-51	40.0	51.0	1.647	2.6	4.3	125 A, gG Type Fuses
TF96-60	48.0	60.0	1.316	3.0	4.7	160 A, gG Type Fuses
TF96-68	57.0	68.0	0.992	3.2	4.6	160 A, gG Type Fuses
TF96-78	65.0	78.0	0.632	2.7	3.8	200 A, gG Type Fuses
TF96-87	75.0	87.0	0.516	2.9	3.9	200 A, gG Type Fuses
TF96-96	84.0	96.0	0.397	2.8	3.7	250 A, gG Type Fuses

Technical diagrams

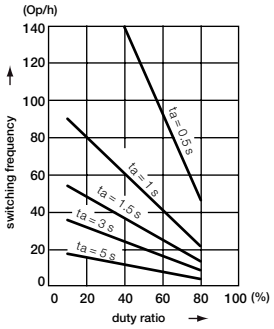

Intermittent periodic duty, ta: Motor starting time

Main dimensions

in mm, inches

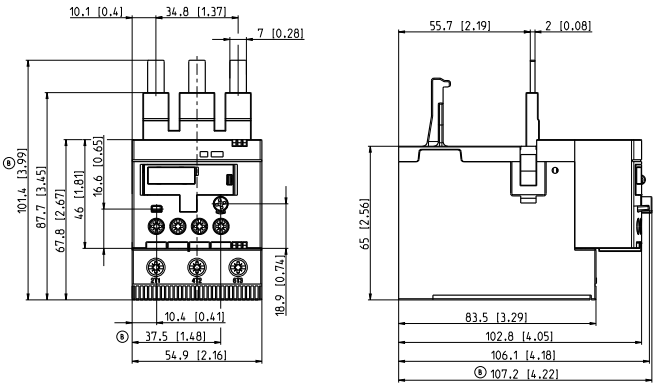

TF65

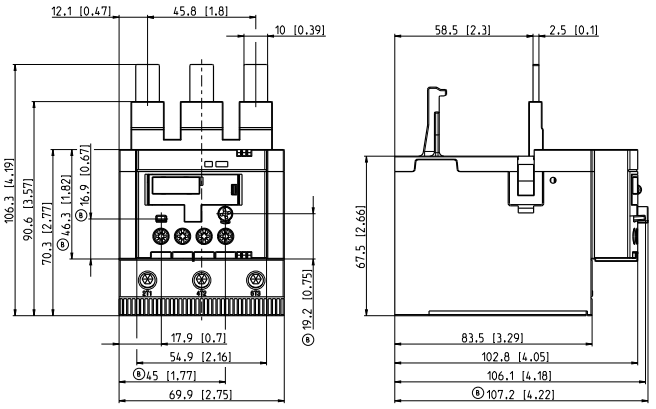

TF96

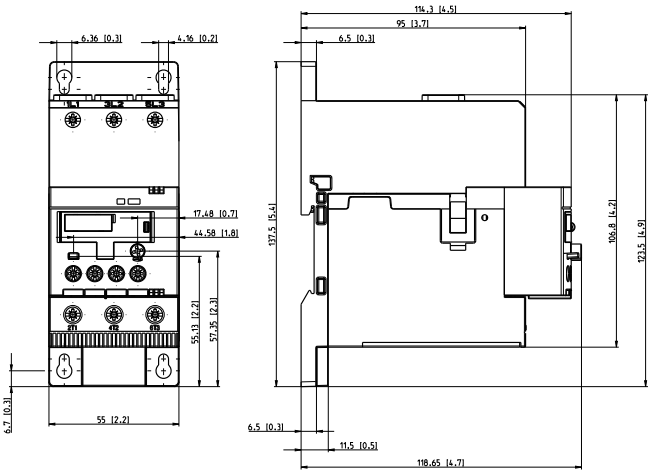

DB65 - Single mounting kit + overload relay TF65

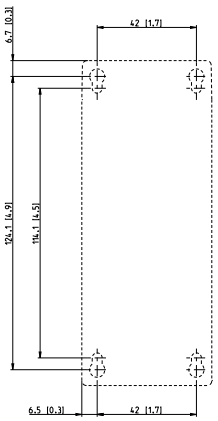

DB65 - drilling plan

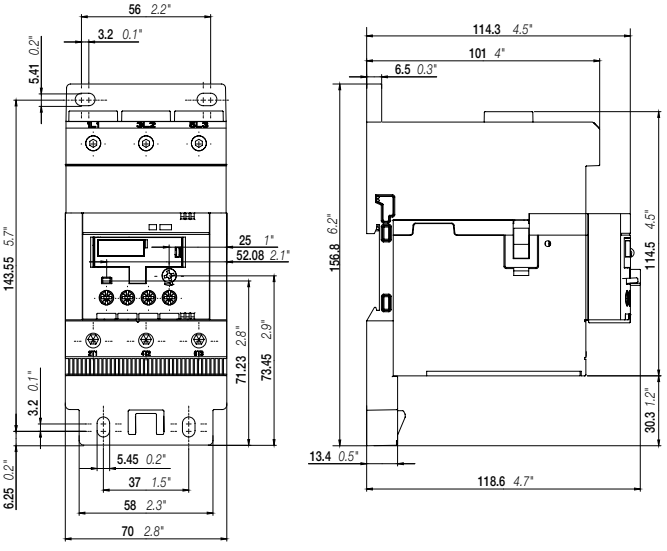

DB96 - Single mounting kit + electronic overload relay TF96

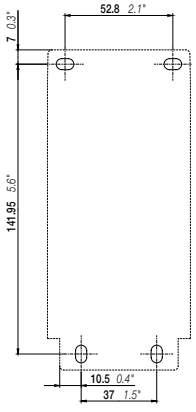

DB96 - drilling plan

Technical data IEC/EN

Data at T_A = 40 °C and at rated values, if nothing else indicated

Main circuit

Terminal marking	**TF65 / TF96**
Rated operational voltage Ue	690 V AC
	440 V DC
Setting range - thermal overload protection	see table on page 1
Rated operational current AC-3 Ie	see upper value of setting range, see table on page 3
Trip class	10
Rated frequency	DC, 50/60 Hz
Number of poles	3
Resistance per pole	see table on page 3
Power loss per pole	see table on page 3
Short-circuit protective devices	see table on page 3

Isolation data

Rated impulse withstand voltage U_{imp}	8 kV
Rated insulation voltage U_i	690 V
Pollution degree	3

Electrical connection

	TF65	**TF96**	**DB65**	**DB96**
solid	1/2x 2.5...16 mm² 1x 2.5...35 mm²	1/2x 6...35 mm² 1x 6 … 50 mm²	1x 2.5...35 mm² 2x 2.5...16 mm²	1x 6...70 mm² 2x 6...35 mm²
stranded	1/2x 2.5...16 mm² 1x 2.5...35 mm²	1/2x 6...35 mm² 1x 6 … 50 mm²	1x 2.5...35 mm² 2x 2.5...16 mm²	1x 6...70 mm² 2x 6...35 mm²
flexible with ferrule	1/2x 2.5...10 mm² 1x 2.5...35 mm²	1/2x 6...35 mm² 1x 6 … 50 mm²	1x 2.5...35 mm² 2x 2.5...10 mm²	1x 6...50 mm² 2x 6...35 mm²
flexible with ferrule insulated	1/2x 2.5...10 mm² 1x 2.5...35 mm²	1/2x 6...16 mm² 1x 6 … 50 mm²	1x 2.5...35 mm² 2x 2.5...10 mm²	1x 6 … 50 mm² 2x 6...16 mm²
flexible without ferrule	1/2x 2.5...16 mm² 1x 2.5...35 mm²	1/2x 6...35 mm² 1x 6 … 50 mm²	1x 2.5...35 mm² 2x 2.5...16 mm²	1x 6...70 mm² 2x 6...35 mm²
Stripping length	17 mm	20 mm	17 mm	22 mm
Tightening torque	4…4.5 Nm	6...9 Nm	4…4.5 Nm	6 Nm
Recommended screw driver	Pozidriv 2	Hexagon 4	M6, Pozidriv 2	M8, Hexagon 4

Auxiliary circuit

Terminal marking		**95-96, 97-98**
Rated operational voltage Ue		600 V
Conventional free air thermal current Ith	N.C., 95-96	6 A
	N.O., 97-98	4 A
Rated frequency		DC, 50/60 Hz
Number of poles		1 N.C. + 1 N.O.
Rated operational current Ie acc. to IEC/EN 60947-5-1 for utilization category		
at AC-15 at 110-120 V	N.C., 95-96	3.00 A
	N.O., 97-98	0.5 A
at AC-15 at 220-230-240 V	N.C., 95-96	3.00 A
	N.O., 97-98	0.5 A
at AC-15 at 440 V	N.C., 95-96	0.75 A
	N.O., 97-98	0.5 A
at AC-15 at 480-500 V	N.C., 95-96	0.75 A
	N.O., 97-98	0.5 A
at DC-13 at 24 V	N.C., 95-96	1.25 A
	N.O., 97-98	1.25 A
at DC-13 at 110-120-125 V	N.C., 95-96	0.55 A
	N.O., 97-98	0.55 A
at DC-13 at 250 V	N.C., 95-96	0.27 A
	N.O., 97-98	0.27 A
at DC-13 at 500 V	N.C., 95-96	0.15 A
	N.O., 97-98	0.15 A
Minimum switching capacity		12 V / 3 mA
Short-circuit protective device	N.C., 95-96	6 A, Type gG
	N.O., 97-98	4 A, Type gG

Isolation data

Rated impulse withstand voltage Uimp	6 kV
Rated insulation voltage Ui	690 V
Pollution degree	3

Electrical connection

solid	1/2 x 0.75...4 mm²
stranded	1/2 x 0.75...4 mm²
flexible with ferrule	1/2 x 0.75...2.5 mm²
flexible with ferrule insulated	1 x 0.75...2.5 mm² 2 x 0.75...1.5 mm²
flexible without ferrule	1/2 x 0.75...1 mm² 1/2 x 1...2.5 mm²
Stripping length	9 mm
Tightening torque	1...1.2 Nm
Recommended screw driver	Pozidriv 2

General data

Duty time			100 %
Operating frequency without early tripping			up to 15 operations/h or 60 operations/h with 40 % duty ratio, if the motor breaking current 6 x In and the motor starting time does not exceed 1 s
Dimensions (W x H x D)			see drawing "Dimensions"
Weight			see table "Order data"
Mounting			mount on the contactor and tighten the screws of the main circuit terminals or with single mounting kit on DIN rail (35 mm)
Mounting position			position 1-6
Minimum distance to other units same type	horizontal		none
	vertical		not applicable
Minimum distance to electrical conductive board	horizontal	up to 400 V	none
		up to 690 V	1 mm
	vertical		not applicable
Degree of protection	housing		IP20
	main circuit terminals		IP10
Altitude			up to 2000 m

Electromagnetic compatibility

Electromagnetic compatibility	not applicable

Environmental data

Ambient air temperature		
Operation	open - compensated	-40 ... +70 °C
	open	-40 ... +70 °C
Storage		-50...+85 °C
Ambient air temperature compensation		acc. to IEC/EN 60947-4-1
Resistance to vibrations acc. to IEC 60068-2-6 (Fc)		5g / 3...150 Hz
Resistance to shock acc. to IEC 60068-2-27(Ea)		25g / 11 ms

Standards / directives

Standards	IEC/EN 60947-1 IEC/EN 60947-4-1 IEC/EN 60947-5-1 UL 60947-1 UL 60947-4-1
Low Voltage Directive	2006/95/EC
EMC Directive	2004/108/EC
RoHS Directive	2002/95/EC

Technical data UL/CSA

Full load amps and short-circuit protective devices

Type	Full load amps (FLA)	Short-circuit protective device 480 / 600 V AC		480 / 600 V AC	
		SCCR	Fuse type	SCCR	Fuse type
TF65-28	28 A	5 kA	100 A, K5 / RK5	18 kA	110 A, Class J
TF65-33	33 A	5 kA	100 A, K5 / RK5	18 kA	110 A, Class J
TF65-40	40 A	5 kA	100 A, K5 / RK5	18 kA	110 A, Class J
TF65-47	47 A	5 kA	125 A, K5 / RK5	18 kA	125 A, Class J
TF65-53	53 A	10 kA	125 A, K5 / RK5	18 kA	125 A, Class J
TF65-60	60 A	10 kA	150 A, K5 / RK5	18 kA	150 A, Class J
TF65-67	67 A	10 kA	150 A, K5 / RK5	18 kA	150 A, Class J
TF96-51	51 A	5 kA	150 A, K5 / RK5	18 kA	125 A, Class J
TF96-60	60 A	10 kA	150 A, K5 / RK5	18 kA	150 A, Class J
TF96-68	68 A	10 kA	150 A, K5 / RK5	18 kA	150 A, Class J
TF96-78	78 A	10 kA	175 A, K5 / RK5	18 kA	175 A, Class J
TF96-87	87 A	10 kA	200 A, K5 / RK5	18 kA	200 A, Class J
TF96-96	96 A	10 kA	250 A, K5 / RK5	18 kA	200 A, Class J

Main circuit

Max. operational voltage	600 V AC
Trip rating	125% of FLA
Full load amps (FLA)	see table above
Short-circuit rating RMS symmetrical	see table above
Short-circuit protective device	see table above

Electrical connection

	TF65	TF96	DB65	DB96
Connecting capacity				
stranded	1x AWG 12...2 2x AWG 12...6	1x AWG 8...1 2x AWG 8...3	1x AWG 12...2 2x AWG 12...6	1x AWG 8...1 2x AWG 8...2
flexible without ferrule	1x AWG 12...2 2x AWG 12...6	1x AWG 8...1 2x AWG 8...3	1x AWG 12...2 2x AWG 12...6	1x AWG 8...1 2x AWG 8...3
Stripping length	17 mm	20 mm	17 mm	22 mm
Tightening torque	35...40 lb-in	53...80 lb-in	35...40 lb-in	55 lb-in

Auxiliary circuit

Conventional thermal current	N.C., 95-96	5 A
	N.O., 97-98	2.5 A
Making and breaking capacity	N.C., 95-96	B600, Q600
	N.O., 97-98	D300, Q600

Electrical connection

Connecting capacity	
stranded	1/2 x AWG 18...12
flexible without ferrule	1/2 x AWG 18...12
Stripping length	9 mm
Tightening torque	9 ... 11 lb-in

ABB STOTZ-KONTAKT GmbH
Electrification Business
Low Voltage Products and Systems
Eppelheimer Straße 82
D-69123 Heidelberg / Germany
Phone: +49 (0) 6221 7 01-0
Fax: +49 (0) 6221 7 01-13 25
E-Mail: info.desto@de.abb.com

You can find the address of your local sales organization on the ABB home page
https://new.abb.com/low-voltage/products/motor-protection/manual-motor-starter

We reserve the right to make technical changes or modify the contents of this document without prior notice. With regards to purchase orders, the agreed particulars shall prevail. ABB AG does not accept any responsibility whatsoever for potential errors or possible lack of information in this document.

We reserve all rights in this document and in the subject matter and illustrations contained therein. Any reproduction, disclosure to third parties or utilization of its contents – in whole or in parts – is forbidden without prior written consent of ABB AG.

Copyright© 2022 ABB - All rights reserved

2CDC106069D0202 - (12.2022 PDF)