COMBINATION WRENCHES - METRIC | E113222



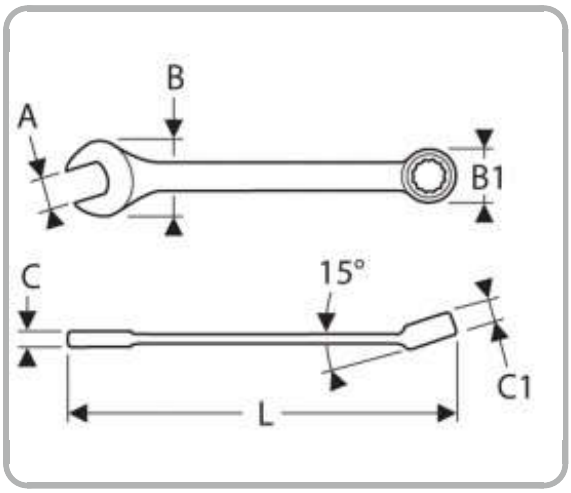

Description

- ISO 691 - ISO 1711-1 - ISO 3318 - ISO 7738 - DIN 3113
- 12-point OGV® ring angled at 15°.
- Open end angled at 15° from handle axis.
- OGV® profile maximizing the contact surface with the nut for a longer lifetime.
- Forged in Chrome Vanadium steel.
- High chrome finish.

Information

EAN	3258951132227
A [mm]	27
B [mm]	56.2
B1 [mm]	40
C [mm]	8.9
C1 [mm]	14.4
L [mm]	310
Conditioning	1
[g]	370