# E30054

## O-ring

O-RG 24,00x2,00/EPDM 5 PIECE

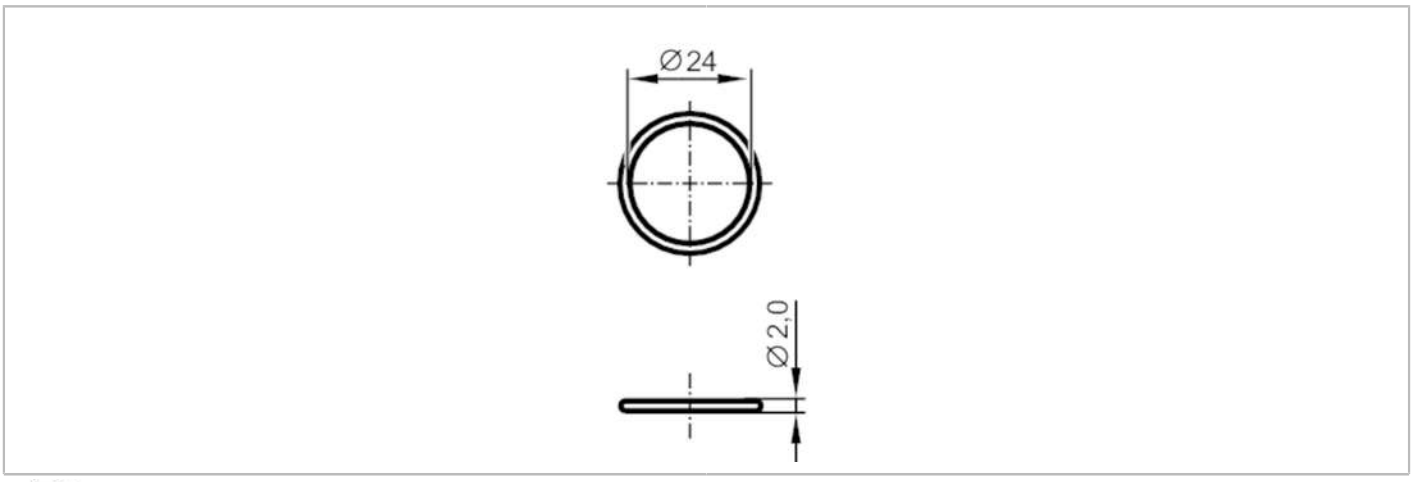


EC 1935/2004 EHEDG Certified FDA

| Mechanical data | | |
|---|---|---|
| Weight | [g] | 3 |
| Inside diameter | [mm] | 24 |
| External diameter | [mm] | 28 |
| Materials | | EPDM |

| Remarks | |
|---|---|
| Pack quantity | 5 pcs. |