

4-pole contactor,80A/AC-1,AC operated

Part no. DILMP80(110V50HZ,120V60HZ)

Article no. 109877

Powering Business Worldwide

Program

Product range			Contactors
Application			Contactors for 4 pole electric consumers
Subrange			Contactors up to 200 A, 4 pole
Connection technique			Screw terminals
Pole			4 pole
Rated operational current			
AC-1			
Conventional free air thermal current, 3 pole, 50 - 60 Hz			
at 40 °C	$I_{th} = I_e$	A	80
at 50 °C	$I_{th} = I_e$	A	76
at 60 °C	$I_{th} = I_e$	A	69
Contact sequence			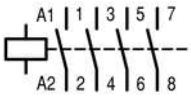
For use with			DILM150-XHI(A)(V)… or DILM1000-XHI11-SA or DILM1000-XHI(V)11-SI
Voltage AC/DC			AC operation
InstructionsContacts to EN 50012.			

Approbationen

Product Standards	IEC/EN 60947-4-1; UL 508; CSA-C22.2 No. 14-05; CE marking
UL File No.	E29096
UL CCN	NLDX
CSA File No.	012528
CSA Class No.	2411-03, 3211-04
NA Certification	UL listed, CSA certified
Specially designed for NA	No

General

Standards			IEC/EN 60947, VDE 0660, UL, CSA
Lifespan, mechanical			
AC operated	Operations	x 10^6	10
DC operated	Operations	x 10^6	10
Operating frequency, mechanical			
AC operated	Operations/h		5000
DC operated	Operations/h		5000
Climatic proofing			Damp heat, constant to IEC 60068-2-3 Damp heat, cyclic to IEC 60068-2-30
Ambient temperature		°C	
Open		°C	- 25 - 60
Enclosed		°C	- 25 - 40
Storage		°C	- 40 - 80

Mounting position, AC- and DC operated			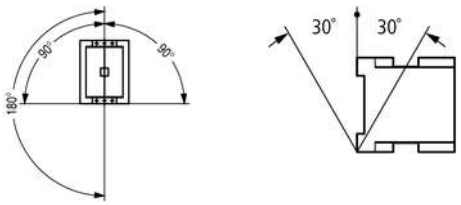
Mechanical shock resistance (IEC/EN 60068-2-27)			
Half-sinusoidal shock, 10 ms			
Main contacts			
N/O contact		g	10
Auxiliary contacts			
N/O contact		g	7
N/C contact		g	5
Protection type			IP00
with accessories			IP20
Protection against direct contact when actuated from front (EN 90274)			Finger- and back-of-hand proof
Terminal capacity main cable			
Solid		mm^2	1 x (2.5 - 16) 2 x (2.5 - 16)
Flexible with ferrule		mm^2	1 x (2.5 - 35) 2 x (2.5 - 25)
Stranded		mm^2	1 x (16 - 50) 2 x (16 - 35)
Solid or stranded		AWG	12 - 2
Flat conductor	Number of segments x width x thickness	mm	2 x (6 x 9 x 0.8)
Terminal capacity control circuit cables			
Solid		mm^2	1 x (0.75 - 4) 2 x (0.75 - 4)
Flexible with ferrule		mm^2	1 x (0.75 - 2.5) 2 x (0.75 - 2.5)
Solid or stranded		AWG	18 - 14
Main cable connection screw/bolt			M6
Tightening torque		Nm	3.3
Control circuit cable connection screw/bolt			M3.5
Tightening torque		Nm	1.2
Tool			
Main cable			
Pozidriv screwdriver		Size	2
Standard screwdriver		mm	0.8 x 5.5 1 x 6
Control circuit cables			
Pozidriv screwdriver		Size	2
Standard screwdriver		mm	0.8 x 5.5 1 x 6

Main conducting paths

Rated impulse withstand voltage	U_{imp}	V AC	8000
Overvoltage category/pollution degree			III/3
Rated insulation voltage	U_i	V AC	690
Rated operational voltage	U_e	V AC	690
Safe isolation to VDE 0106 Part 101 and Part 101/A1			
between coil and contacts		V AC	440
between the contacts		V AC	440
Making capacity (p.f. to IEC/EN 60947)			

	Up to 690 V	A	700
Breaking capacity			
220/230 V		A	500
380/400 V		A	500
500 V		A	500
660/690 V		A	296
Short-circuit rating			
Short-circuit protection maximum fuse			
Type “2” coordination			
400 V	gG/gL 500 V	A	80
690 V	gG/gL 690 V	A	63
Type “1” coordination			
400 V	gG/gL 500 V	A	160
690 V	gG/gL 690 V	A	80

AC

AC-1 duty			
Rated operational current			
Conventional free air thermal current, 3 pole, 50 - 60 Hz			
Open			
at 40 °C	$I_{th} = I_e$	A	80
at 50 °C	$I_{th} = I_e$	A	76
at 60 °C	$I_{th} = I_e$	A	69
enclosed	I_{th}	A	64
Conventional free air thermal current, 1 pole			
open	I_{th}	A	207
enclosed	I_{th}	A	186
Motor rating	P	kWh	
Motor rating AC-1 230 V		kW	29
Motor rating AC-1 240 V		kW	32
Motor rating AC-1 380/400 V		kW	50
Motor rating AC-1 415 V		kW	55
Motor rating AC-1 440 V		kW	58
Motor rating AC-1 500 V		kW	66
Motor rating AC-1 690 V		kW	87
AC-3 duty			
Rated operational current AC-3 open, 50 - 60 Hz, 3 pole	I_e		
220/230 V	I_e	A	50
240 V	I_e	A	50
380/400 V	I_e	A	50
415 V	I_e	A	50
440V	I_e	A	50
500 V	I_e	A	50
660/690 V	I_e	A	32
Motor rating	P	kWh	
220/230 V	P	kW	15.5
240V	P	kW	17
380/400 V	P	kW	22
415 V	P	kW	30
440 V	P	kW	32
500 V	P	kW	36
660/690 V	P	kW	30

DC

Rated operational current, open			
DC-1 operation			
60 V	I_e	A	80
110 V	I_e	A	80
220 V	I_e	A	80
440 V	I_e	A	8
DC-3 operation			
60 V	I_e	A	80
110 V	I_e	A	80
220 V	I_e	A	80
440 V	I_e	A	5
DC-5 operation			
60 V	I_e	A	80
110 V	I_e	A	80
220 V	I_e	A	70
440 V	I_e	A	5

Current heat loss (3 pole)

Current heat loss at I_{th}		W	23
Impedance per pole		mΩ	0.7

Magnet systems

Voltage tolerance		x U_c	
AC operated 50 Hz	Pick-up	x U_c	0.8 - 1.1
AC operated 50/60 Hz		x U_c	0.85 - 1.1
Drop-out voltage AC operated	Drop-out	x U_c	0.4 - 0.6
DC operated	Pick-up	x U_c	0.7 - 1.2
DC operated	Drop-out	x U_c	0.2 - 0.6
Power consumption of the coil in a cold state and 1.0 x U_c			
AC operated 50/60 Hz	Pick-up	VA	150
AC operated 50/60 Hz	Pick-up	W	95
AC operated 50/60 Hz	Sealing	VA	16
AC operated 50/60 Hz	Sealing	W	4
DC operated	Pick-up	W	24
DC operated	Sealing	W	0,5
Duty factor		% DF	100
Switching times at 100 % U_c (approximate values)			
Main contacts			
AC operated			
Closing delay		ms	12 - 18
Opening delay		ms	8 - 13
DC operated		ms	
Closing delay		ms	54
Opening delay		ms	24
Arcing time		ms	10
Permissible residual current with actuation of A1 - A2 by the electronics (with 0 signal).		mA	≤ 1

Notes

At least double-pulse bridge rectifier

Technical data according to ETIM 4.0

Number of main contacts as N/Os			4
Rated operation current Ie at AC-1, 400 V			80
Connection type main circuit			Screw connection

Rated control voltage Us at AC 60HZ		V	120
Number of auxiliary contacts as N/Os			0
Rated control voltage Us at AC 50HZ		V	110
Number of auxiliary contacts as N/Cs			0
Suitable for rail-mounting			No
Rated control voltage Us at DC		V	0
Voltage type for actuation			AC
Rated operation current Ie at AC-3, 400 V		A	50
Number of N/Cs as main contact			0
Motor rating at AC-3, 400 V		kWh	22

Characteristics

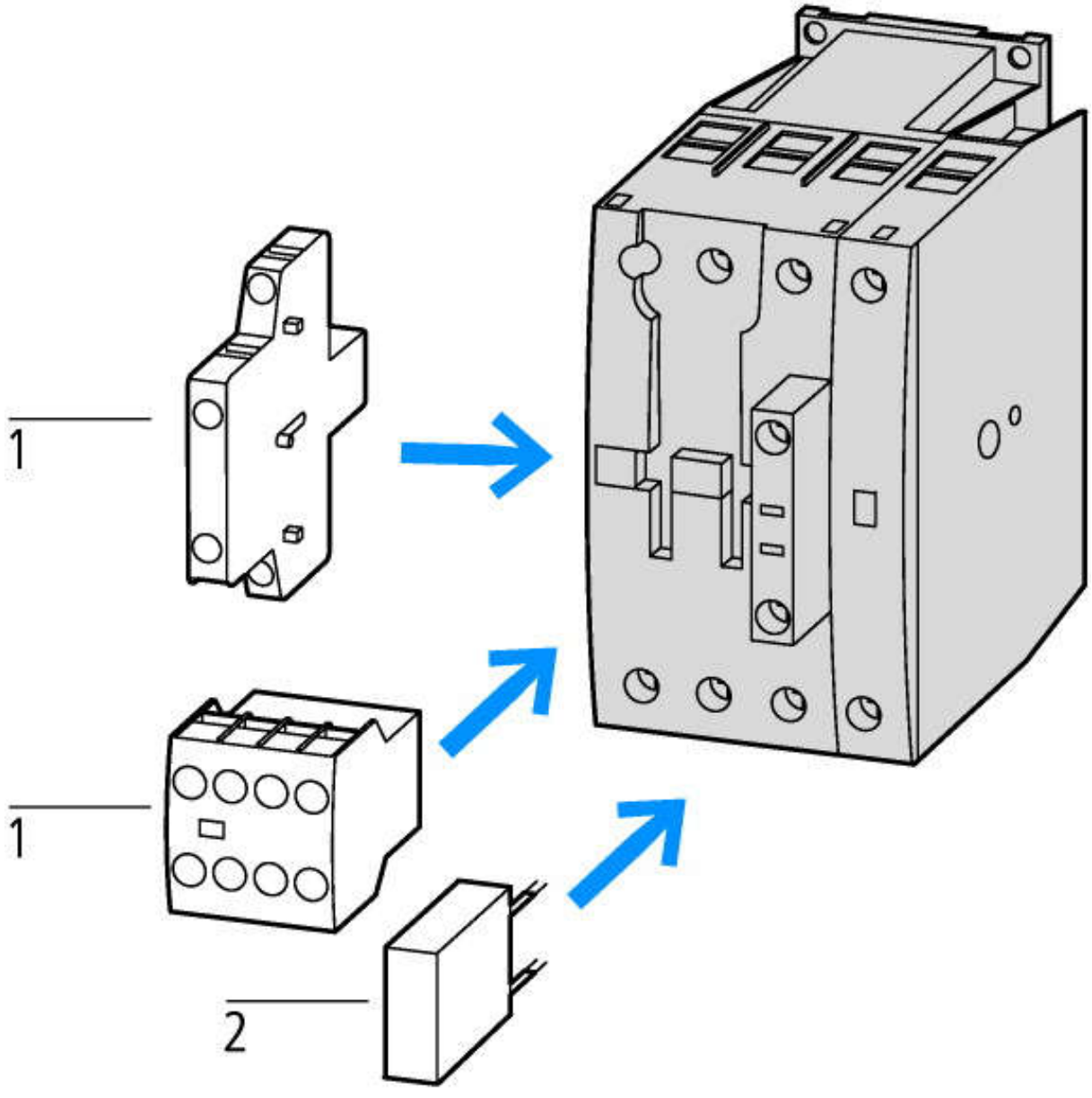

1: Auxiliary contact module
2: Suppressor

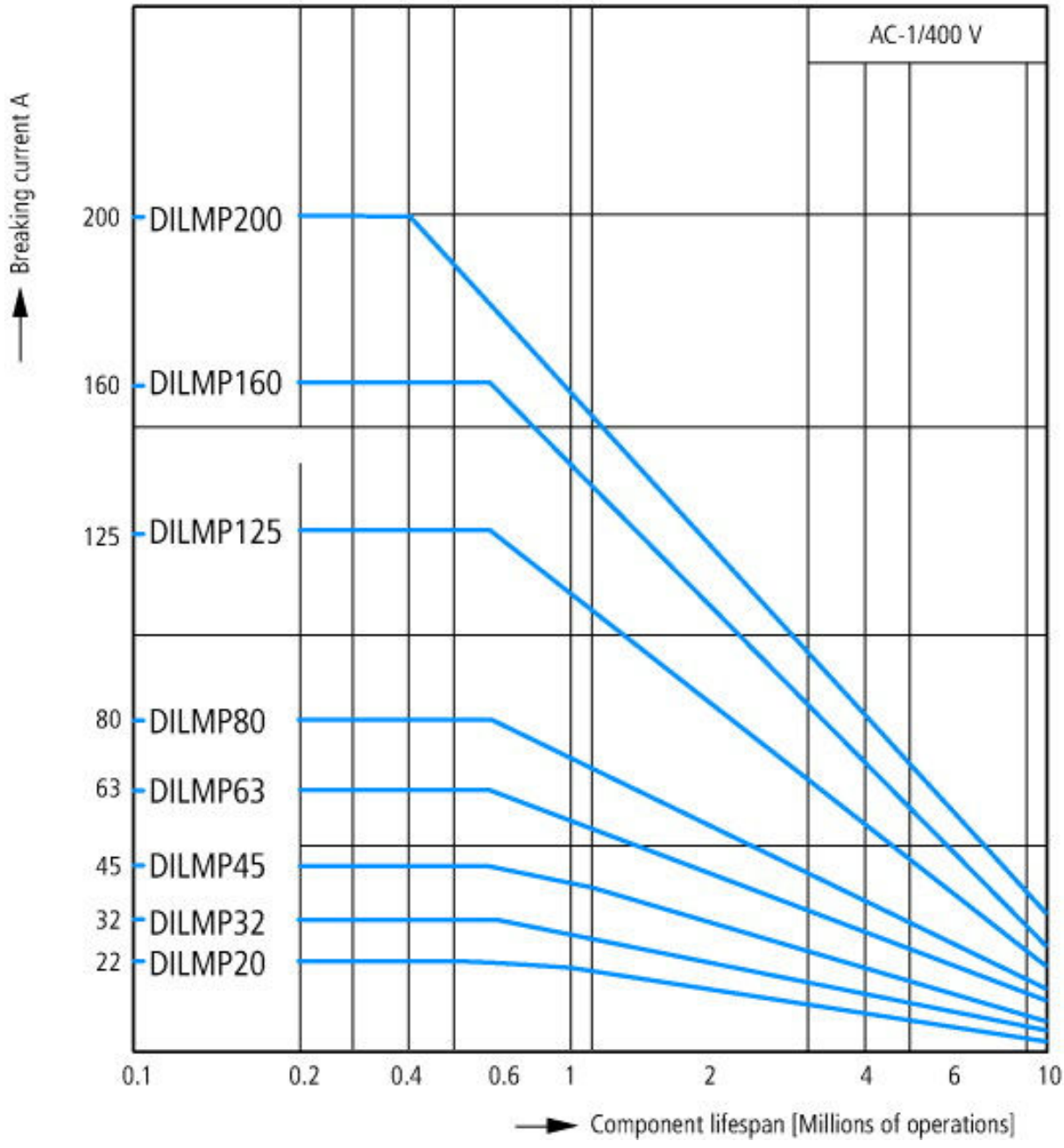

Operating characteristics
Non inductive and slightly inductive loads
Electrical characteristics
Switch on: 1 × rated operational current
Switch off: 1 × rated operational current
Utilization category
100 % AC-1
Typical examples of application
Electric heat

CAD-Data

Product standards CAD data:	http://eaton-moeller.partcommunity.com/PARTcommunity/Portal/eaton-moeller

Dimensions

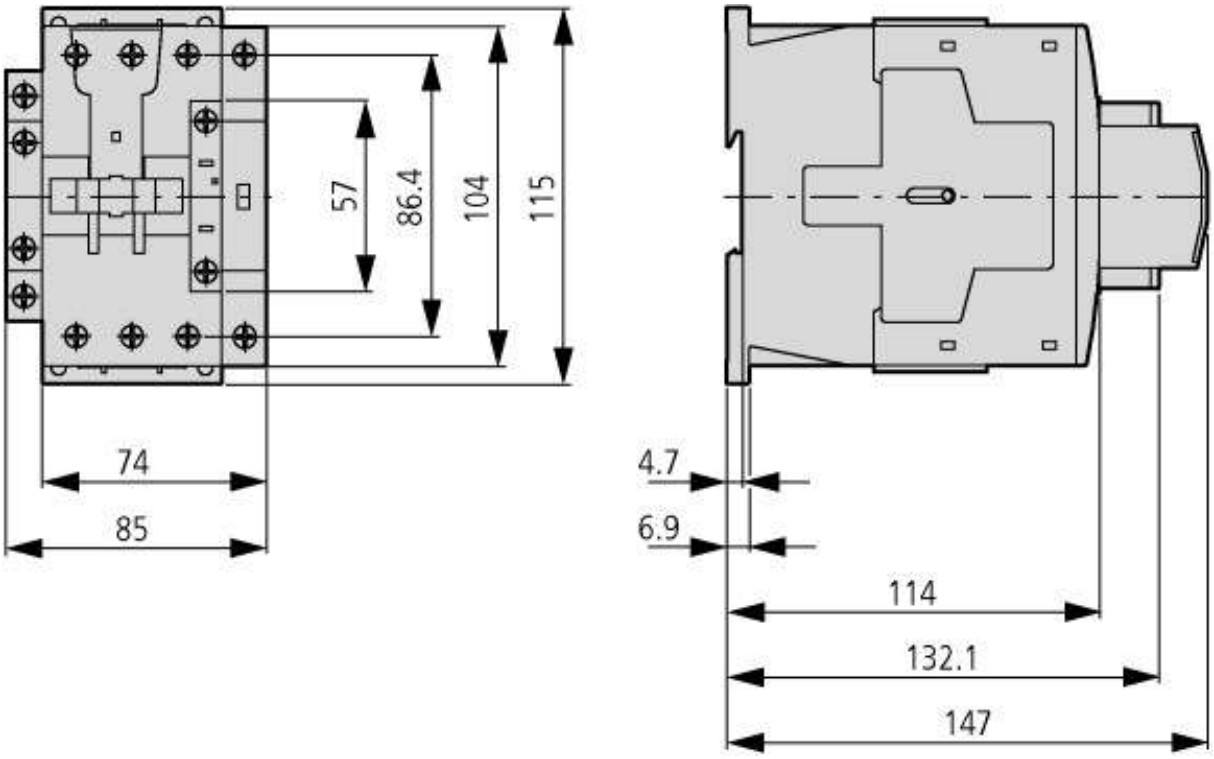

Contactors

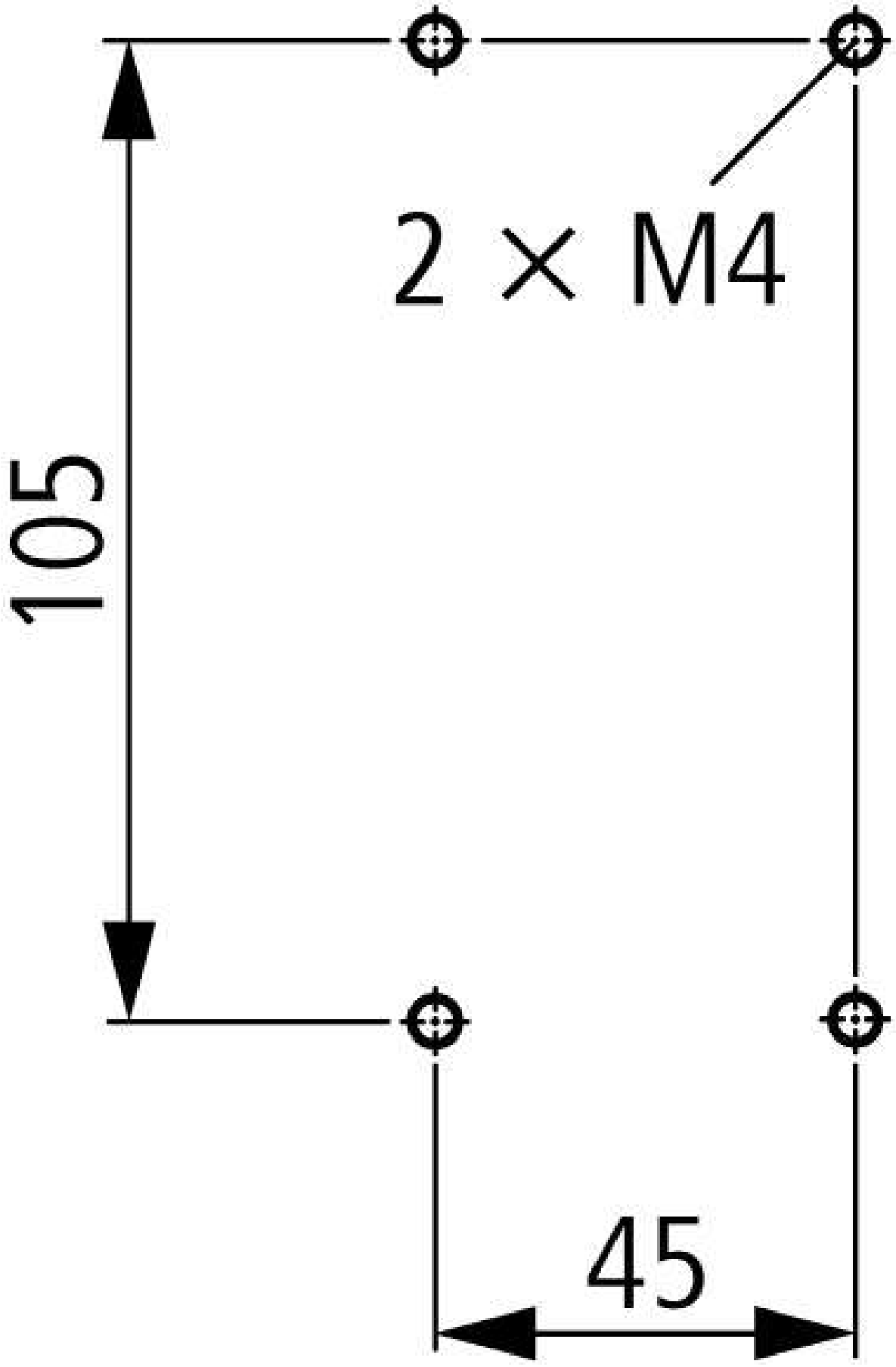

distance at side to earthed parts: 6 mm	
DILMP63 DILMP80	

Additional product information (links)

IL03407049Z (AWA2100-2356) 4-pole Contactor	ftp://ftp.moeller.net/DOCUMENTATION/AWA_INSTRUCTIONS/IL03407049Z2010_10.pdf
Installation Instructions	http://www.moeller.net/en/support/instructions_awa.jsp
Documentation	http://www.moeller.net/en/support/index.jsp

Motor starters and "Special Purpose Ratings" for the North American market	http://www.moeller.net/binary/ver_techpapers/ver953en.pdf
Busbar Component Adapters for modern Industrial control panels	http://www.moeller.net/binary/ver_techpapers/ver960en.pdf
The Interaction of Contactors with PLCs	http://www.moeller.net/binary/ver_techpapers/ver957en.pdf
Standard Compliant and Functionally Safe Engineering Design with Mechanical Auxiliary Contacts	http://www.moeller.net/binary/ver_techpapers/ver956en.pdf
Switchgear for Luminaires	http://www.moeller.net/binary/ver_techpapers/ver955en.pdf
Effect of the Cabel Capacitance of Long Control Cables on the Actuation of Contactors	http://www.moeller.net/binary/ver_techpapers/ver949en.pdf
X-Start - Modern Switching Installations Efficiently Fitted and Wired Securely	http://www.moeller.net/binary/ver_techpapers/ver938en.pdf
Mirror Contacts for Highly-Reliable Information Relating to Safety-Related Control Functions	http://www.moeller.net/binary/ver_techpapers/ver944en.pdf
X-Start - New Generation:100 years of Moeler contactors - Continous Progress-	http://www.moeller.net/binary/ver_techpapers/ver937en.pdf
Switchgear of Power Factor Correction Systems	http://www.moeller.net/binary/ver_techpapers/ver934en.pdf

© 07/2011 by Eaton Industries GmbH