# Datasheet - AZM 161SK-12/12RI-024-B1

Solenoid interlock / AZM 161I / AZM 161I-B1



(Minor differences between the printed image and the original product may exist!)

- Compact design
- Interlock with protection against incorrect locking.
- Individual coding
- Coding level "High" according to ISO 14119
- Double-insulated ⧈
- High holding force
- Long life
- 130 mm x 90 mm x 30 mm
- 1 Cable entry M 20 x 1.5
- Screw connection
- Manual release from side
- Particularly suitable for sliding doors

## Ordering details

| | |
|---|---|
| Product type description | AZM 161SK-12/12RI-024-B1 |
| Article number | 101213351 |
| EAN code | 4030661396002 |
| eCl@ss | 27-27-26-03 |

## Approval

| | |
|---|---|
| Approval | BG<br>USA/CAN<br>CCC |

## Classification

| | |
|---|---|
| Standards | EN ISO 13849-1 |
| $B_{10d}$ Normally-closed contact (NC) | 2.000.000 |
| Mission time | 20 Years |
| notice | $MTTF_d = \frac{B_{10d}}{0,1 \times n_{op}}$<br>$n_{op} = \frac{d_{op} \times h_{op} \times 3600\ s/h}{t_{cycle}}$ |

## Global Properties

| | |
|---|---|
| Product name | AZM 161I |
| Standards | EN 60947-5-1, BG-GS-ET-19 |
| Compliance with the Directives (Y/N) CE | Yes |
| Number of actuating directions | 3 piece |

| | |
|---|---|
| Active principle | electromechanical |
| - Individual coding | |
| - Coding level "High" according to ISO 14119 | |
| Duty cycle | Magnet 100 % |
| Materials | |
| - Material of the housings | glass-fibre reinforced thermoplastic, Plastic self-extinguishing, |
| - Material of the actuator | Stainless steel |
| - Material of the contacts | Silver |
| Housing coating | None |
| Weight | 490 g |

## Mechanical data

| | |
|---|---|
| Design of electrical connection | Screw connection |
| Cable section | |
| - Min. Cable section | 1 x 0,25 mm² |
| - Max. Cable section | 1 x 1.5 mm², flexible |
| Mechanical life | > 1.000.000 operations |
| notice | All indications about the cable section are including the conductor ferrules. |
| Emergency unlocking device (Y/N) | No |
| Manual release (Y/N) | Yes |
| Emergency release (Y/N) | No |
| Latching force | 30 N |
| Positive break force | 20 N |
| positive break travel | 10 mm |
| Clamping force F | 2000 N |
| Max. Actuating speed | 2 m/s |
| Minimum actuating radius | 150 mm |
| Actuating frequency | max. 1000 / h |

## Ambient conditions

| | |
|---|---|
| Ambient temperature | |
| - Min. environmental temperature | −25 °C |
| - Max. environmental temperature | +60 °C |
| Protection class | IP67 to IEC/EN 60529 |

## Electrical data

| | |
|---|---|
| Design of control element | Normally open contact (NO), Opener (NC) |
| Switching principle | Creep circuit element |
| Number of auxiliary contacts | 2 piece |
| Number of safety contacts | 4 piece |
| Power to unlock | Yes |
| Power to lock | No |
| Rated control voltage $U_s$ | 24 VAC/DC |
| Power consumption | max. 10 W |
| Rated impulse withstand voltage $U_{imp}$ | 4 kV |
| Rated insulation voltage $U_i$ | 250 V |
| Thermal test current $I_{the}$ | 6 A |
| Utilisation category | AC-15: 230 V / 4 A<br>DC-13: 24 V / 2,5 A |
| Max. fuse rating | 6 A gG D-fuse To DIN EN 60269-1 |

## ATEX

| | |
|---|---|
| Explosion protection categories for gases | None |
| Explosion protected category for dusts | None |

## Miscellaneous data

| | |
|---|---|
| Applications |  sliding safety guard,<br> removable guard,<br> hinged safety guard |

## Dimensions

| | |
|---|---|
| Dimensions of the sensor | |
| - Width of sensor | 130 mm |
| - Height of sensor | 90 mm |
| - Length of sensor | 30 mm |

## notice

On hinged guards, minimum actuating radius at 90° to the plane of the actuator 180 mm
minimum actuating radius on hinged guards in line with the plane of the actuator 150 mm
**The actuator is not available separately.**
The axis of the hinge should be 5 mm above the top edge of the safety switch and in the same plane
Manual release

- For manual release using M5 triangular key, available as accessory
- For maintenance, installation, etc.

## Included in delivery

Included in delivery

- Individually coded actuator
- tamperproof screws
- Slot sealing plugs

## Diagram

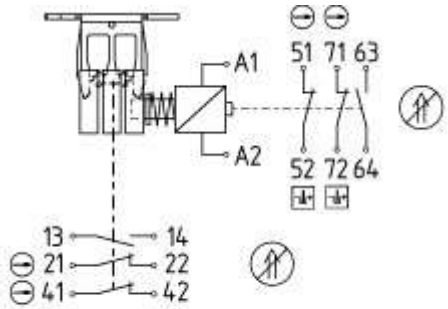


| 13 | 14 | 21 | 22 | 41 | 42 | 51 | 52 | 63 | 64 | 71 | 72 | A1 | A2 |
|---|---|---|---|---|---|---|---|---|---|---|---|---|---|

Note Diagram

⊖ positive break NC contact

⇑ active

no active
Normally-open contact
Normally-closed contact

## Switch travel diagram

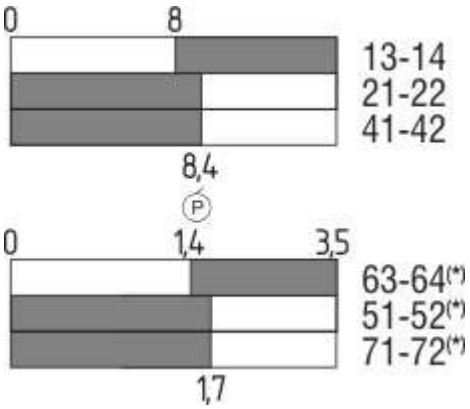


Notes Switch travel diagram
Contact closed
Contact open
Setting range
Break point
Positive opening sequence/- angle
**VS** adjustable range of NO contact
**VÖ** adjustable range of NC contact
**N** after travel

## Ordering suffix

*The applicable ordering suffix is added at the end of the part number of the safety switch.*
Order example: AZM 161SK-12/12RI-024-B1**-1637**

| | |
|---|---|
| ...**-1637** | 0,3 µm gold-plated contacts |

## Documents

**Operating instructions and Declaration of conformity** (en) 562 kB, 20.01.2016
Code: mrl_azm161i_en

**Operating instructions and Declaration of conformity** (jp) 767 kB, 12.04.2016
Code: mrl_azm161i_jp

**Operating instructions and Declaration of conformity** (nl) 511 kB, 15.08.2012
Code: mrl_azm161i_nl

**Operating instructions and Declaration of conformity** (da) 504 kB, 27.08.2012
Code: mrl_azm161i_da

**Operating instructions and Declaration of conformity** (de) 565 kB, 20.01.2016
Code: mrl_azm161i_de

**Operating instructions and Declaration of conformity** (pl) 589 kB, 06.04.2016

Code: mrl_azm161i_pl

**Operating instructions and Declaration of conformity** (es) 444 kB, 09.03.2016
Code: mrl_azm161i_es

**Operating instructions and Declaration of conformity** (pt) 573 kB, 27.04.2017
Code: mrl_azm161i_pt

**Operating instructions and Declaration of conformity** (sv) 498 kB, 27.08.2012
Code: mrl_azm161i_sv

**Operating instructions and Declaration of conformity** (cs) 586 kB, 19.04.2016
Code: mrl_azm161i_cs

**Operating instructions and Declaration of conformity** (it) 562 kB, 19.04.2016
Code: mrl_azm161i_it

**Operating instructions and Declaration of conformity** (fr) 567 kB, 28.04.2016
Code: mrl_azm161i_fr

**EAC certification** (ru) 809 kB, 05.10.2015
Code: q_6040p17_ru

## Images




Product photo

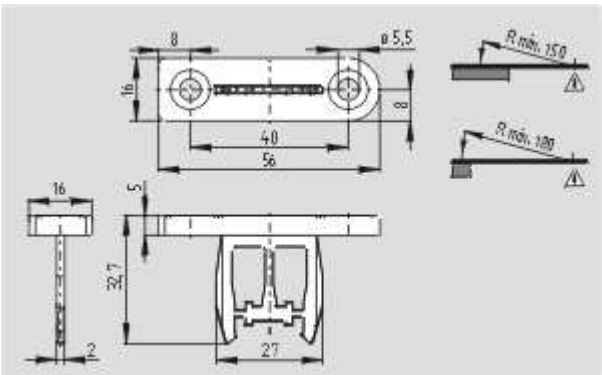


Dimensional drawing (miscellaneous)

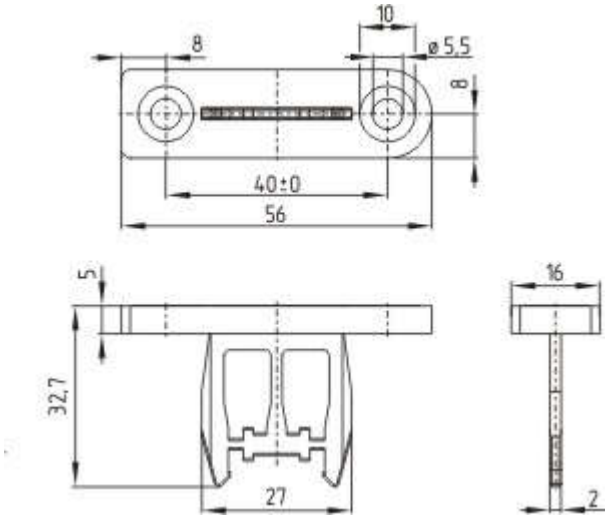

Dimensional drawing (miscellaneous)

---

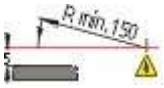

Actuating radius

---

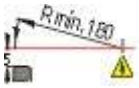

Actuating radius

---

K.A. Schmersal GmbH & Co. KG, Möddinghofe 30, D-42279 Wuppertal
The data and values have been checked throroughly. Technical modifications and errors excepted.
Generiert am 05.10.2017 - 11:09:06h Kasbase 3.2.7.F.64I