Gate Bolt for Tongue and Locking Switches

GBA-1, GBA-1-SS, GBL-1 and GBL-1-SS

Gate Bolt with Optional Instant Rear Escape Release



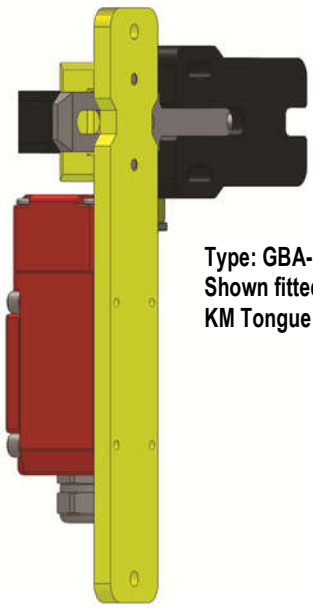

Type: GBA-1
Shown fitted with KM Tongue Switch.

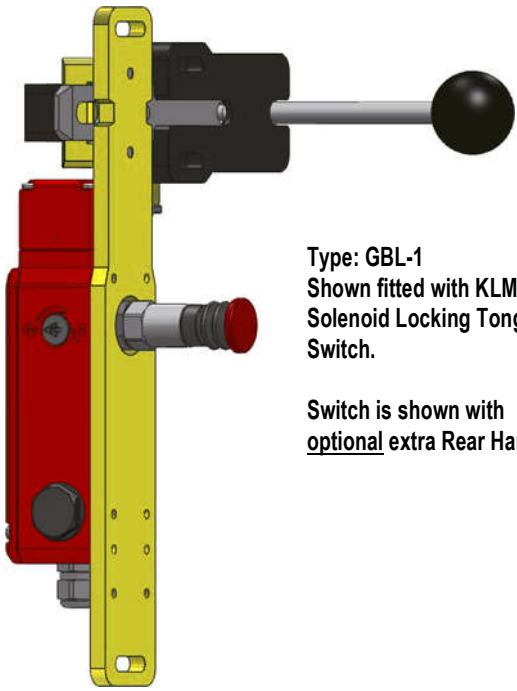

Type: GBL-1
Shown fitted with KLM-RR Solenoid Locking Tongue Switch.

Switch is shown with optional extra Rear Handle.

IMPORTANT NOTE:

Read and understand these instructions before installing, operating, or maintaining this equipment.

The product is designed to be a component of a customised safety orientated control system. It is the responsibility of the user to ensure the correct overall functionality of its systems and machines. IDEM, its subsidiaries and affiliates, are not in a position to guarantee all of the characteristics of a given system or product not designed by IDEM.

APPLICATION:

IDEM GBA-1, GBL-1, GBA-1-SS and GBL-1-SS Gate Bolts when used with an IDEM Tongue or Locking Switch provide interlocking of the guard but ensure that unintentional re-start is prevented by the need to carry out a deliberate action of sliding and then re-latching of the Gate Bolt handle.

Optional extras: Rear Sliding Handle – allows instant release from the rear of the guard to prevent operators becoming trapped in the hazardous area.
Spring Loaded Catch – can be fitted to prevent accidental closing of the handle, this has to be manually operated following opening of the guard and therefore prevents accidental closing of the guard.

Whether opening the guard normally from the front (by using the handle) or by initiating the instant release by sliding the rear handle from inside the hazard zone the handle needs to be re-latched before the machine can be re-started.

In conjunction with a Risk Assessment (ISO12100-1 / ISO12100-2) they can be used to eliminate the risk of operators becoming accidentally trapped inside a guarded area.

BENEFITS:

- Robust metal construction.
- Over 30mm (1¼") adjustability (handle bracket and switch bracket mounting holes are slotted) to compensate for varying door gaps.
- Stainless steel guide prevents accidental closure, keeps safety switches properly aligned and acts as door latch.
- All individual pieces are replaceable if damaged (handle, guide, individual brackets, etc.).
- Switch brackets are pre-drilled.

Available in two sizes to accommodate short or long version tongue switches.
Rugged metal or Stainless Steel construction, providing shearing forces up to 5,000 Newtons on large hinged doors.
Easy to install on hinged or sliding guards (4 x M6 Mounting Bolts).
Once installed there is no need for extra brackets or door handles.
Not susceptible to misalignment damage.
Operators are required to manually close the guard, they cannot close accidentally.
Padlock holes are provided as a means of locking open the handle and preventing the guard from being closed and the machine started during maintenance operations.

Supplied with Handle and Flat Actuator (Type F).

Optional Accessories (which can be fitted later after installation):
Rear Handle: Where there is a requirement to move/operate the handle from inside the guarded area.
Spring Loaded Catch: To prevent accidental actuation after opening of the handle.

MAINTENANCE:

Every month: Check for signs of mechanical damage and wear. Replace any part showing damage.

Gate Bolt for Tongue and Locking Switches

Types: GBL-1 and GBA-1

SALES NUMBER	MODEL	SUITABILITY
210001	Gate Bolt Lock LH GBL-1	Suitable for Switch Types: KLP KLM KLM-RR KL4SS
210002	Gate Bolt Lock RH GBL-1	
210003	Gate Bolt Tongue LH GBA-1	Suitable for Switch Type: KM
210004	Gate Bolt Tongue RH GBA-1	
210005	Rear Handle	Suitable for GBA-1 and GBL-1
210006	Spring Loaded Catch	Suitable for GBA-1 and GBL-1

Types: GBL-1-SS and GBA-1-SS

SALES NUMBER	MODEL	SUITABILITY
211001	Gate Bolt Lock LH GBL-1-SS	Suitable for Switch Types: KL3-SS KL3-SS-RR KL4-SS
211002	Gate Bolt Lock RH GBL-1-SS	
211003	Gate Bolt Tongue LH GBA-1-SS	Suitable for Switch Type: KM-SS
211004	Gate Bolt Tongue RH GBA-1-SS	
210005	Rear Handle	Suitable for GBA-1-SS and GBL-1-SS
211006	Spring Loaded Catch Stainless Steel	Suitable for GBA-1-SS and GBL-1-SS



Type: GBA-1-SS
Shown fitted with KM-SS
Stainless Steel 316 Tongue Switch



Type: GBL-1-SS
Shown fitted with KL3-SS
Stainless Steel 316 Solenoid Locking Tongue Switch

Types: GBL-1 & GBL-1-SS
All dimensions shown in mm

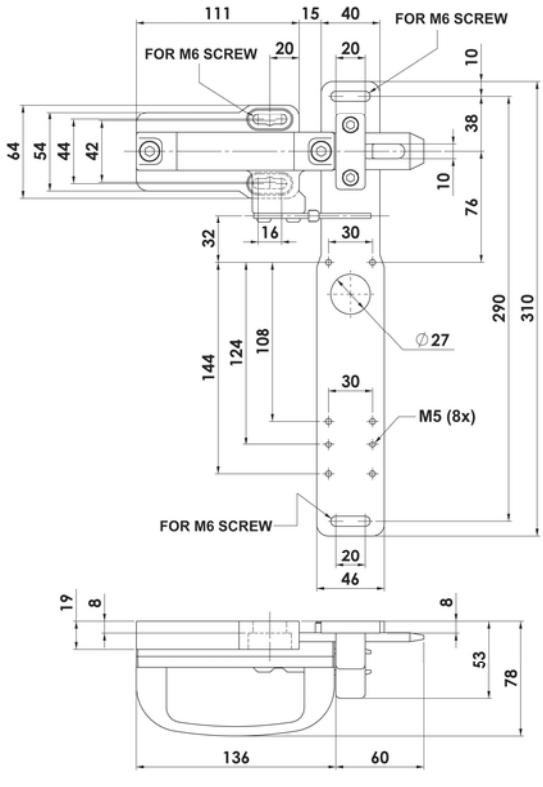

Types: GBA-1 & GBA-1-SS
All dimensions shown in mm

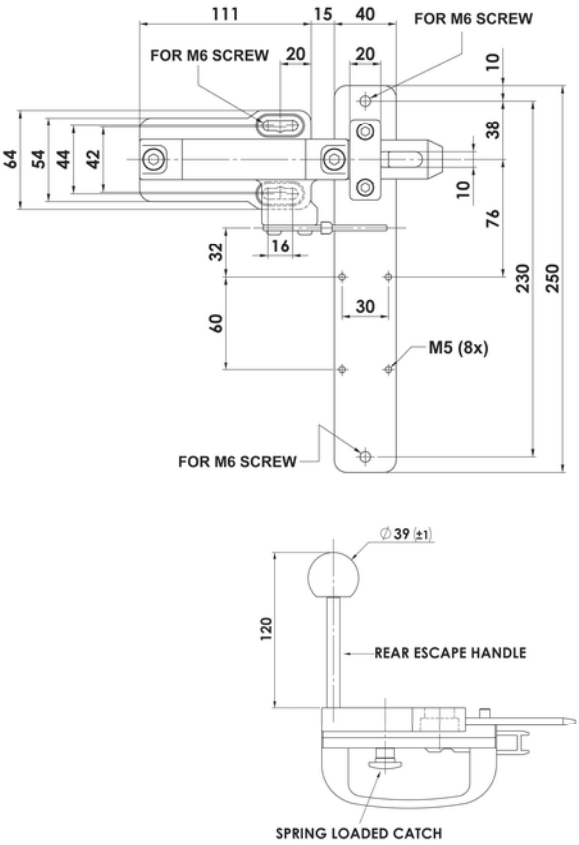

IDEM SAFETY SWITCHES Ltd., 2 Ormside Close, Hindley Industrial Estate, Hindley Green, Wigan, WN2 4HR UK. Tel: +44 (0)1942 257070 Fax.: +44 (0)1942 257076
IDEM (USA) 4416 Technology Drive, Fremont, CA 94538, USA. Tel:510-445-0751 Fax:1866-431-7064 email: sales@idemsafety.com Web: www.idemsafety.com

Doc: 102558
Aug 2017