Datenblatt - Fiche technique - Data sheet

26.11.0358



ROLINE Kat.6 Keystone, geschirmt, werkzeuglos, silberfarben

ROLINE Keystone Cat.6, blindé, sans outil, argent

ROLINE Cat.6/Class E Keystone Jack, RJ-45, shielded, toolless, silver

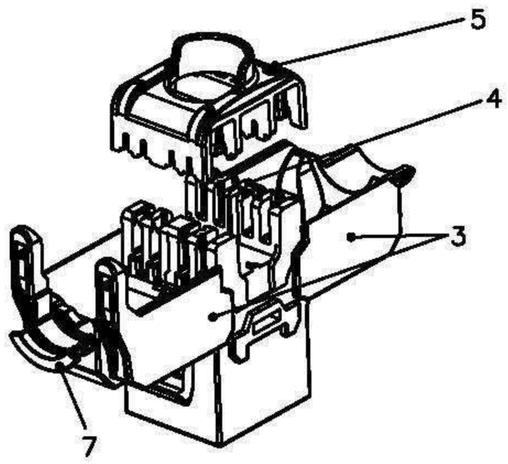

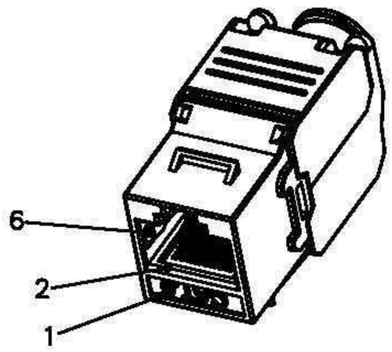

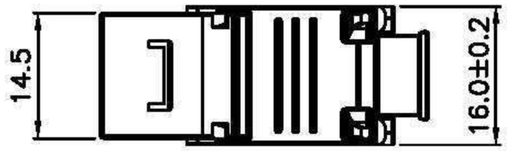

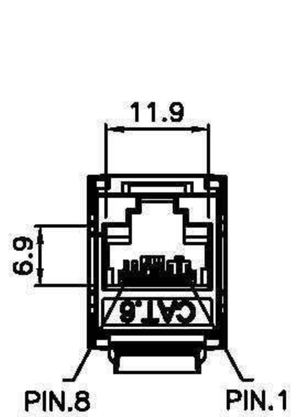

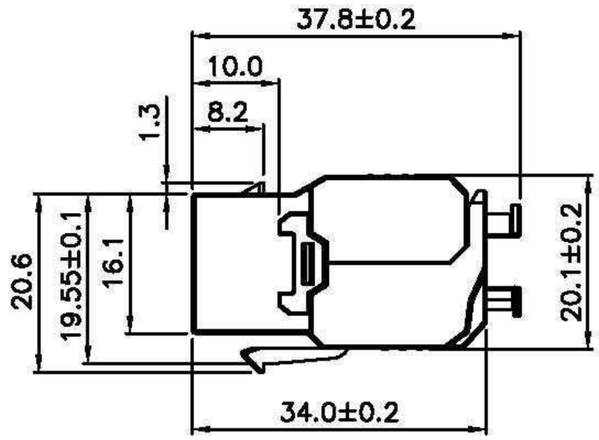

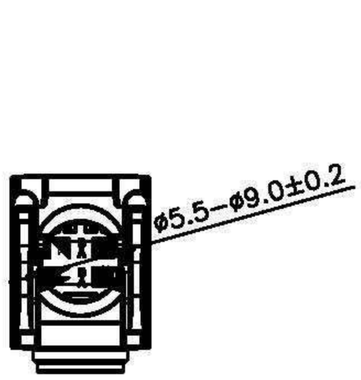

Specification :

Material :
1. RJ45 Jack :
   1–1. Housing : Zinc Die–Casting with Nickel plated.
   1–2. Contact Bracket : PC, UL 94–V2, Transparent color.
2. RJ45 Jack Contact :
   2–1. Material : Phosphor Bronze with Nickel plated.
   2–2. Finish : 50 micro–inch Gold plated on Plug contact area.
3. Cap A&B : Zinc Die–Casting with Nickel plated.
4. IDC :
   4–1. Housing : PC+Glass Fiber, Grey color(RAL7035), UL 94–V2.
   4–2. Terminal : Phosphor Bronze with Tin plated.
5. IDC Cap : PC+Glass Fiber, White color, UL 94–V2.
6. Clip : Stainless Steel.
7. Grounding Contact : Zinc Die–Casting with Nickel plated.
8. PCB : FR4, UL 94–V0.

Performance :
a. T568A & T568B wiring.
b. Insertion Force : 30N max. (IEC 60603–7–5).
c. Retention Strength : 7.7 kg between Jack and Plug.
d. Operating Temperature : –10°C to 60°C. (ISO/IEC 11801, ANSI/TIA/EIA 568 B.2).
e. Life(mating cycles) :
   e–1. Jack : 750 cycles min. (ISO/IEC 11801, IEC 60603–7–5).
   e–2. IDC : Suitable for 23–26 AWG stranded and solid wire, compatible with both 110 & Krone punch down tool.
   e–3. Tool–less : When using the IDC Cap for wire management.
f. The Cat.6 transmission performance is in compliance with the ANSI/TIA/EIA 568 B.2–1 standard.

GENERAL TOLERANCE OF DIMENSIONS				
X.XXX ±0.005	DRAWING	12.APR.2011	CHP	Rotronic Co., Ltd.
X.XX ±0.05	CHECK	12.APR.2011	DAY	
X.X ±0.1	APPROVAL	12.APR.2011	JAIMY	
		DATE	NAME	Item No.: 26.11.0358
	SCALE 1/1 (A4)	UNIT	mm	ROLINE Cat. 6 Shielded Keystone Jack
	DRAWING CLASSIFICATION	S	SHEET 1 OF 1	A2