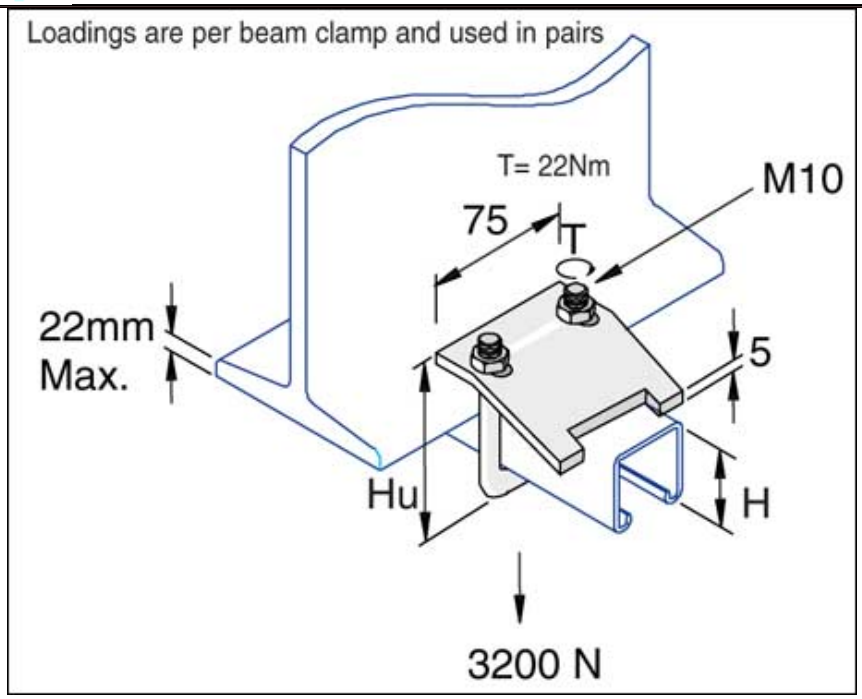

Part No.	Finish	Size	Hu (mm)	Weight	Box Qty
P2785	HG	21-41mm	86	0.36	25
P2786	HG	62-83mm	127	0.40	25
P2787	HG	124mm	171	0.00	25
P2788	HG	164mm	209	0.00	25
P2785	SS	21-41mm	86	0.26	25
P2786	SS	62-83mm	127	0.26	25

Project: A

Architect / Engineer: B

Date: C **Phone:** D

Contractor: E

Address: F

Notes 1: G

Approval Stamp: