MINISTART
Phase Controller
IN 9017

0260595

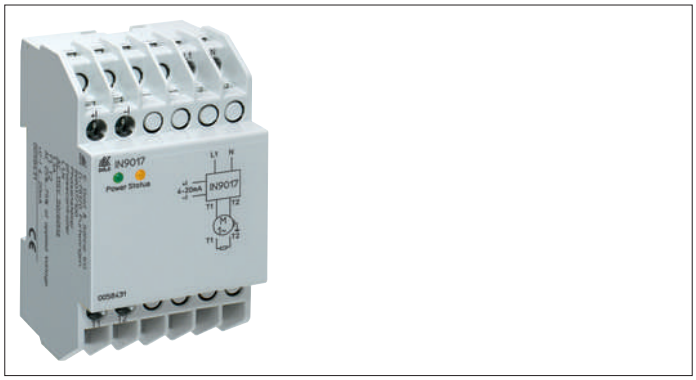

- Phase controller for resistive and motor load
- For permanent power up to 300 W
- Interference suppression limit value class B
- LED indication
- Devices available in 3 versions:
  IN 9017/100: With current interface 4 ... 20 mA and broken wire detection
  IN 9017/200: With voltage interface 0 ... 10 V
  IN 9017/211: With voltage interface 0 ... 10 V, U_{min} adjustable, control input for max. output current
- Width: 53 mm

Block Diagrams

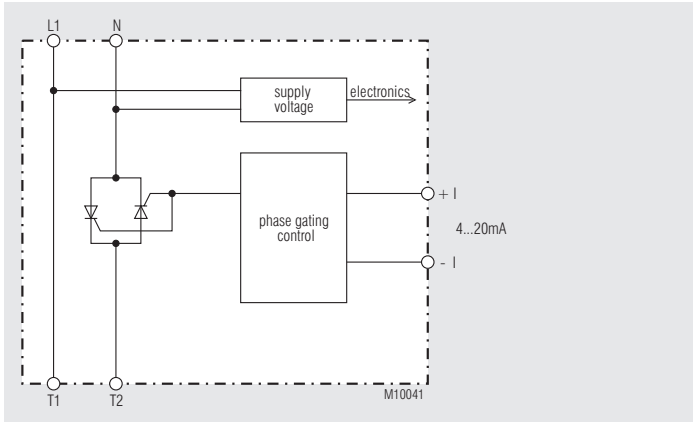

IN 9017/100

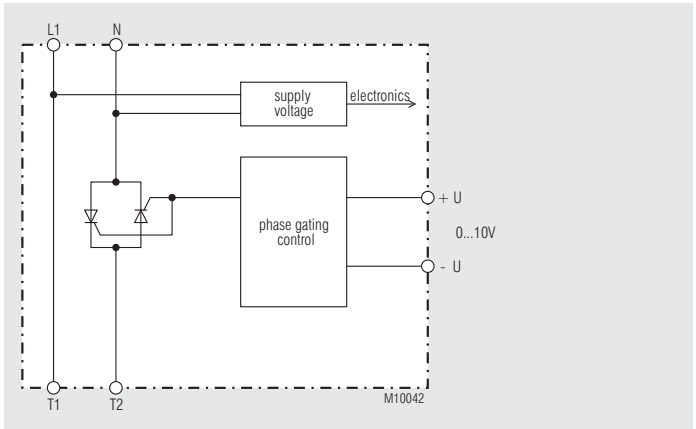

IN 9017/200

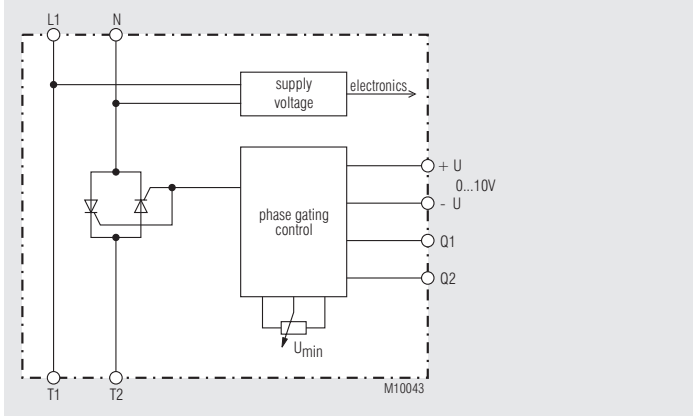

IN 9017/211

Approvals and Markings

CE

Application

- Resistive load
- Infrared heating
- Fan
- Volume compressor

Function

Phase controllers robust electronic units to control the voltage by phase chopping. The Phase chopping angle is adjusted on a control input. (IN 9017/100: 4 ... 20 mA, IN 9017/200: 0 ... 10 V) verstellt.

The variant IN 9017/211 is realised with 0…10V input and voltfree contact input Q1, Q2.
When contact input Q1, Q2 is open the output remains off at 0-3 V. With 3V control voltage the voltage adjusted on potentiometer Umin is switched on. When rising the control voltage continuously up to 10 V on the input, the output voltage increases up to AC 230 V. By closing the contact on Q1,Q2 the the output supplies the max. voltage.

Indication

LED green:	Supply voltage is present
LED yellow	
at IN 9017/100:	Permanent on, when control current > 4 mA flashes 1 time, when control current < 4 mA (cable break) flashes 2 times, when mains frequency is outside limits
at IN 9017/200:	Permanent on, when full voltage on motor is present flashes 1 time, when phase gating is active flashes 2 times, when mains frequency is outside limits
at IN 9017/211:	Permanent on, when full voltage on motor is present flashes 1 time, when phase gating is active flashes 2 times, when mains frequency is outside limits flashes 3 times, when setpoint < 3 volt and Q_1, Q_2 are open

All technical data in this list relate to the state at the moment of edition. We reserve the right for technical improvements and changes at any time.

Notes

If the power semiconductor should be protected against short circuit or ground fault during operation a semiconductor fuse needs to be installed (see technical details). If not the standard line protection fuses must be used. The phase controller must not be operated with capacitive load on the output. To provide safety for people and equipment, only trained staff must work on this unit.

Technical Data

Motor voltage

IN 9017/100:	AC 48 V	±10 %
IN 9017/100:	AC 115 V	±10 %
IN 9017/100:	AC 230 V	±10 %
IN 9017/200:	AC 115 V	±10 %
IN 9017/200:	AC 230 V	±10 %
IN 9017/211:	AC 230 V	±10 %
Nominal frequency:	50 / 60 Hz	
Nominal load P_N:	300 W at AC 230 V 150 W at AC 115 V	
Min. power:	Approx. 0.1 P_N	
Rated current:	1.3 A	
Semiconductor fuse:	Max. 340 A^2s	
Setting range output voltage		
IN 9017/100:	AC 48 V	AC 12 ... 36 V
IN 9017/100:	AC 115 V	AC 29 ... 86 V
IN 9017/100:	AC 230 V	AC 58 ... 172 V
IN 9017/200:	AC 115 V	AC 20 ... 115 V
IN 9017/200:	AC 230 V	AC 40 ... 230 V
IN 9017/211:	AC 230 V U_{min} AC 80 ... 200 V	AC U_{min} ... 230 V
Recovery time:	200 ms	
Consumption:	1.4 VA	
Control input		
IN 9017/100:	4 ... 20 mA	R_i = 82.5 Ω
IN 9017/200:	0 ... 10 V	R_i = 50 kΩ
IN 9017/211:	0 ... 10 V Q_1, Q_2, volt free	R_i = 50 kΩ

General Data

Nominal operating mode:	Continuous operation	
Temperature range:	0 ... + 55 °C	
Storage temperature:	- 25 ... + 75 °C	
Clearance and creepage distance		
Rated impulse voltage / pollution degree:	4 kV / 3	IEC 60664-1
EMC		
Electrostatic discharge:	8 kV (air)	IEC/EN 61000-4-2
HF irradiation:	10 V/m	IEC/EN 61000-4-3
Fast transients:	2 kV	IEC/EN 61000-4-4
Surge voltage between		
wires for power supply:	1 kV	IEC/EN 61000-4-5
between wire and ground:	2 kV	IEC/EN 61000-4-5
HF-wire guided:	10 V	IEC/EN 61000-4-6
Interference suppression:	Limit value class B	EN 55011
Degree of protection		
Housing:	IP 40	IEC/EN 60529
Terminals:	IP 20	IEC/EN 60529
Housing:	Thermoplastic with VO behaviour according to UL subject 94	
Vibration resistance:	Amplitude 0.35 mm frequency 10 ... 55 Hz,	IEC/EN 60068-2-6
Climate resistance:	0 / 055 / 04	IEC/EN 60068-1
Terminal designation:	EN 50005	
Wire connection:	2 x 2.5 mm^2 solid or 2 x 1.5 mm^2 stranded wire with sleeve DIN 46228-1/-2/-3/-4	
Wire fixing:	Flat terminals with self-lifting clamping piece	IEC/EN 60999-1
Mounting:	DIN-rail	IEC/EN 60715
Weight:	210 g	

Dimensions

Width x height x depth:	53 x 90 x 61 mm

Standard Types

IN 9017/100 AC 48 V 75 W
Article number:: 0062206

IN 9017/100 AC 115 V 150 W
Article number:: 0058431

IN 9017/100 AC 230 V 300 W
Article number:: 0065838

IN 9017/200 AC 115 V 150 W
Article number:: 0065592

IN 9017/200 AC 230 V 300 W
Article number:: 0058274

IN 9017/211 AC 230 V 300 W
Article number:: 0059425

Set-up Procedure

1. Wiring of the component according to connection example
2. Adjust required output voltage

Safety remarks

- Never clear fault when the device is switched on
- The user must ensure that the device and the necessary componentsare mounted and connected according to the locally applicable regulations and technical standards.
- After disconnection of the device dangerous voltages may be sensedfor several minutes on the connection terminals caused by filter capacitors.

Attention: This device can be started by potential-free contact, while connected directly to the mains without contactor Please note, that the load is not physically separated from the mains. Because of this the load must be disconnected from the mains via the corresponding manual motor starter.

Control Characteristics

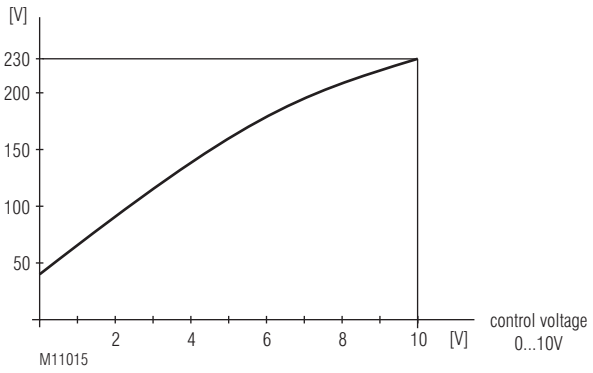

IN 9017/200 AC 230 V

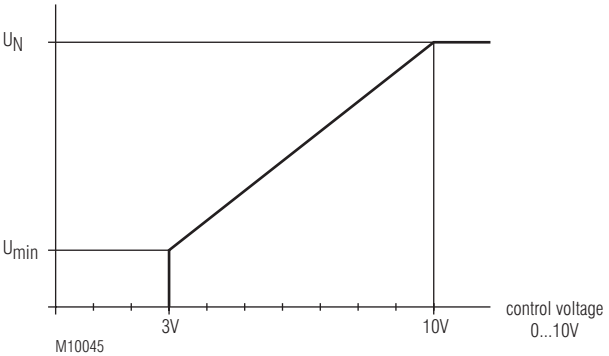

IN 9017/211

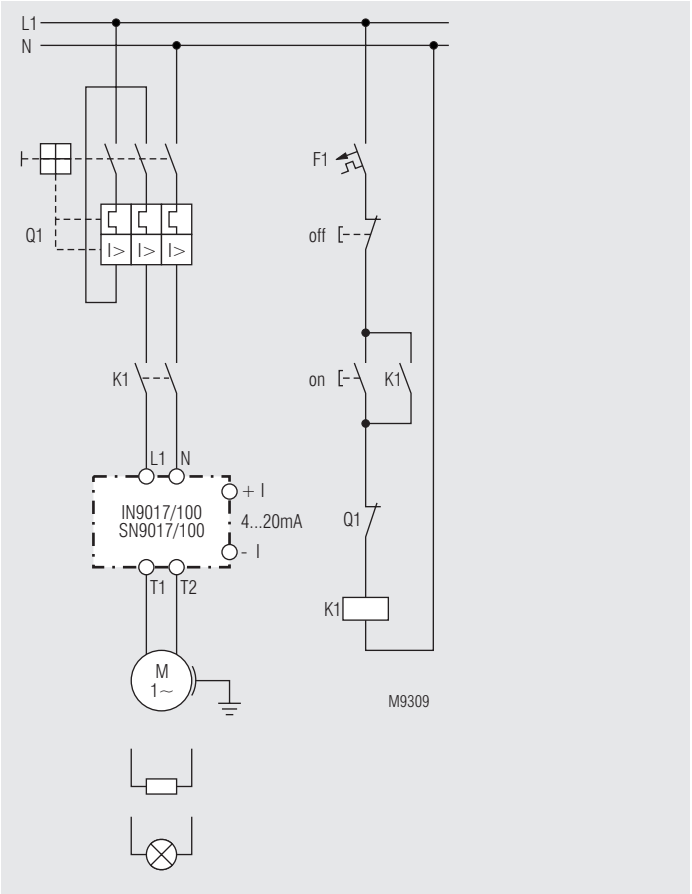

IN 9017/100

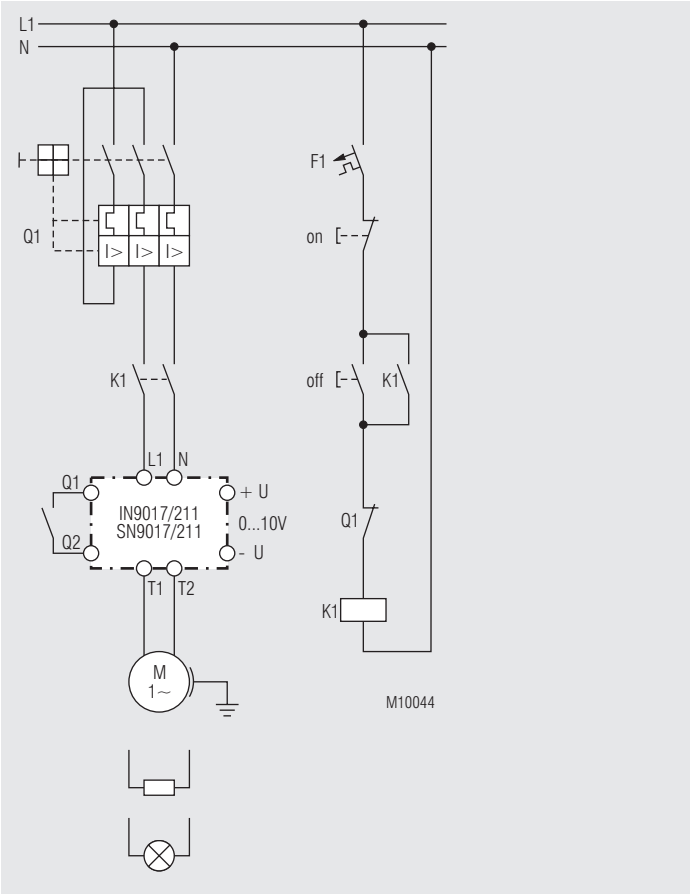

IN 9017/211

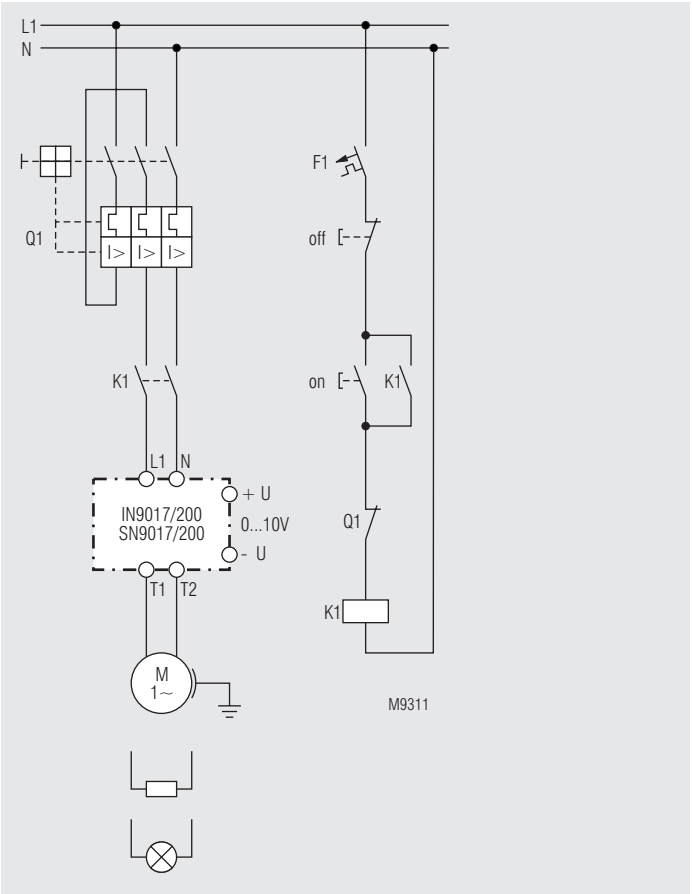

IN 9017/200