

Encoder WDGN 58A

www.wachendorff-automation.com/wdgn58a

Wachendorff Automation

... systems and encoders

- Complete systems
- Industrial rugged encoders to suit your application
- Standard range and customer versions
- Maximum permissible loads
- 48-hour express production
- Made in Germany
- Worldwide distributor network

IndustrieROBUST

Encoder WDGN 58A configurable via NFC



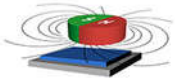

Wachendorff Apps WDGN

- Due to high quality electronics any number of pulses up to 16384 configurable via NFC
- HTL/TTL configurable via NFC
- Protection class IP67, at shaft input IP65
- High output frequency up to 1 MHz
- Reverse polarity protection and short-circuit protection at 4.75 VDC to 32 VDC

www.wachendorff-automation.com/wdgn58a

Configurable via NFC

Resolution	
Pulses per revolution PPR	1 PPR up to 16384 PPR

Mechanical Data	
Housing	
Flange	synchro flange
Flange material	aluminum
Housing cap	Stainless steel, NFC cover: Thermoplastic polyamide
Housing	Ø 58 mm
Shaft(s)	
Shaft material	stainless steel
Starting torque	approx. 1 Ncm at ambient temperature
Shaft	Ø 6 mm
Shaft length	L: 12 mm
Max. Permissible shaft loading radial	125 N
Max. Permissible shaft loading axial	120 N
Shaft	Ø 10 mm
Shaft length	L: 20 mm
Max. Permissible shaft loading radial	220 N
Max. Permissible shaft loading axial	120 N
Bearings	
Bearings type	2 precision ball bearings
Nominale service life	1 x 10'9 revs. at 100 % rated shaft load 1 x 10'10 revs. at 40 % rated shaft load 1 x 10'11 revs. at 20 % rated shaft load
Max. operating speed	8000 rpm

Machinery Directive: basic data safety integrity level	
$MTTF_d$	1200 a
Mission time (TM)	25 a
Nominale service life (L10h)	1 x 10'11 revs. at 20 % rated shaft load and 8000 rpm
Diagnostic coverage (DC)	0 %

Electrical Data	
Power supply/Current consumption	4,75 VDC up to 32 VDC: typ. 80 mA
Output circuit	HTL HTL, inv. TTL TTL, RS422 compatible, inv.
Pulse frequency	HTL up to 16384 ppr: max. 600 kHz TTL up to 16384 ppr: max. 1 MHz
Channels	ABN CH4 and inverted signals
Load	max. 40 mA / channel
Circuit protection	inverse-polarity and short-circuit protection
Nullimpuls setzen:	Setzen: SET = +UB für 2 s Deaktiviert: SET = GND
Accuracy	
Phase offset	90° ± max. 8.5 % of the period duration
pulse-/pause-ratio	50 % ± max. 7 %

Configurable via NFC:	
BASIC: (BAS)	
Channels:	ABN and inverted
HTL / TTL	freely selectable
Pulses / revolution:	1 ppr up to 16384 ppr freely selectable
Advanced (ADV):	
Channels:	ABN + CH4 and inverted
HTL / TTL:	freely selectable
Pulses / revolution:	1 ppr up to 16384 ppr freely selectable
Number of pulses for each channel:	individually selectable
Set zero pulse:	yes
Pulse width and position:	Width and position adjustable

Environmental data	
Noise immunity:	
ESD (DIN EN 61000-4-2):	8 kV
EMC: (DIN EN 61000-4-3):	10 V/m
Burst (DIN EN 61000-4-4):	2 kV
High frequency fields (DIN EN 61000-4-6):	10 V
Surge (DIN EN 61000-4-5):	2 kV
Radio interference:	According DIN EN 55011
NFC:	

EMC:	According ETSI EN 301 489
RED:	According ETSI EN 300 330
Electrical safety:	According DIN EN 61010-1, UL 61010-1, CSA C22.0 No. 61010-1-12
Vibration: (DIN EN 60068-2-6)	300 m/s² (10 Hz up to 2000 Hz)
Shock: (DIN EN 60068-2-27)	1000 m/s² (6 ms)
Design:	According DIN VDE 0160

General Data	
Weight	approx. 240 g
Connections	cable or connector outlet
Protection rating (EN 60529)	Housing: IP65, IP67; shaft sealed: IP65; (IP40 for K1)
Operating temperature	Connector: -40 °C up to +85 °C, cable: -20 °C up to +80 °C
Storage temperature	Connector: -40 °C up to +100 °C, cable: -30 °C up to +80 °C

More Information
General technical data and safety instructions **http://www.wachendorff-automation.com/gtd**
Options **http://www.wachendorff-automation.com/acc**

Cable connection L2 axial with 2 m cable

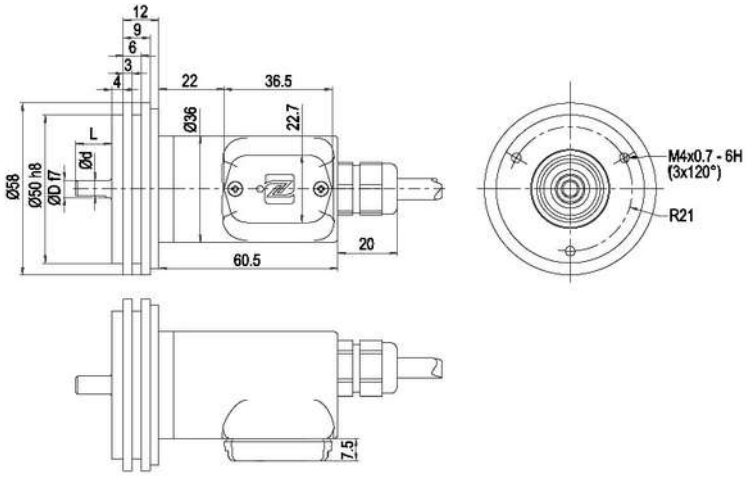

D = 6 L = 12 d = 5.3 Welle abgeflacht / shaft with flat
D = 10 L = 20 d = 10 Wellen nicht abgeflacht / shaft without flat

Option AIX:
D = 6 L = 10 d = 5.3 Welle abgeflacht / shaft with flat

Option AAS:
D = 10 L = 20 d = 9 Welle abgeflach / shaft with flat

Description		ABN inv. poss.
L2	axial, shield connected to encoder housing	•

Assignments		
	L2	**L2**
Circuit	BAS	ADV
GND	WH	WH
(+) Vcc	BN	BN
A	GN	GN
B	YE	YE
N	GY	GY
CH4	-	GYPK
SET	-	PK
A inv.	RD	RD
B inv.	BK	BK
N inv.	VT	VT
CH4 inv.	-	RDBU
Shield	flex	flex

Cable connection L3 radial with 2 m cabel

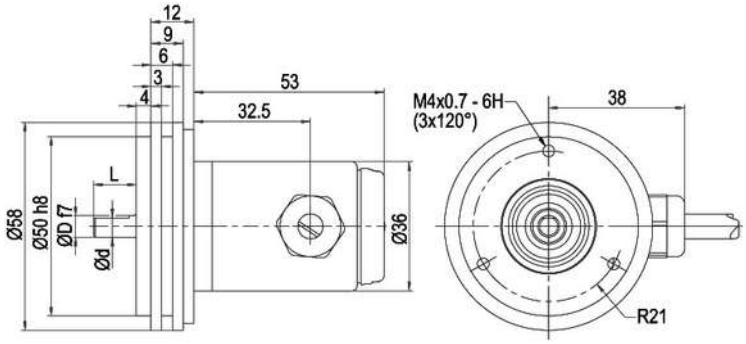

D = 6 L = 12 d = 5.3 Welle abgeflacht / shaft with flat
D = 10 L = 20 d = 10 Wellen nicht abgeflacht / shaft without flat

Option AIX:
D = 6 L = 10 d = 5.3 Welle abgeflacht / shaft with flat

Option AAS:
D = 10 L = 20 d = 9 Welle abgeflach / shaft with flat

Description		ABN inv. poss.
L3	radial, shield connected to encoder housing	•

Assignments		
	L3	**L3**
Circuit	BAS	ADV
GND	WH	WH
(+) Vcc	BN	BN
A	GN	GN
B	YE	YE
N	GY	GY
CH4	-	GYPK
SET	-	PK
A inv.	RD	RD
B inv.	BK	BK
N inv.	VT	VT
CH4 inv.	-	RDBU
Shield	flex	flex

Cable K1 (IP40) radial with 2 m cable

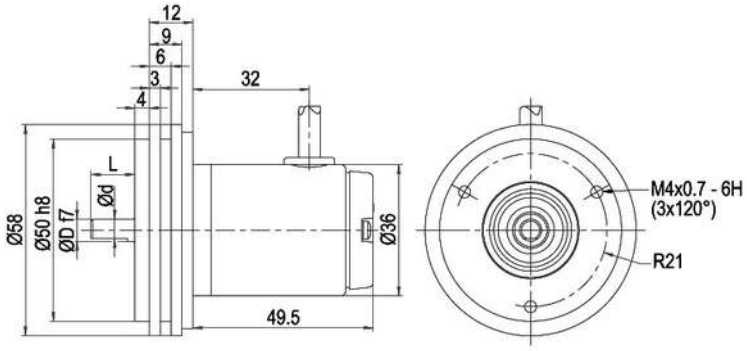

D = 6 L = 12 d = 5.3 Welle abgeflacht / shaft with flat
D = 10 L = 20 d = 10 Wellen nicht abgeflacht / shaft without flat

Option AIX:
D = 6 L = 10 d = 5.3 Welle abgeflacht / shaft with flat

Option AAS:
D = 10 L = 20 d = 9 Welle abgeflach / shaft with flat

Description		ABN inv. poss.
K1	radial, shield not connected (IP40)	•

Assignments		
	K1	**K1**
Circuit	BAS	ADV
GND	WH	WH
(+) Vcc	BN	BN
A	GN	GN
B	YE	YE
N	GY	GY
CH4	-	GYPK
SET	-	PK
A inv.	RD	RD
B inv.	BK	BK
N inv.	VT	VT
CH4 inv.	-	RDBU
Shield	flex	flex

Sensor connector (M12x1) SB axial, 8-, 12-pin

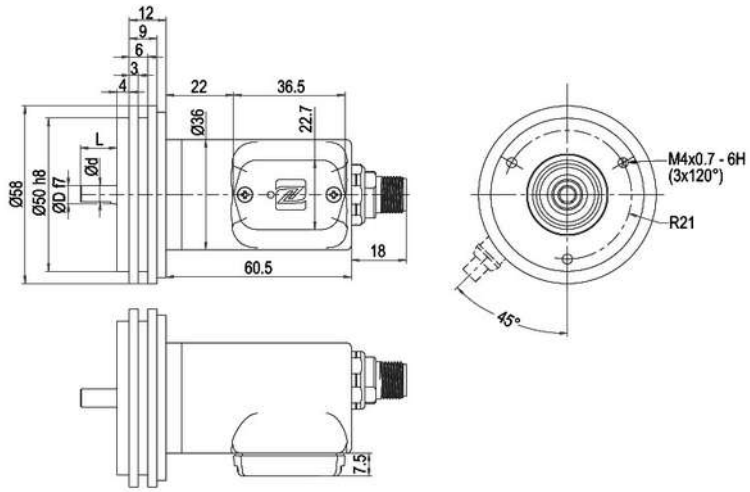

D = 6 L = 12 d = 5.3 Welle abgeflacht / shaft with flat
D = 10 L = 20 d = 10 Wellen nicht abgeflacht / shaft without flat

Option AIX:
D = 6 L = 10 d = 5.3 Welle abgeflacht / shaft with flat

Option AAS:
D = 10 L = 20 d = 9 Welle abgeflach / shaft with flat

Description		ABN inv. poss.
SB8	axial, 8-pin, Connector connected to encoder housing	•
SB12	axial, 12-pin, Connector connected to encoder housing	•

Assignments		
	SB8	**SB12**
	8-pin	**12-pin**
		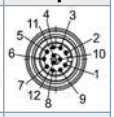
Circuit	BAS	ADV
GND	1	3
(+) Vcc	2	1
A	3	4
B	4	6
N	5	8
CH4	-	11
SET	-	5
A inv.	6	9
B inv.	7	7
N inv.	8	10
CH4 inv.	-	12
n. c.	-	2
Shield	-	-

Sensor-connector (M12x1) SC radial, 8-, 12-pin

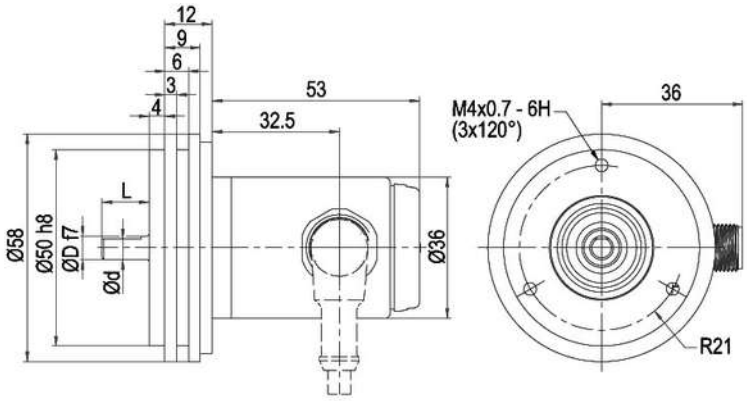

D = 6 L = 12 d = 5.3 Welle abgeflacht / shaft with flat
D = 10 L = 20 d = 10 Wellen nicht abgeflacht / shaft without flat

Option AIX:
D = 6 L = 10 d = 5.3 Welle abgeflacht / shaft with flat

Option AAS:
D = 10 L = 20 d = 9 Welle abgeflach / shaft with flat

Description		ABN inv. poss.
SC8	radial, 8-pin, Connector connected to encoder housing	•
SC12	radial, 12-pin, Connector connected to encoder housing	•

Assignments		
	SC8	**SC12**
	8-pin	**12-pin**
		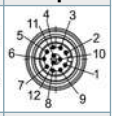
Circuit	BAS	ADV
GND	1	3
(+) Vcc	2	1
A	3	4
B	4	6
N	5	8
CH4	-	11
SET	-	5
A inv.	6	9
B inv.	7	7
N inv.	8	10
CH4 inv.	-	12
n. c.	-	2
Shield	-	-

Options

Shafts sealed to IP67, only with 10 mm shaft with flat	Order key
The encoder WDGN 58A can be supplied in a IP67 version. (full IP67 only connection CB, CC, L2 or L3 version; cable connection L1 IP40 only shaft sealed IP67). Max. RPM: 3500 min'-1 Permitted Shaft-Loading: axial 100 N; radial 110 N Starting-torque: approx. 4 Ncm at ambient temperature	**AAS**

Shaft length 10 mm (Ø 6 mm)	Order key
The encoder WDGN 58A shaft: Ø 6 mm is also available with a shortened shaft L = 10 mm.	**AIX**

Cable length	Order key
The encoder WDGN 58A can be supplied with more than 2 m cable. The maximum cable length depends on the supply voltage and the frequency; see Downloads: „General technical Data“. Please extend the standard order code with a three figure number, specifying the cable length in decimetres. Example: 5 m cable = 050	**XXX = Decimeter**

Example Order No.	Type					Your encoder
WDGN 58A	WDGN 58A					WDGN 58A
	Shaft					
06	06; 10					
	Pulses per revolution PPR:					
X	configurable 1-16384 Other PPRs on request					
	Channels:					
X	ABN, ABN+CH4					
	Output circuit					
BAS	**Resolution PPR**	**Power supply VDC**	**Output circuit**	**Light reserve warning**	**Order key**	
	configurable 1-16384	4.75 - 32	configurable HTL, TTL (A,B,N + inv.)	-	BAS	
		4.75 - 32	configurable HTL, TTL (A,B,N,CH4 + inv.)	-	ADV	
	Electrical connections					
L2	**Description**			**ABN inv. poss.**	**Order key**	
	Cable: length (2 m standard, WDG 58T: 1 m)					
	radial, shield not connected (IP40)			•	K1	
	axial, shield connected to encoder housing			•	L2	
	radial, shield connected to encoder housing			•	L3	
	Connector: (shield connected to encoder housing)					
	sensor-connector, M12x1, 8-pin, axial			•	SB8	
	sensor-connector, M12x1, 8-pin, radial			•	SC8	
	sensor-connector, M12x1, 12-pin, axial			•	SB12	
	sensor-connector, M12x1, 12-pin, radial			•	SC12	
	Options					
	Description			**Order key**		
	Shafts sealed to IP67, only with 10 mm shaft with flat			AAS		
	Shaft length 10 mm (Ø 6 mm)			AIX		
	Without option			Empty		
	Cable length			XXX = Decimeter		

Example Order No.=	WDGN 58A	06	X	X	BAS	L2		WDGN 58A							Your encoder



For further information please contact our local distributor.
Here you find a list of our distributors worldwide.
https://www.wachendorff-automation.com/

WACHENDORFF

Wachendorff Automation GmbH & Co. KG
Industriestrasse 7 • 65366 Geisenheim
Germany

Phone: +49 67 22 / 99 65 25
Fax: +49 67 22 / 99 65 70
E-Mail: wdg@wachendorff.de
www.wachendorff-automation.de