# Ultrasonic Sensor
# Diffuse Mode Sensor
# RU40U-M18E-LI8X2- H1151

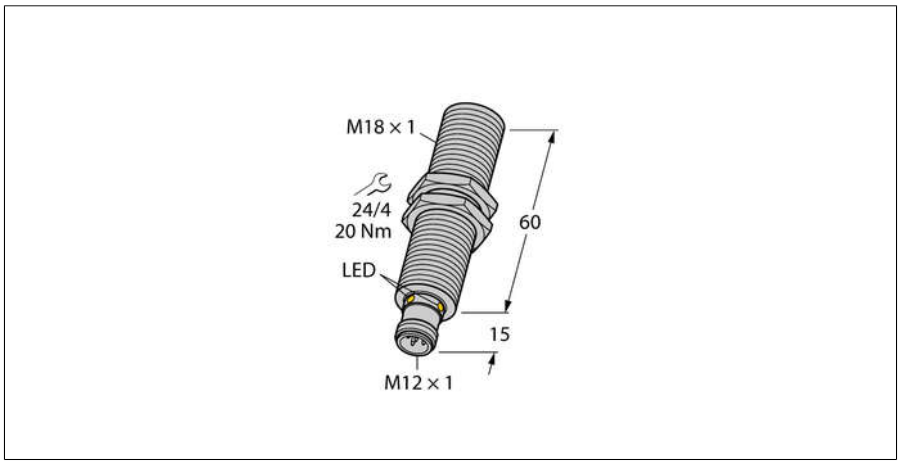


- **Smooth sonic transducer face**
- **Cylindrical housing M18, potted**
- **Connection via M12 x 1 male**
- **Teach range adjustable via adapter**
- **Temperature compensation**
- **Blind zone: 2.5 cm**
- **Range: 40 cm**
- **Resolution: 0.5 mm**
- **Sonic cone angle: 9°**
- **Analog output, 4..20 mA, additional switching output PNP**

| | |
|---|---|
| **Type designation** | RU40U-M18E-LI8X2- H1151 |
| Ident no. | 1610069 |
| **Operating mode** | Ultrasonic diffuse mode sensor |
| Range | 2.5…40cm |
| Resolution | 0.5 mm |
| Ultrasound frequency | 300 kHz |
| Repeat accuracy | 0.15 % of full scale |
| Temperature drift | 1.5% of full scale |
| Linearity error | ≤ ± 0.5 % |
| Edge lengths of the nominal actuator | 20 mm |
| Approach speed | ≤ 4 m/s |
| Pass speed | ≤ 1.5 m/s |
| **Operating voltage** | 15…30 VDC |
| Residual ripple | 10 % $U_{ss}$ |
| DC rated operational current | ≤ 150 mA |
| No-load current $I_0$ | ≤ 50 mA |
| Load resistance | ≤ 1000 Ω |
| Residual current | ≤ 0.1 mA |
| Response time typical | 108 ms |
| Readiness delay | 300 ms |
| Output function | Analog, Analog output |
| Output 1 | Analog output |
| Current output | 4…20 mA |
| Switching frequency | 5.2 Hz |
| Voltage drop at $I_e$ | ≤ 2.5 V |
| Short-circuit protection | yes/ Cyclic |
| Reverse polarity protection | yes |
| Wire breakage protection | yes |
| **Design** | Threaded barrel,M18 |
| Radiation direction | straight |
| Dimensions | 75 x Ø18 mm |
| Housing material | Metal, CuZn, Nickel-plated |
| Max. tightening torque of connector B | 20 Nm |
| Transducer material | Plastic, Epoxyd resin and PU foam |
| Electrical connection | Connectors, M12 × 1, 5-wire |
| Protection class | IP67 |
| Ambient temperature | -25…+70 °C |
| Storage temperature | -40…+80 °C |
| Declaration of conformity EN ISO/IEC | EN 60947-5-7 |
| Vibration resistance | IEC 60068-2 |
| MTTF | 202 years |
| MTTF note | acc. to SN 29500 (Ed. 99) 40 °C |
| **Switching state** | LED,Yellow |
| Object detected | LEDGreen |

### Wiring Diagram

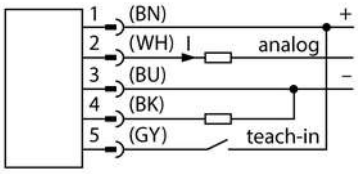


### Functional principle

Ultrasonic sensors capture a multitude of objects contactlessly and wear-free with ultrasonic waves. It does not matter whether the object is transparent or opaque, metallic or non-metallic, firm, liquid or powdery. Even environmental conditions such as spray, dust or rain hardly affect their function.

The sonic cone diagram indicates the detection range of the sensor. In accordance with standard EN 60947-5-7, quadratic targets in a range of sizes (20 x 20 mm, 100 x 100 mm) and a round rod with a diameter of 27 mm are used.

Important: The detection ranges for other targets may differ from those for standard targets due to the different reflection properties and geometries.

### Sonic Cone

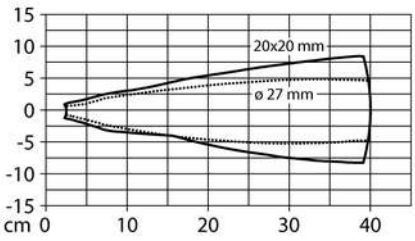


Edition • 2018-05-20T15:04:11+02:00

# Ultrasonic Sensor
# Diffuse Mode Sensor
# RU40U-M18E-LI8X2- H1151

**Mounting instructions/Description**

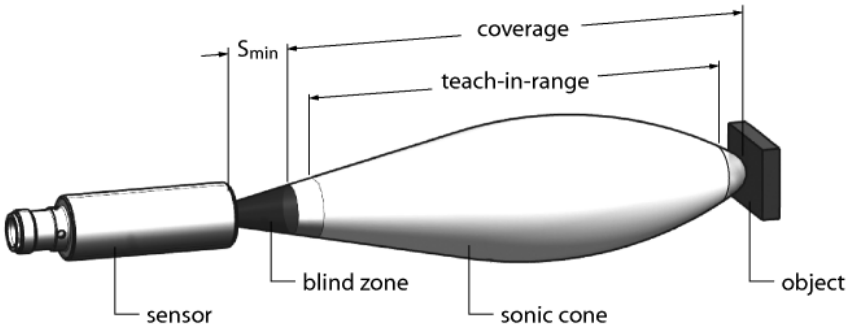


**Setting the limit values**

The ultrasonic sensor has an analog output with teach-able measuring range. Teaching is implemented via the teach adapter. The green and yellow LEDs indicate whether the sensor has detected the object.

**Teach**

Connect the TX1-Q20L60 teach adapter between the sensor and connection cable

- Position object for remote limit value
- Press the button against Ub for 2 - 7 seconds
- Position object for close limit value
- Press the button against Ub for 8 - 11 seconds

Optional: Inversion of analog output

- Press the button for 12 - 17 seconds

**LED response**

Successful teaching is displayed with a fast flashing LED. Thereafter, the sensor automatically runs in normal operating mode. Unsuccessful teaching is indicated by the LED flashing alternately green and yellow.
In normal operation, the two LEDs indicate the status of the sensor.

- Green: Object within the detection range, but not in the measuring range
- Yellow: Object is within the measuring range
- Off: Object outside the detection range or signal loss

Edition • 2018-05-20T15:04:11+02:00

## Accessories

| Type code | Ident no. | Description | |
|---|---|---|---|
| MW-18 | 6945004 | Mounting bracket for threaded barrel devices; material: Stainless steel A2 1.4301 (AISI 304) | 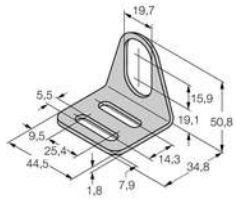 |

## Wiring accessories

| Type code | Ident no. | Description | |
|---|---|---|---|
| RKC4.5T-2/TEL | 6625016 | Connection cable, female M12, straight, 5-pin, cable length: 2 m, sheath material: PVC, black; cULus approval; other cable lengths and qualities available, see www.turck.com |  |
| WKC4.5T-2/TEL | 6625028 | Connection cable, female M12, angled, 5-pin, cable length: 2 m, sheath material: PVC, black; cULus approval; other cable lengths and qualities available, see www.turck.com |  |

## Function accessories

| Type code | Ident no. | Description | |
|---|---|---|---|
| TX1-Q20L60 | 6967114 | Teach adapter for inductive encoders, linear position, angle, ultrasonic and capacitive sensors | 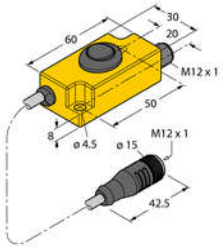 |

Edition • 2018-05-20T15:04:11+02:00