Technical data sheet
Diffuse sensor with background suppression
Part no.: 50148005
HT5B/4X-M8



For Illustration purposes only

Contents

- Technical data
- Dimensioned drawings
- Electrical connection
- Diagrams
- Operation and display
- Part number code
- Notes
- Further information
- Accessories

Technical data

Basic data

Series	5B
Operating principle	Diffuse reflection principle with background suppression

Optical data

Black-white error	< 15% up to 200 mm
Operating range	Guaranteed operating range
Operating range, white 90%	0.002 ... 0.4 m
Operating range, gray 18%	0.005 ... 0.3 m
Operating range, black 6%	0.01 ... 0.2 m
Operating range limit	0.002 ... 0.4 m (typical operating range)
Adjustment range	20 ... 400 mm
Beam path	Focused
Light source	LED, Red
Wavelength	645 nm
Transmitted-signal shape	Pulsed
LED group	Exempt group (in acc. with EN 62471)
Type of light spot geometry	Round
Focus	Fixed
Focal distance	200 mm

Electrical data

Protective circuit	Polarity reversal protection
	Short circuit protected

Performance data

Supply voltage U_B	10 ... 30 V, DC, Incl. residual ripple
Residual ripple	0 ... 15 %, From U_B
Open-circuit current	0 ... 15 mA

Outputs

Number of digital switching outputs	1 Piece(s)

Switching outputs

Type	Digital switching output
Voltage type	DC
Switching current, max.	50 mA
Switching voltage	high: ≥(U_B-2.5V)
	low: ≤ 2.5 V

Switching output 1

Switching element	Transistor, PNP
Switching principle	Light switching (dark switching by reversing polarity of U_B)

Time behavior

Switching frequency	1,000 Hz
Response time	0.5 ms
Readiness delay	300 ms

Connection

Number of connections	1 Piece(s)

Connection 1

Function	Signal OUT
	Voltage supply
Type of connection	Connector
Thread size	M8
Type	Male
Material	Plastic
No. of pins	4 -pin

Mechanical data

Dimension (W x H x L)	11 mm x 32.4 mm x 20 mm
Housing material	Plastic
Plastic housing	PC-ABS
Lens cover material	Plastic / PMMA
Net weight	20 g
Housing color	Black
	Red
Type of fastening	Two M3 threaded sleeves
	Via optional mounting device
Recommended tightening torque for M3 fastening	0.9 N·m
Compatibility of materials	ECOLAB

Operation and display

Type of display	LED
Number of LEDs	2 Piece(s)
Operational controls	Multiturn potentiometer
Function of the operational control	Range adjustment

Environmental data

Ambient temperature, operation	-40 ... 60 °C
Ambient temperature, storage	-40 ... 70 °C

Certifications

Degree of protection	IP 67
Protection class	III
Approvals	c UL US
Standards applied	IEC 60947-5-2

Classification

Customs tariff number	85365019
ECLASS 5.1.4	27270904
ECLASS 8.0	27270904
ECLASS 9.0	27270904
ECLASS 10.0	27270904
ECLASS 11.0	27270904
ECLASS 12.0	27270903
ECLASS 13.0	27270903
ECLASS 14.0	27270903
ECLASS 15.0	27270903
ETIM 5.0	EC002719
ETIM 6.0	EC002719
ETIM 7.0	EC002719
ETIM 8.0	EC002719
ETIM 9.0	EC002719
ETIM 10.0	EC002719

Dimensioned drawings

All dimensions in millimeters

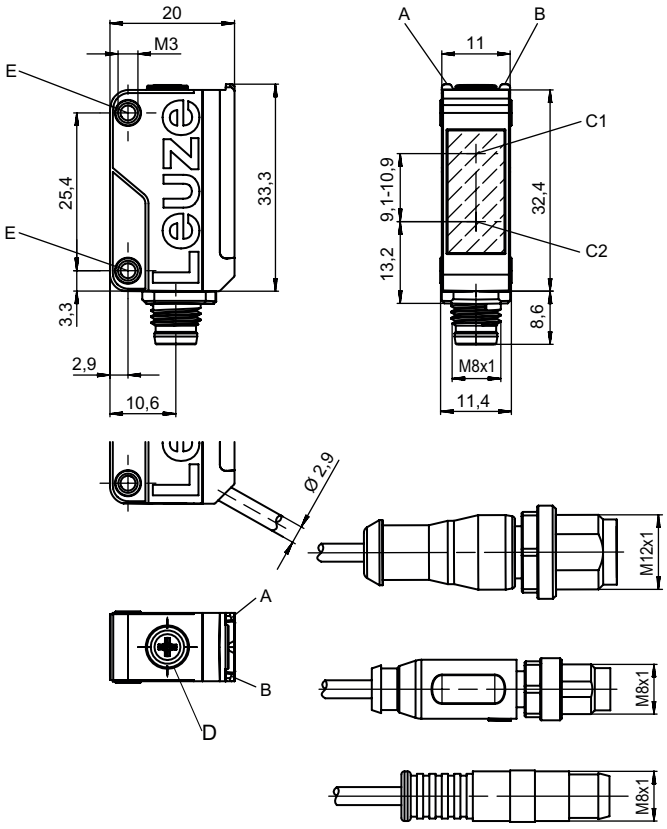

A Green LED
B Yellow LED
C1 Receiver
C2 Transmitter
D Range adjustment
E Threaded sleeve

Electrical connection

Connection 1

Function	Signal OUT
	Voltage supply
Type of connection	Connector
Thread size	M8
Type	Male
Material	Plastic
No. of pins	4 -pin

Pin	Pin assignment
1	V+
2	n.c.
3	GND
4	OUT 1

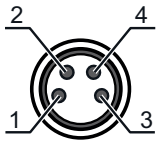

Diagrams

Typ. response behavior at 90% diffuse reflection (focusing distance 200 mm)

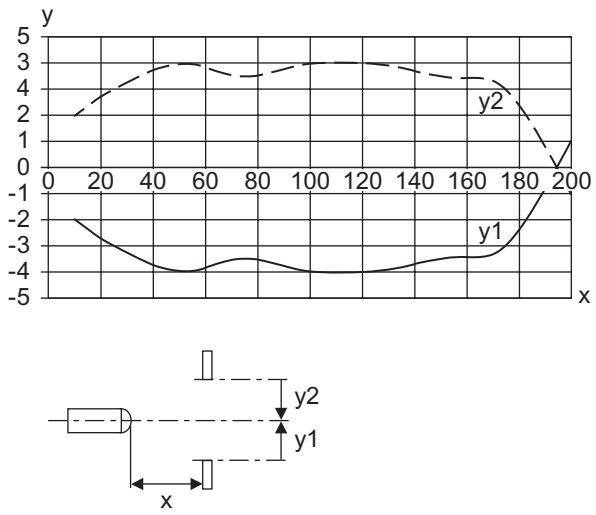

x Range [mm]
y Misalignment [mm]

Typ. response behavior at 90% diffuse reflection (focusing distance 400 mm)

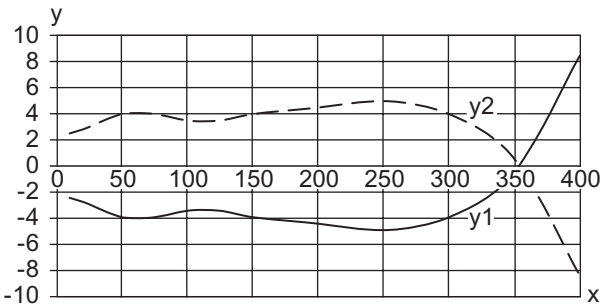

x Range [mm]
y Misalignment [mm]

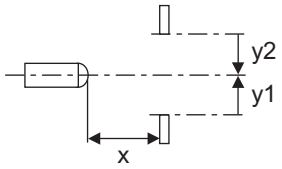

Diagrams

Typ. black/white behavior

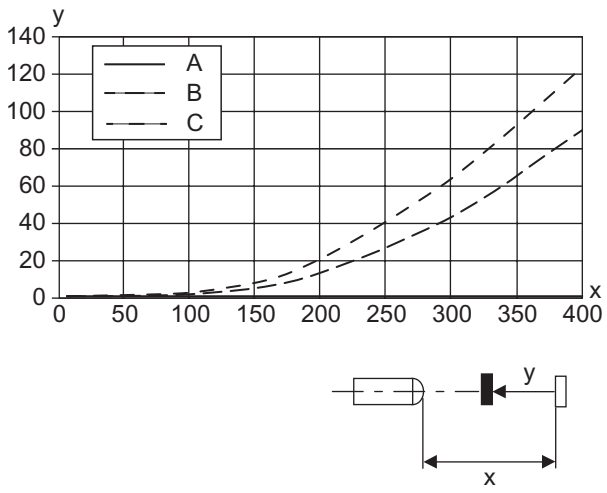

x Range [mm]
y Reduction of range [mm]

A White 90%
B Gray 18%
C Black 6%

Operation and display

LED	Display	Meaning
1	Yellow, continuous light	Object detected
2	Green, continuous light	Operational readiness

Part number code

Part designation: **AAA5B D-E.FF/GG.HH-JJ**

AAA5B	**Operating principle / construction** LS5B: Throughbeam photoelectric sensor transmitter LE5B: Throughbeam photoelectric sensor receiver PRK5B: Retro-reflective photoelectric sensor with polarization filter HT5B: Diffuse reflection sensor with background suppression ET5B: Energetic diffuse reflection sensor
D	**Light type** n/a: red light I: infrared light PP: Power PinPoint® LED
E	**Preset range (optional)** n/a: operating range acc. to data sheet xxxF: Preset range [mm]
FF	**Equipment** 1: 270° potentiometer D: Detection of stretch-wrapped objects M: Detection of semi-transparent media and transparent films XL: Extra long light spot n/a with retro-reflective photoelectric sensors (PRK): operating range not adjustable n/a with ET / HT: range adjustable via 8-turn potentiometer
GG	**Switching output / Function** 2: NPN transistor output, light switching N: NPN transistor output, dark switching 4: PNP transistor output, light switching P: PNP transistor output, dark switching 9: deactivation input (deactivation with high signal) X: pin not used

Part number code

HH	**Electrical connection** n/a: cable, standard length 2000 mm, 3-wire M8: M8 connector, 4-pin (plug) 200-M12: cable, length 200 mm with M12 connector, 4-pin, axial (plug) 200-M8: cable, length 200 mm with M8 connector, 4-pin, axial (plug) 200-M8.3: cable, length 200 mm with M8 connector, 3-pin, axial (plug) 200-M8.1: Cable, length 200 mm with snap-in M8 connector, 4-pin (plug) M8.3: M8 connector, 3-pin (plug)
JJ	**Version** Y1: mounting holes without threaded sleeve

Note

- A list with all available device types can be found on the Leuze website at www.leuze.com.

Notes

Observe intended use!

- This product is not a safety sensor and is not intended as personnel protection.
- The product may only be put into operation by competent persons.
- Only use the product in accordance with its intended use.

For UL applications:

- Only for use in "class 2" circuits
- These proximity switches shall be used with UL Listed Cable assemblies rated 30V, 0.5A min, in the field installation, or equivalent (categories: CYJV/CYJV7 or PVVA/PVVA7)

Further information

- Typ. operating range limit/adjustment range: max. achievable operating range/adjustment range for light objects (white 90%)
- Operating range: recommended operating range for objects with different diffuse reflection
- Light source: Average life expectancy 100,000 h at an ambient temperature of 25 °C
- Response time: For short decay times, an ohmic load of approx. 5 kOhm is recommended

Accessories

Connection technology - Connection cables

	Part no.	Designation	Article	Description
	50130850	KD U-M8-4A-V1-050	Connection cable	Application: Chemical resistant Connection 1: Connector, M8, Axial, Female, 4 -pin Connector, LED: No Connection 2: Open end Shielded: No Cable length: 5,000 mm Sheathing material: PVC
	50130871	KD U-M8-4W-V1-050	Connection cable	Application: Chemical resistant Connection 1: Connector, M8, Angled, Female, 4 -pin Connector, LED: No Connection 2: Open end Shielded: No Cable length: 5,000 mm Sheathing material: PVC

Mounting technology - Mounting brackets

	Part no.	Designation	Article	Description
	50118542	BT 200M.5	Mounting bracket	Design of mounting device: Angle, L-shape Fastening, at system: Through-hole mounting Mounting bracket, at device: Screw type, Suited for M3 screws Type of mounting device: Adjustable Material: Stainless steel
	50124651	BT 205M-10SET	Mounting device set	Contains: 10x Design of mounting device: Angle, L-shape Fastening, at system: Through-hole mounting Mounting bracket, at device: Screw type Type of mounting device: Rigid Material: Metal

Mounting technology - Rod mounts

	Part no.	Designation	Article	Description
	50117829	BTP 200M-D12	Mounting system	Design of mounting device: Protection hood Fastening, at system: For 12 mm rod Mounting bracket, at device: Screw type Type of mounting device: Clampable, Adjustable, Turning, 360° Material: Metal
	50117255	BTU 200M-D12	Mounting system	Contains: 2x M3 x 16 screw, 2 M3 x 20 screws, 2x position washers Design of mounting device: Mounting system Fastening, at system: For 12 mm rod, Sheet-metal mounting Mounting bracket, at device: Screw type, Suited for M3 screws Type of mounting device: Clampable, Adjustable, Turning, 360° Material: Metal

Accessories

	Note
	A list with all available accessories can be found on the Leuze website in the Download tab of the article detailed page.