IM5139

Inductive analogue sensor with IO-Link

IMC4015A1PKG/IO/US

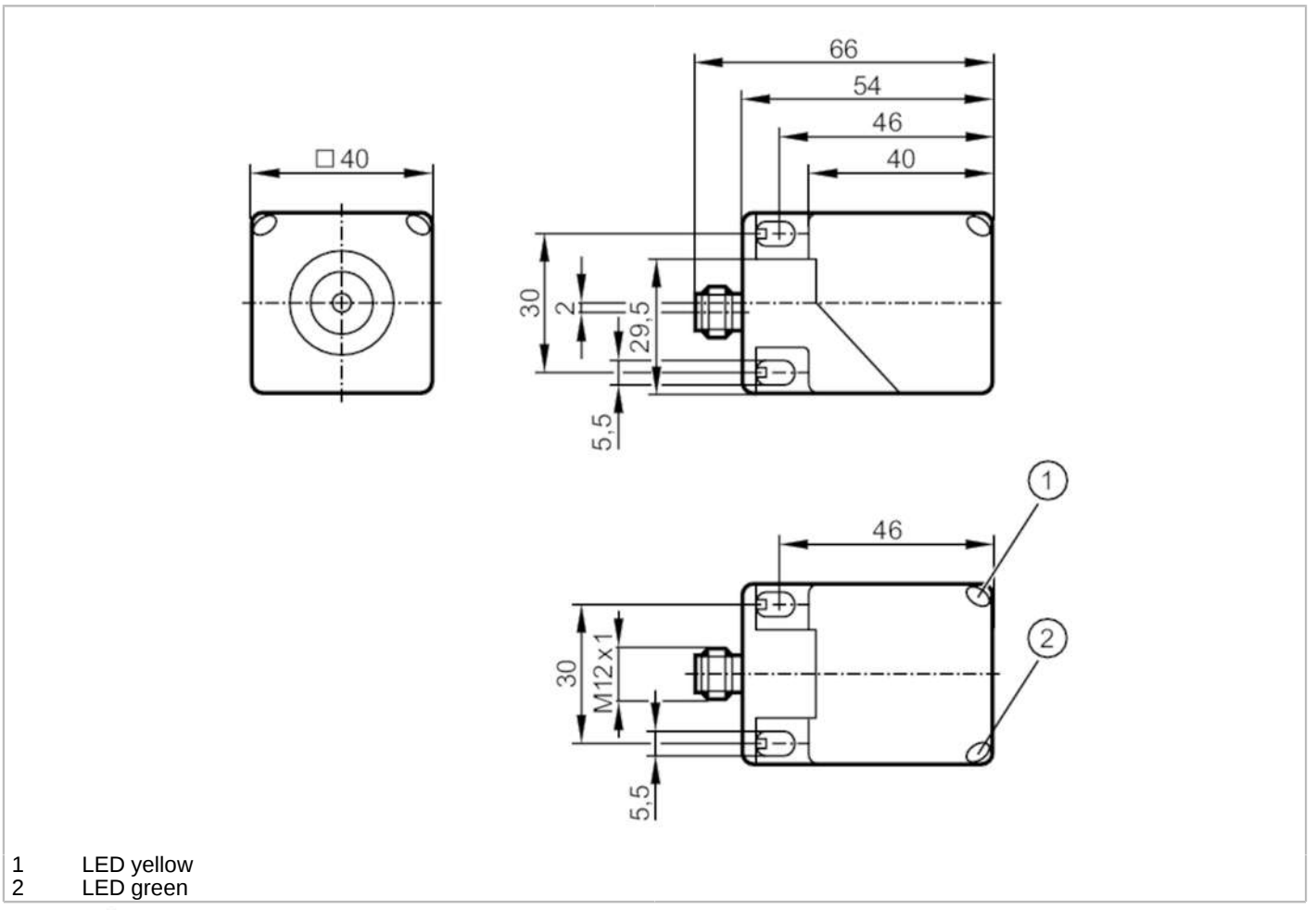

1 LED yellow
2 LED green

Product characteristics		
Electrical design		PNP/NPN; (parameterisable)
Output function		normally open / normally closed; (parameterisable)
Communication interface		IO-Link
Housing		rectangular
Dimensions	[mm]	40 x 40 x 54
Electrical data		
Operating voltage	[V]	15...30 DC
Current consumption	[mA]	< 33
Protection class		II
Reverse polarity protection		yes
Outputs		
Electrical design		PNP/NPN; (parameterisable)
Output function		normally open / normally closed; (parameterisable)
Max. voltage drop switching output DC	[V]	2.5
Permanent current rating of switching output DC	[mA]	100
Switching frequency DC	[Hz]	100

IM5139

Inductive analogue sensor with IO-Link

IMC4015A1PKG/IO/US

Analogue current output	[mA]	4...20; (linear; gradient: 1,143 mA/mm; for frontal approach and for target made of mild steel: 45 x 45 x 1 mm)	
Max. load	[Ω]	500; (Ub <=18 V;; Max. load <=400 Ω)	
Short-circuit protection		yes	
Overload protection		yes	
Detection zone			
Measuring range	[mm]	1...15	
Switch point IO-Link	[mm]	2.37...13.99	
Accuracy / deviations			
Correction factor		steel: 1 / stainless steel: 0.9 / brass: 0.4 / aluminium: 0.4 / copper: 0.3	
Hysteresis	[% of Sr]	3...15	
Note on hysteresis		parameterisable	
Linearity error of analogue output	[%]	± 2; (of the final value of the measuring range)	
Repeatability analogue output	[%]	± 2; (of the final value of the measuring range)	
Temperature coefficient	[%/K vom MEW]	±0,15	
Temperature drift		± 5 %; (of the final value of the measuring range)	
Response times			
Response time	[ms]	< 20	
Interfaces			
Communication interface		IO-Link	
Transmission type		COM2 (38,4 kBaud)	
IO-Link revision		1.1	
SDCI standard		IEC 61131-9	
Profiles		Smart Sensor: Identification and diagnosis; Multi-channel, two setpoint switching sensor, type 0 Generic Profiled Sensor; Teach Channel	
SIO mode		yes	
Required master port type		A	
Min. process cycle time	[ms]	3.2	
IO-Link process data (cyclical)		function	bit length
		process value	16
		device status	4
		binary switching information	2
IO-Link functions (acyclical)		switching cycles counter; switch-on cycle counter; operating hours counter; internal temperature; application specific tag	
Supported DeviceIDs		Type of operation	DeviceID
		Default	1205
Note		For further information please see the IODD PDF file under "Downloads"	
Operating conditions			
Ambient temperature	[°C]	-25...80	
Protection		IP 67	

IM5139

Inductive analogue sensor with IO-Link

IMC4015A1PKG/IO/US

Tests / approvals			
EMC		EN 61000-4-2 ESD	4 kV CD / 8 kV AD
		EN 61000-4-3 HF radiated	10 V/m
		EN 61000-4-4 Burst	2 kV
		EN 61000-4-6 HF conducted	10 V
		EN 55011	class B
MTTF	[years]	231	
Embedded software included		yes	
UL approval		Ta	-25...70 °C
		Enclosure type	Type 1
		power supply	Limited Voltage/Current
		UL Approval no.	A025
		File number UL	E174191
Mechanical data			
Weight	[g]	190	
Housing		rectangular	
Sensing face		5 positions selectable	
Mounting		flush mountable	
Dimensions	[mm]	40 x 40 x 54	
Materials		PA; brass white bronze coated	
Displays / operating elements			
Display		target in measuring range	1 x LED, yellow lights
		target outside measuring range	1 x LED, yellow flashing
		operation	LED, green
Remarks			
Pack quantity		1 pcs.	

Electrical connection - plug

Connector: 1 x M12; coding: A



IM5139

Inductive analogue sensor with IO-Link

IMC4015A1PKG/IO/US

Connection

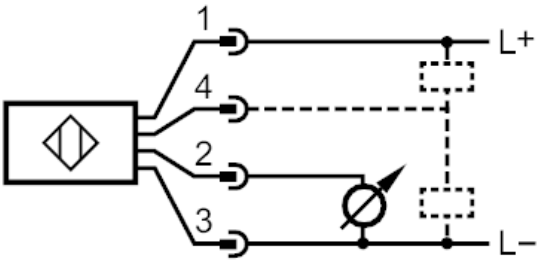

1	L +
2	OUT
3	L -
4	OUT / IO-Link