609-2RSH

SKF Explorer

Dimensions

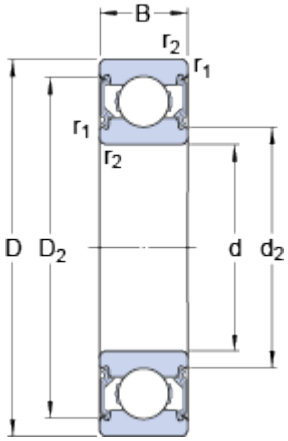

d		9	mm
D		24	mm
B		7	mm
d_2	≈	12.85	mm
D_2	≈	21.2	mm
$r_{1,2}$	min.	0.3	mm

Abutment dimensions

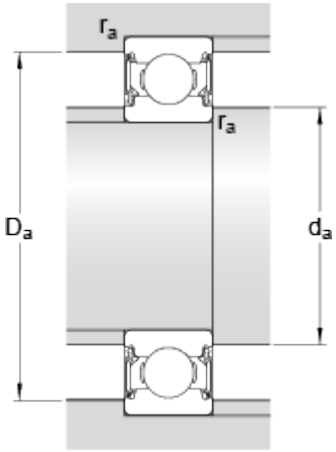

d_a	min.	11	mm
d_a	max.	12.5	mm
D_a	max.	22	mm
r_a	max.	0.3	mm

Calculation data

Basic dynamic load rating	C	3.9	kN
Basic static load rating	C_0	1.7	kN
Fatigue load limit	P_u	0.071	kN
Limiting speed		19000	r/min
Calculation factor	k_r	0.025	
Calculation factor	f_0	13	

Mass

Mass bearing	0.0146	kg