I27001

Inductive area sensor

SIY-3120-BPKG

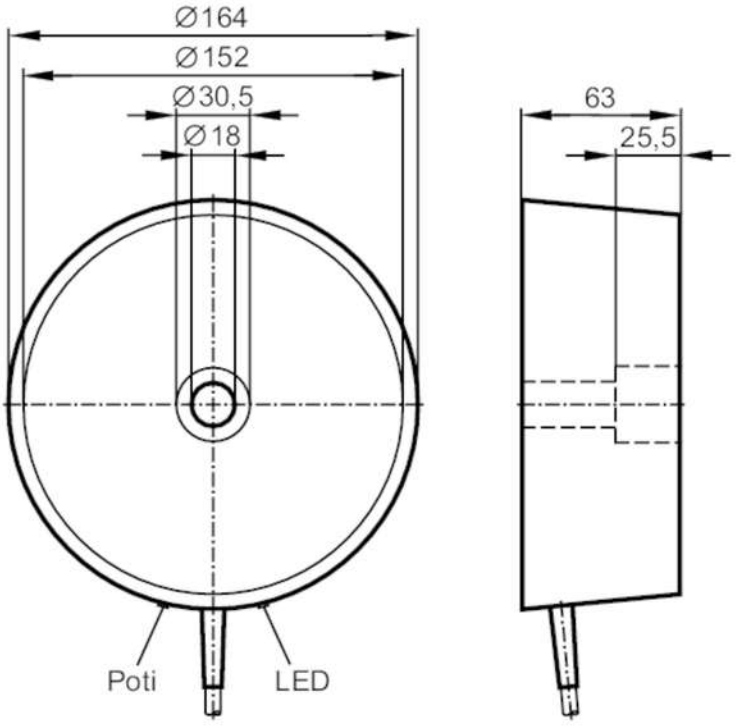

Product characteristics		
Electrical design		PNP
Output function		normally open
Sensing range	[mm]	30...120
Housing		cylindrical
Dimensions	[mm]	Ø 164 / L = 63
Electrical data		
Operating voltage	[V]	10...36 DC
Current consumption	[mA]	15; (24 V)
Protection class		II
Reverse polarity protection		yes
Outputs		
Electrical design		PNP
Output function		normally open
Max. voltage drop switching output DC	[V]	2.5
Permanent current rating of switching output DC	[mA]	250
Switching frequency DC	[Hz]	3
Short-circuit protection		yes
Type of short-circuit protection		pulsed

I27001

Inductive area sensor

SIY-3120-BPKG

Overload protection		yes	
Detection zone			
Sensing range	[mm]	30...120	
Sensing range adjustable		yes	
Factory setting sensing range	[mm]	120	
Real sensing range Sr	[mm]	120 ± 10 %	
Accuracy / deviations			
Correction factor		steel: 1 / stainless steel: 0.7 / brass: 0.4 / aluminium: 0.3 / copper: 0.2	
Hysteresis	[% of Sr]	< 15	
Switch point drift	[% of Sr]	-15...15	
Operating conditions			
Ambient temperature	[°C]	-20...70	
Protection		IP 65	
Tests / approvals			
EMC		EN 60947-5-2	
MTTF	[years]	1049	
Mechanical data			
Weight	[g]	1242.5	
Housing		cylindrical	
Mounting		non-flush mountable	
Dimensions	[mm]	Ø 164 / L = 63	
Materials		housing: PBT; bottom cover: aluminium	
Displays / operating elements			
Display		switching status	1 x LED, yellow
Accessories			
Items supplied		screws: 1 x M16 x 90	
Remarks			
Pack quantity		1 pcs.	

I27001

Inductive area sensor

SIY-3120-BPKG

Electrical connection

Cable: 2 m, PVC; 3 x 0.5 mm²

Connection

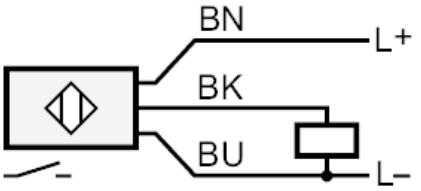

	Core colours :
BK =	black
BN =	brown
BU =	blue