AC axial compact fan

ebm-papst Mulfingen GmbH & Co. KG
Bachmühle 2 · D-74673 Mulfingen
Phone +49 7938 81-0
Fax +49 7938 81-110
info1@de.ebmpapst.com
www.ebmpapst.com

Limited partnership · Headquarters Mulfingen
Amtsgericht (court of registration) Stuttgart · HRA 590344

General partner Elektrobau Mulfingen GmbH · Headquarters Mulfingen
Amtsgericht (court of registration) Stuttgart · HRB 590142

Nominal data

Type	**W2E142-BB01-01**
Motor	**M2E052-BA**

Phase		1~	1~
Nominal voltage	VAC	230	230
Frequency	Hz	50	60
Method of obtaining data		fa	fa
Valid for approval/standard		CE	CE
Speed (rpm)	min^{-1}	2800	3350
Power consumption	W	27	28
Current draw	A	0.12	0.13
Capacitor	µF	1	1
Capacitor voltage	VDB	400	400
Capacitor standard		S0 (CE)	S0 (CE)
Min. ambient temperature	°C	-25	-25
Max. ambient temperature	°C	55	65

ml = Max. load · me = Max. efficiency · fa = Free air · cs = Customer specification · ce = Customer equipment
Subject to change

AC axial compact fan

Technical description

Weight	0.8 kg
Size	142 mm
Motor size	52
Rotor surface	Painted black
Impeller material	Sheet steel, painted black
Fan housing material	Die-cast aluminum, painted black
Number of blades	7
Airflow direction	V
Direction of rotation	Counterclockwise, viewed toward rotor
Degree of protection	IP22; installation- and position-dependent
Insulation class	"B"
Moisture (F) / Environmental (H) protection class	H0+
Max. permitted ambient temp. for motor (transport/storage)	+ 80 °C
Min. permitted ambient temp. for motor (transport/storage)	- 40 °C
Installation position	Any
Condensation drainage holes	None
Mode	S1
Motor bearing	Ball bearing
Touch current according to IEC 60990 (measuring circuit Fig. 4, TN system)	< 0.75 mA
Electrical hookup	Plug
Motor protection	Thermal overload protector (TOP) internally connected
Protection class	I (with customer connection of protective earth)
Motor capacitor according to EN 60252-1 in safety protection class	S0
Conformity with standards	EN 60335-1; CE
Approval	CSA C22.2 No. 113; CCC; EAC; VDE; UL 507

ebm-papst Mulfingen GmbH & Co. KG · Bachmühle 2 · D-74673 Mulfingen · Phone +49 (0) 7938 81-0 · Fax +49 (0) 7938 81-110 · info1@de.ebmpapst.com · www.ebmpapst.com

AC axial compact fan

Product drawing

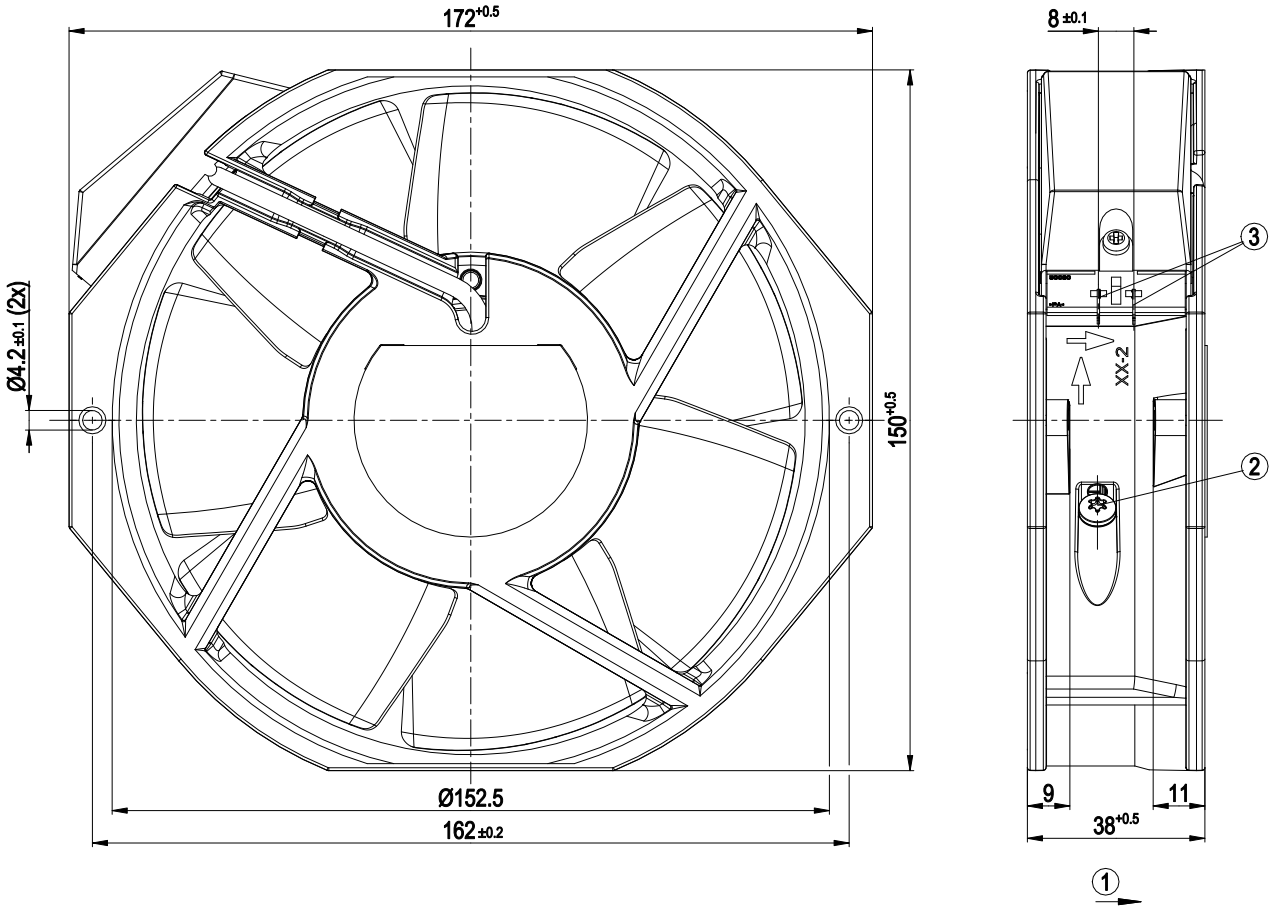

1	Airflow direction "V"
2	M4 screw for fastening ground connector
3	2x flat plug 2.8 x 0.5

Connection diagram

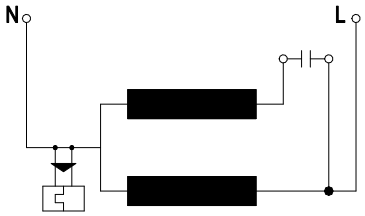

ebm-papst Mulfingen GmbH & Co. KG · Bachmühle 2 · D-74673 Mulfingen · Phone +49 (0) 7938 81-0 · Fax +49 (0) 7938 81-110 · info1@de.ebmpapst.com · www.ebmpapst.com

AC axial compact fan

Curves: Air performance 50 Hz

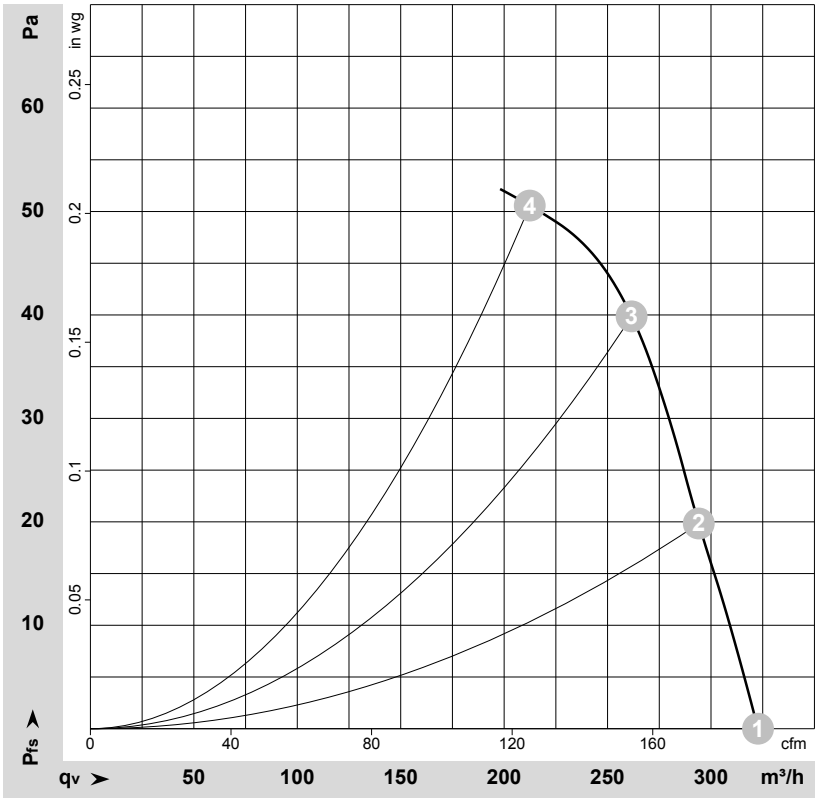

ρ = 1.15 kg/m³ ± 2 %

Measurement: LU-63820-1

Air performance measured according to ISO 5801 installation category A. For detailed information on the measurement setup, contact ebm-papst. Intake sound level: Sound power level according to ISO 13347 / sound pressure level measured at 1 m distance from fan axis. The values given are valid under the specified measuring conditions and may vary due to conditions of installation. For deviations from the standard configuration, the parameters have to be checked on the installed unit.

Measured values

	U	f	n	P_e	I	q_V	p_{fs}	q_V	p_{fs}
	V	Hz	min^{-1}	W	A	m^3/h	Pa	cfm	in. wg
1	230	50	2800	27	0.12	325	0	190	0.00
2	230	50	2805	26	0.12	295	20	175	0.08
3	230	50	2785	27	0.12	260	40	155	0.16
4	230	50	2775	27	0.12	210	50	125	0.20

U = Voltage · f = Frequency · n = Speed (rpm) · P_e = Power consumption · I = Current draw · q_V = Air flow · p_{fs} = Pressure increase

ebm-papst Mulfingen GmbH & Co. KG · Bachmühle 2 · D-74673 Mulfingen · Phone +49 (0) 7938 81-0 · Fax +49 (0) 7938 81-110 · info1@de.ebmpapst.com · www.ebmpapst.com

AC axial compact fan

Curves: Air performance 60 Hz

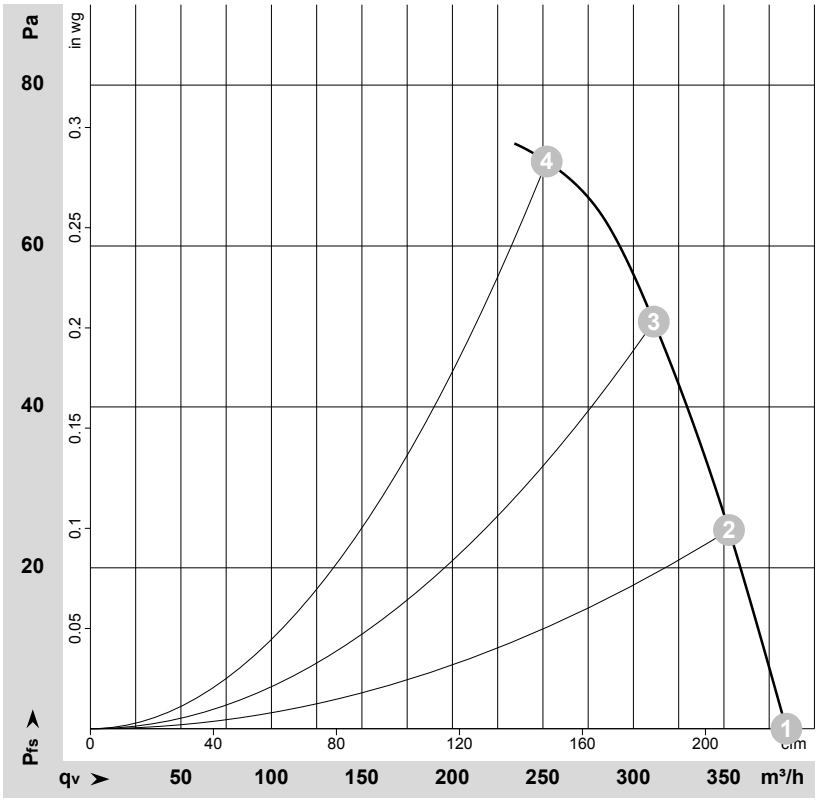

ρ = 1.15 kg/m³ ± 2 %

Measurement: LU-63821-1

Air performance measured according to ISO 5801 installation category A. For detailed information on the measurement setup, contact ebm-papst. Intake sound level: Sound power level according to ISO 13347 / sound pressure level measured at 1 m distance from fan axis. The values given are valid under the specified measuring conditions and may vary due to conditions of installation. For deviations from the standard configuration, the parameters have to be checked on the installed unit.

Measured values

	U	f	n	P_e	I	q_V	p_{fs}	q_V	p_{fs}
	V	Hz	min^{-1}	W	A	m^3/h	Pa	cfm	in. wg
1	230	60	3350	28	0.13	385	0	225	0.00
2	230	60	3305	30	0.13	355	25	210	0.10
3	230	60	3260	30	0.13	310	50	185	0.20
4	230	60	3230	31	0.14	250	70	150	0.28

U = Voltage · f = Frequency · n = Speed (rpm) · P_e = Power consumption · I = Current draw · q_V = Air flow · p_{fs} = Pressure increase

ebm-papst Mulfingen GmbH & Co. KG · Bachmühle 2 · D-74673 Mulfingen · Phone +49 (0) 7938 81-0 · Fax +49 (0) 7938 81-110 · info1@de.ebmpapst.com · www.ebmpapst.com