E21123

Quick-release

QUICK-RELEASE CLAMPS

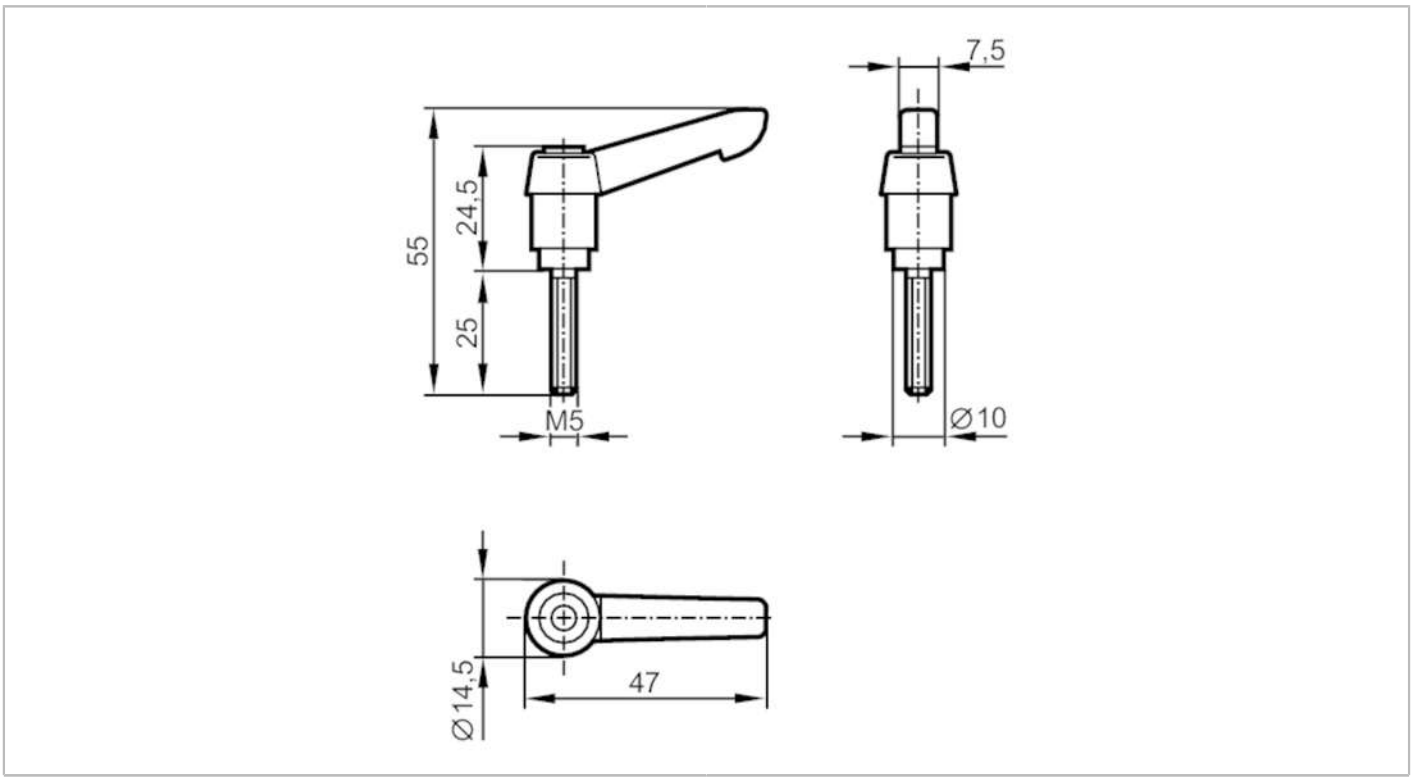

Application		
Design		For mounting clamps
Mechanical data		
Weight	[g]	31.5
Dimensions	[mm]	55 x 14.5 x 47
Materials		lever: plastics orange; steel black
Accessories		
Items supplied		spacer
Remarks		
Pack quantity		1 pcs.