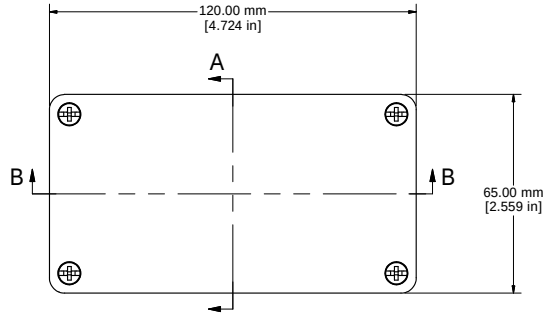

ASSEMBLY

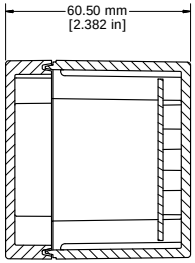

SECTION A-A

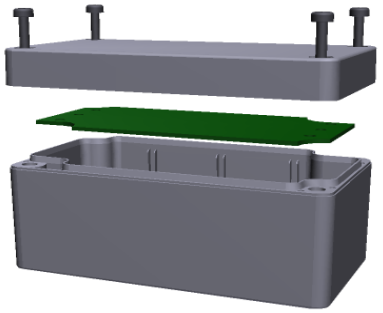

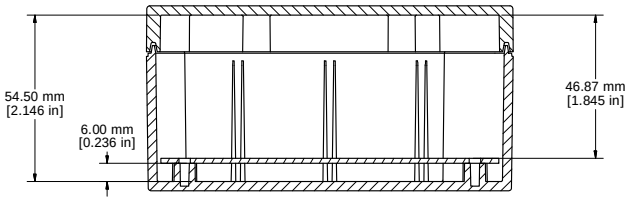

SECTION B-B

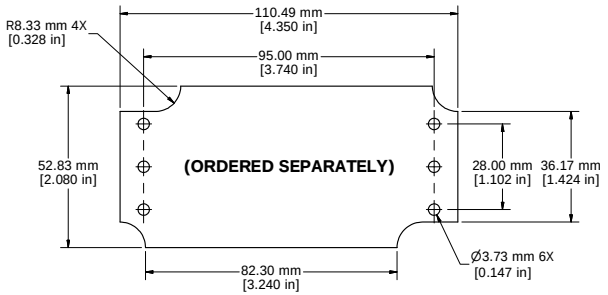

STEEL INNER PANEL

Polycarbonate Version Only

c UL us LISTED
File #E65324
NEMA 4, 4X

Enclosures can be Factory Modified (Milling, Drilling, Printing etc.)
Solid models of this enclosure available in STEP or IGES.
Contact Factory mjm@hammondmfg.com

NOTE
Purchased assembly includes box, lid, 4 cover screws, and preformed silicone gasket. General Purpose ABS version is not UL approved. (Matl UL94 - HB) Polycarbonate version is UL 508 approved. (Matl UL94 - V0)
Recommended Cover screw torque -- 2.5 lbf-in (30 cN-m)

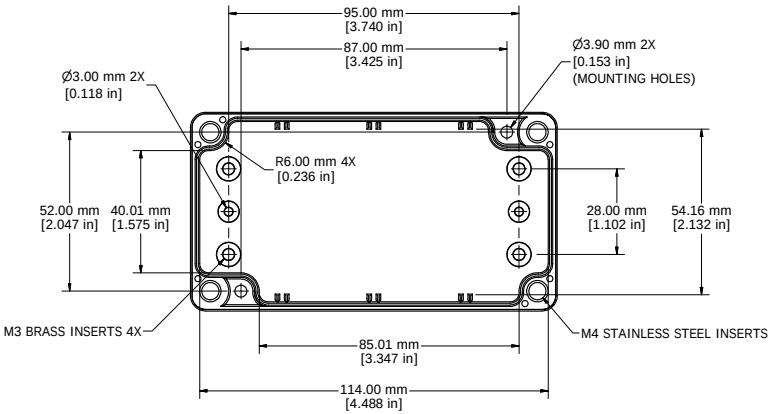

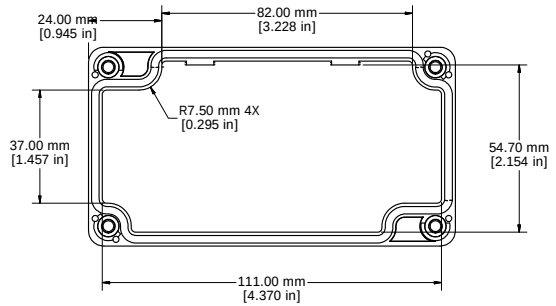

LID - INSIDE

1554D	
1554D Regular Enclosure	
General Purpose ABS RAL-7035	1554DGY
Polycarbonate RAL-7035	1554D2GY
1554D Clear / Smoke Lid Enclosure	
Polycarbonate Box / Clear Polycarbonate Lid	1554D2GYCL
Polycarbonate Box / Smoke Polycarbonate Lid	1554D2GYSL
ACCESSORIES	
Steel Inner Panels	1554CPL
Steel Panel / P.C. Board Machine Screw [M3 x 8mm Plated]	1591MM100
Steel Panel / P.C. Board Self Tapping Screw [#6 X 1/4" (6.4mm) Plated]	1598ATS100
Cover Screws (Pkg 4) [M4 X 20mm Stainless Steel]	SC1554

HAMMOND MANUFACTURING™

1554D

www.hammondmfg.com