31RC3548

EARTH LEAKAGE RELAY WITH 1 OPERATIN THRESHOULD, COMPACT PANEL MOUNT. CT INCORPORATED, 24-48VAC/DC



Product designation				Earth leakage relays
Product type designation				RC
General characteristics				
Description				Compact, 1 operating threshold
Control circut				
Toroidal transformer				Incorporated diam. 35mm/1.38"
Adjustments				
	Tripping set-point (IΔn)			
		(x0.1)	A	0.025...0.25
		(x1)	A	0.25…2.5
		(x10)	A	2.5...25
	Tripping delay time			
		(tx1)	s	0.02…0.5
		(tx10)	s	0.2...5
Selection of multiplier for IΔn and t				By dip switches
Resetting				Configurable automatic or manual by button on front
Test Button				Yes
Shunt circuit control				No
Auxiliary supply				
Auxiliary rated supply voltage Us				24-48VAC/DC
Output contacts				1
Rated frequency			Hz	50...60
Power consumption Max			VA	3
Relay outputs				
Relay state				Normally de-energised
Contact arrangement				1 changeover SPDT (trip)
Rated contact capacity IEC Ith				5A - 250VAC
Insulations				
Power frequency withstand voltage			kV	2.5kV for 60s
Indications				
Auxiliary voltage available (ON)				Green LED
Relay tripping (TRIP)				Red LED
Connections				
Terminals type				Fixed
Tightening torque for terminals				
		max	Nm	0.5

The characteristics described in this document are subject to updates or modifications at any time. The descriptions, technical and functional information, illustrations and instructions in this brochure are purely illustrative, and are consequently not contractually binding

		max	lbin	4.5
Conductor section				
	AWG/Kcmil			
		min		24
		max		12
	IEC			
		min	mm²	0.2
		max	mm²	2.5
Operations				
Mechanical life			cycles	50000000
Electrical life			cycles	300000
Ambient conditions				
Temperature				
	Operating temperature			
		min	°C	-10
		max	°C	+60
	Storage temperature			
		min	°C	-20
		max	°C	+80
Relative humidity			%	≤90%
Housing				
Material				Self-extinguishing polycarbonate
Mounting				35mm DIN rail
Degree of protection				IP20 terminals
Dimensions (W x H x D)			mm	100x110x70
Weight			g	485

Dimensions

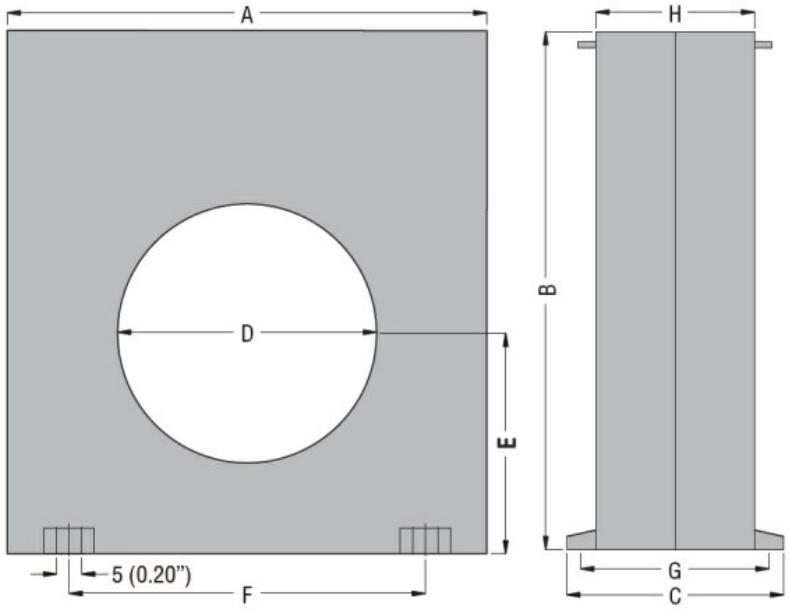

TYPE	A	B	C	D	E	F	G	H
RC35	100 (3.94")	110 (4.33")	70 (2.75")	35 (1.38")	47 (1.85")	60 (2.36")	60 (2.36")	50 (1.97")
RC60	100 (3.94")	110 (4.33")	70 (2.75")	60 (2.36")	47 (1.85")	60 (2.36")	60 (2.36")	50 (1.97")
RC80	150 (5.90")	160 (6.30")	70 (2.75")	80 (3.15")	70 (2.75")	110 (4.33")	60 (2.36")	50 (1.97")
RC110	150 (5.90")	160 (6.30")	70 (2.75")	110 (4.33")	70 (2.75")	110 (4.33")	60 (2.36")	50 (1.97")

Wiring diagrams

The characteristics described in this document are subject to updates or modifications at any time. The descriptions, technical and functional information, illustrations and instructions in this brochure are purely illustrative, and are consequently not contractually binding

31RC3548

EARTH LEAKAGE RELAY WITH 1 OPERATIN THRESHOULD, COMPACT PANEL MOUNT. CT INCORPORATED, 24-48VAC/DC

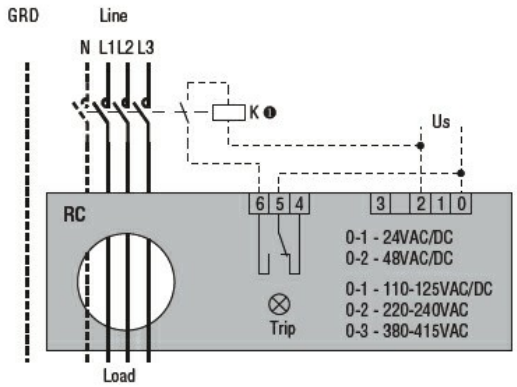

Certifications and compliance

Compliant with standards

IEC/EN 60947-2

Certificates

EAC

ETIM classification

ETIM 8.0

EC001445 - Residual current monitoring relay

The characteristics described in this document are subject to updates or modifications at any time. The descriptions, technical and functional information, illustrations and instructions in this brochure are purely illustrative, and are consequently not contractually binding