

93 Push-to-Close Latch

Push button to open

- **Push button opening**
- **Single hole installation**
- **Optional ejector spring helps prevent rattles**

Material and Finish

Latch: ABS, black
Spring: Stainless steel

Performance Details

Max. working load:
530 N (120 lbf)

Flammability rating: UL94-HB

Installation Notes

Max. tightening torque on mounting nut: 7.9 N·m (70 in·lbf)

Accessories

Flat key, keyed alike CH751
(2 keys per ring)
Part number: PK-10-01



Overmolded key, keyed alike CH751
(2 keys per ring)
Part number: PK-10-01-05



Pull tab (optional) part number:
In-line 93-21-301-14
Perpendicular 93-21-322-14

Keeper (replacement) part number:
93-14-101-24

Ejector spring (optional)
part number: 93-22-302-18

Part Number

See table

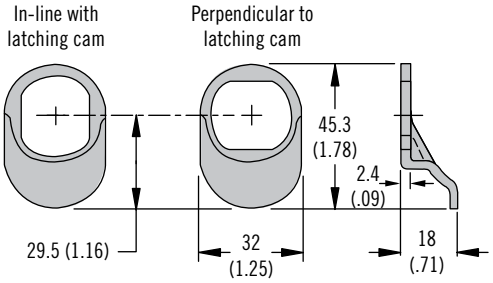

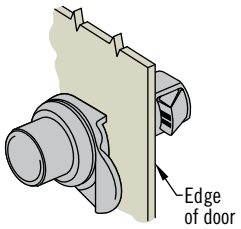

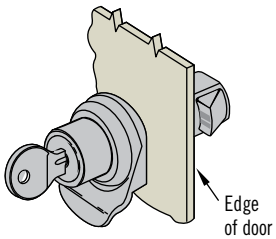

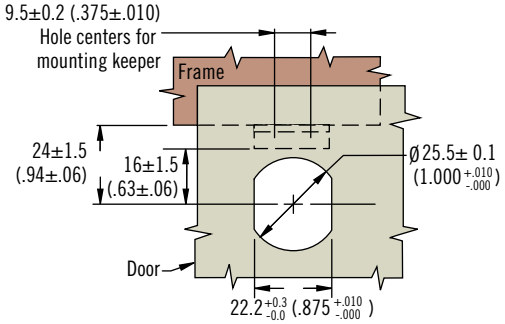

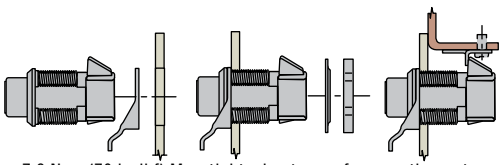

Style	Max. Door Thickness	G Grip	Dimensions			Latch Part Number	
			A	B	C Ref	Key-Locking (2 Flat Keys Supplied)	Non-Locking
Pull tab in-line with latching Cam	10.3 (.407)	$23^{+0.1}_{-.07}$ ($.907^{+0}_{-.032}$)	29.5±1.5 (1.16±.06)	14.5±1.5 (.57±.06)	37 (1.47)	93-303	93-304
Pull tab perpendicular to latching Cam	10.3 (.407)	$23^{+0.1}_{-.07}$ ($.907^{+0}_{-.032}$)	29.5±1.5 (1.16±.06)	14.5±1.5 (.57±.06	37 (1.47)	93-313	93-314
Latch only	12.7 (.500)	25±0.4 ($1.000^{+0}_{-.032}$)	32±1.5 (1.25±.06	17±1.5 (.66±.06)	40 (1.57)	93-307	93-308

Dimensions in millimeters (inch) unless otherwise stated

93 Push-to-Close Latch

Key actuated



Large

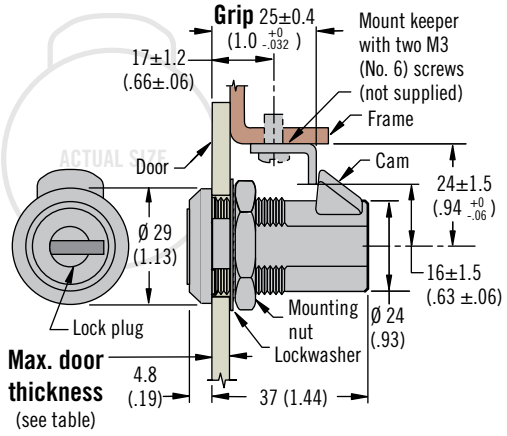

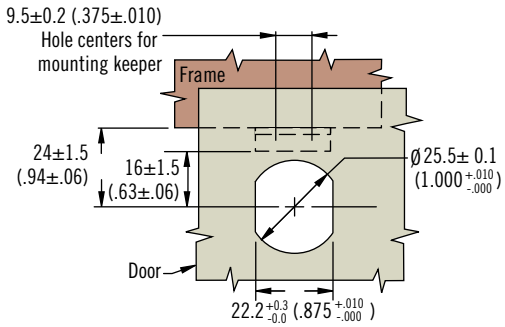

Small

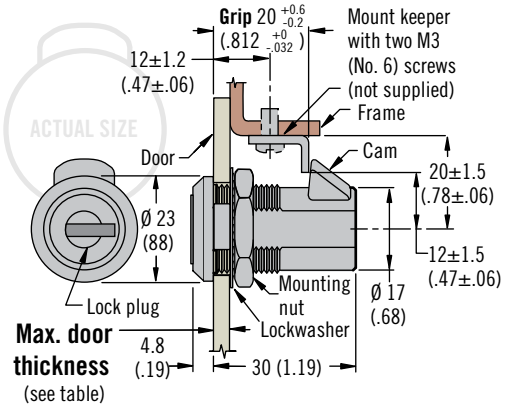

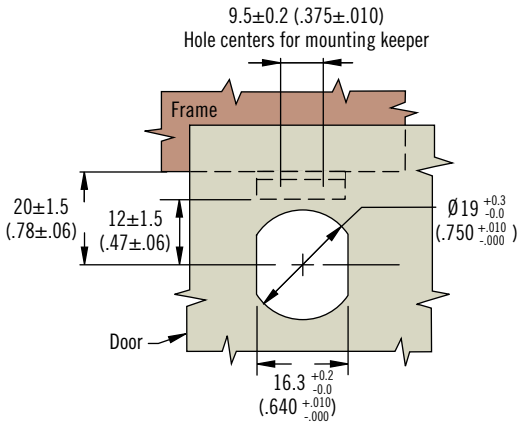

Sealing Cover (optional)

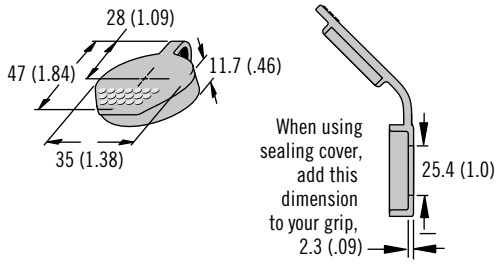

Sealing Cover (optional)

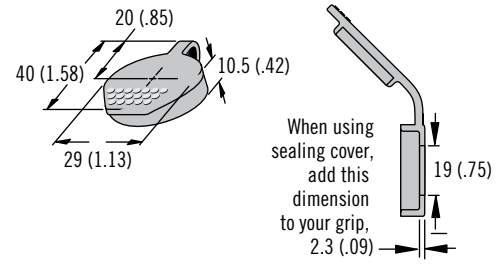

Size	Max. Door Thickness	Latch Part Number Locking Keyed Alike Ch751 (2 Flat Keys Supplied)	Lock Core Finish	Sealing Cover (Optional) Part Number
Large	12.7 (.500)	93-10-101-10	Bright	90-4
Small	9.5 (.375)	93-10-201-50	Black	90-2
		93-10-201-10	Bright	

- **Key only operation for access restriction**
- **Single hole installation**

Material and Finish

Latch: Zinc alloy, zinc plated or black powder coated

Performance Details

Max. working load:

Large: 560 N (125 lbf)

Small: 330 N (75 lbf)

Operating temperature range: -18ºC (0ºF) to 65ºC (150ºF)

Flammability rating: UL94-HB

Installation Notes

Max. tightening torque on mounting nut: 7.9 N·m (70 in·lbf)

Accessories

Flat key, keyed alike CH751
(2 keys per ring)
Part number: PK-10-01



Overmolded key, keyed alike CH751
(2 keys per ring)
Part number: PK-10-01-05



Pull tab (optional - large size only):
Part number:
In-line: 93-21-301-14
Perpendicular: 93-21-322-14

Keeper (replacement)
Part number: 93-14-101-11

Part Number

See table



93 Push-to-Close Latch

Turn-to-open · Knob style

- **Turn-to-open**
- **Single hole installation**

Material and Finish

Latch: Zinc alloy, zinc plated
Knob: Polycarbonate black

Performance Details

Max. working load:
Large: 560 N (125 lbf)

Small: 330 N (75 lbf)

Operating temperature range:
-18ºC (0ºF) to 65ºC (150ºF)

Flammability rating: UL94-HB

Installation Notes

Max. tightening torque on mounting nut: 7.9 N·m (70 in·lbf)

Accessories

Flat key, keyed alike CH751
(2 keys per ring)
Part number: PK-10-01



Overmolded key, keyed alike CH751
(2 keys per ring)
Part number: PK-10-01-05



Keeper (replacement)
Part number: 93-14-101-11

Part Number

See table

Large

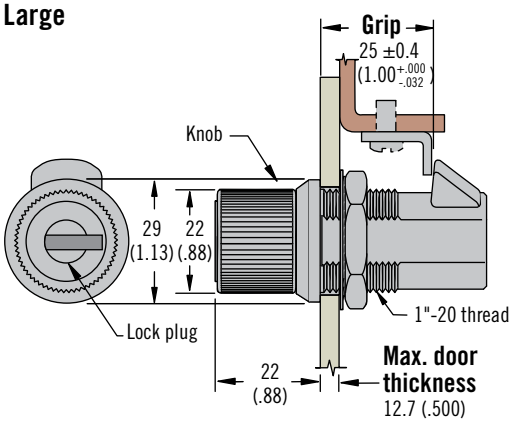

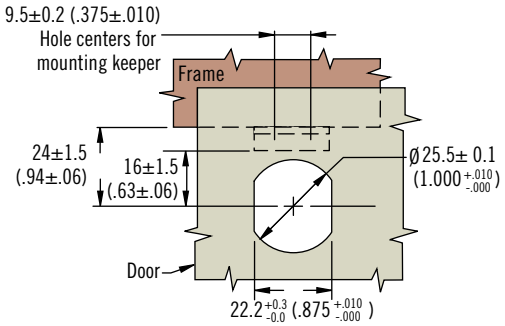

Small

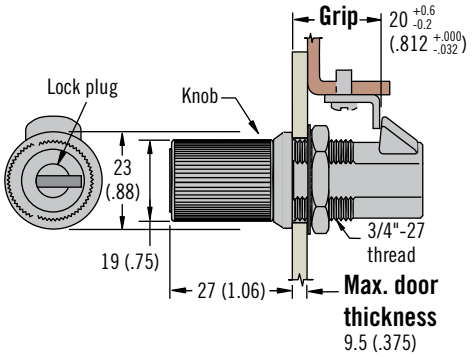

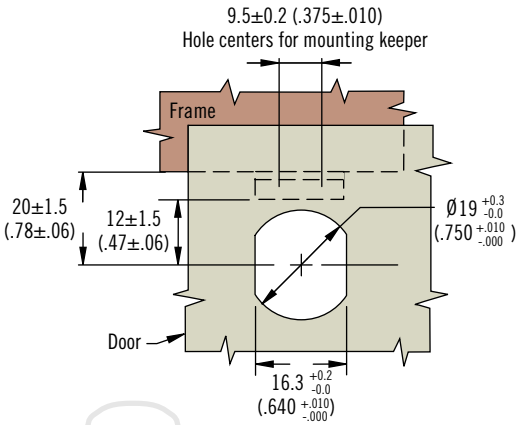

Size	Latch Part Number		Lock Core Finish
	Locking (2 Flat Keys Supplied)	Non-locking	
Large	93-10-102-50	93-10-103-50	Black
	93-10-102-10	93-10-103-10	Bright
Small	93-10-202-50	93-10-203-50	Black
	93-10-202-10	93-10-203-10	Bright

Dimensions in millimeters (inch) unless otherwise stated

93 Push-to-Close Latch

Turn-to-open · Wing style



- **Turn-to-open**
- **Single hole installation**

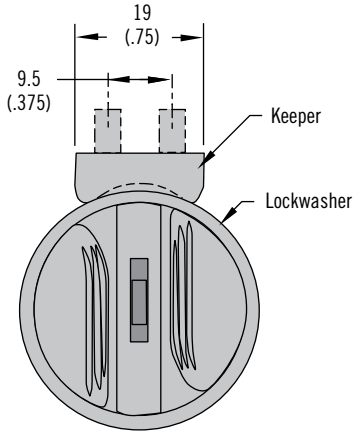

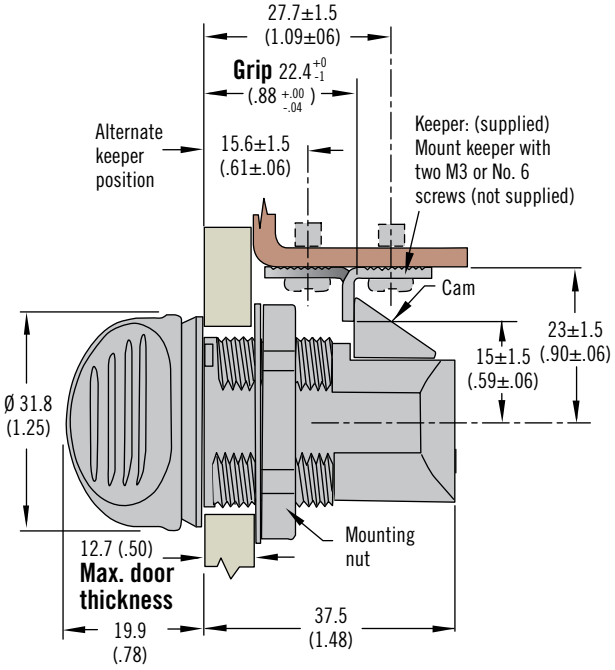

ACTUAL SIZE

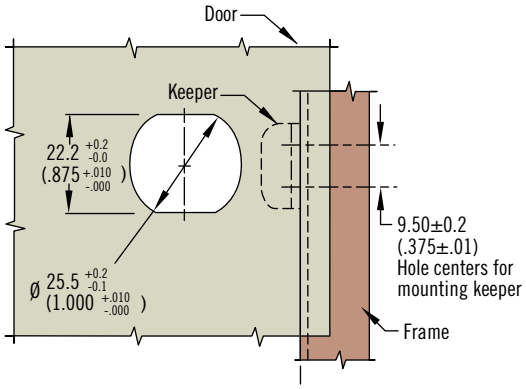

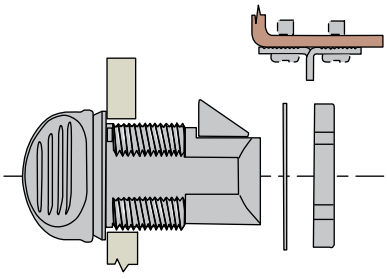

Latch Part Number (2 Flat Keys Supplied)
93-402

Material and Finish

Glass reinforced nylon and acetal, black

Performance Details

Max. working load:
425 N (100 lbf)

Operating temperature range:
-20ºC (0ºF) to 65ºC (150ºF)

Flammability rating: UL94-HB

Installation Notes

Max. tightening torque on mounting nut: 6 N·m (53 in·lbf)

Accessories

Flat key, keyed alike CH751
(2 keys per ring)
Part number: PK-10-01



Overmolded key, keyed alike CH751
(2 keys per ring)
Part number: PK-10-01-05



Keeper (replacement):
Part number: 93-14-101-24

Part Number

See table

Dimensions in millimeters (inch) unless otherwise stated