E21140

Ethernet connection adapter

INDUSTR.ETHERN.ADAPT.M12/RJ45

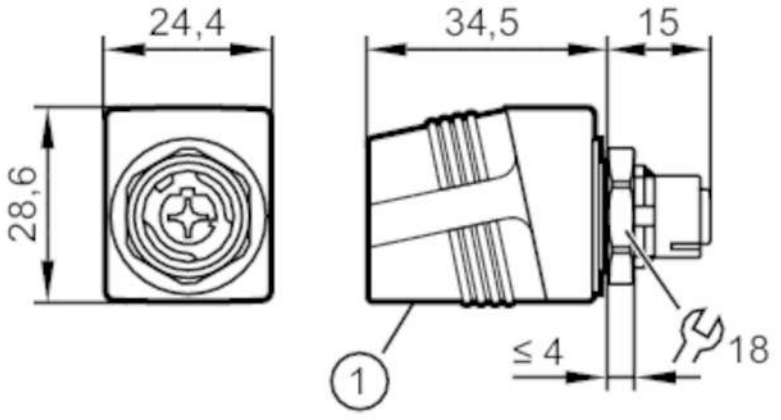

Application		
Design		Ethernet cable, D-coded
Operating conditions		
Ambient temperature	[°C]	-25...85
Protection		IP 65; IP 67
Mechanical data		
Weight	[g]	47.5
Remarks		
Pack quantity		1 pcs.
Electrical connection - socket		

Connector: 1 x M12, angled; coding: D

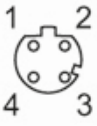

E21140

Ethernet connection adapter

INDUSTR.ETHERN.ADAPT.M12/RJ45

Electrical connection

Connection

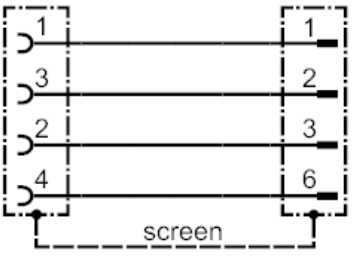

Electrical connection - socket

Connector: 1 x RJ45, angled

