OJ5058

Laser diffuse reflection sensor

OJHLFPKG/SO/AS

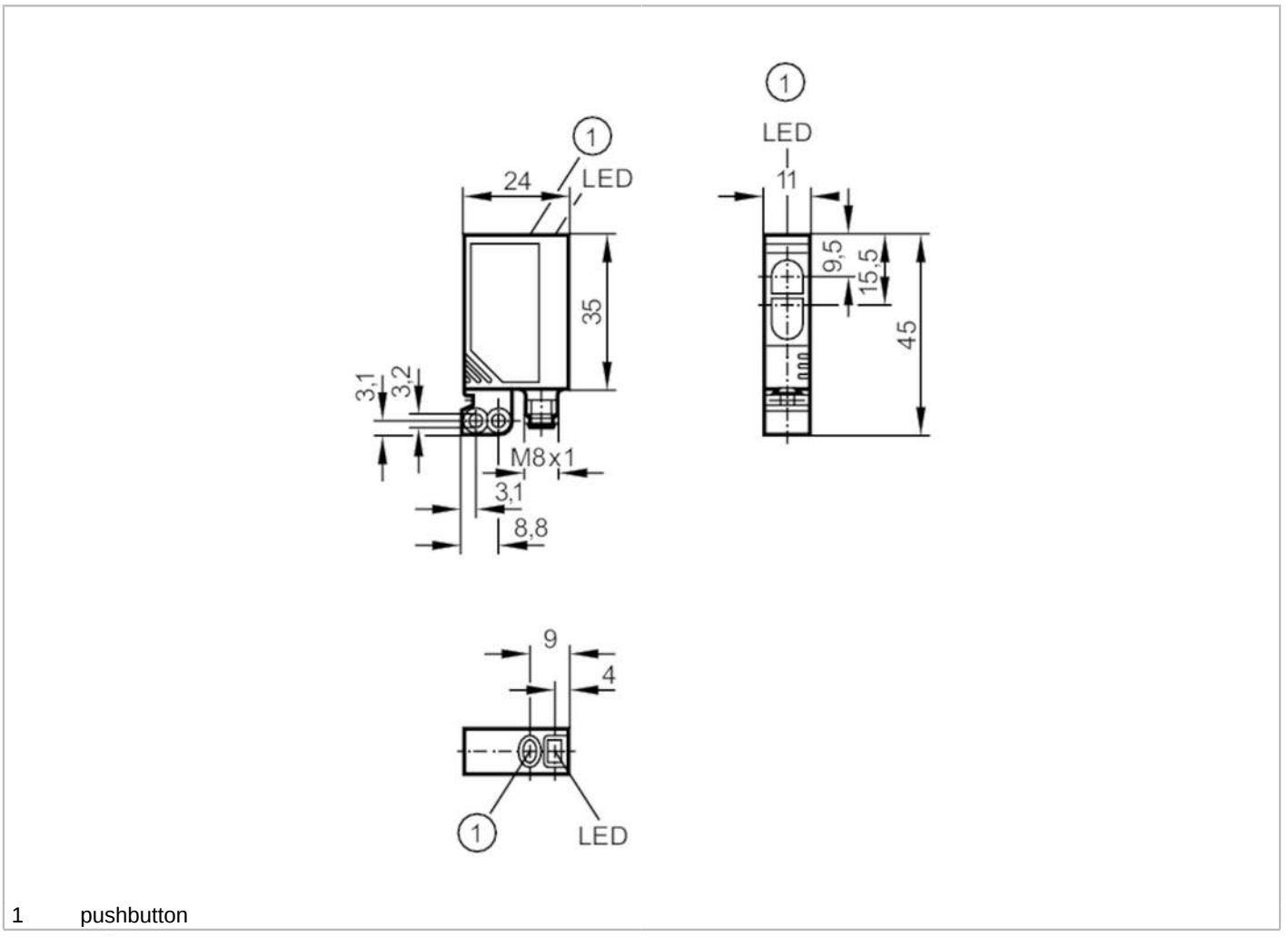

1 pushbutton

Product characteristics		
Type of light		red light
Laser protection class		1
Housing		rectangular
Application		
Special feature		Background suppression
Function principle		Diffuse reflection sensor
Electrical data		
Operating voltage	[V]	10...30 DC
Current consumption	[mA]	13
Protection class		III
Reverse polarity protection		yes
Type of light		red light
Wave length	[nm]	650
Typ. lifetime	[h]	50000

OJ5058

Laser diffuse reflection sensor

OJHLFPKG/SO/AS

Outputs		
Electrical design		PNP
Output function		light-on/dark-on mode; (programmable)
Max. voltage drop switching output DC	[V]	2.5
Permanent current rating of switching output DC	[mA]	200
Switching frequency DC	[Hz]	1000
Short-circuit protection		yes
Type of short-circuit protection		pulsed
Overload protection		yes
Detection zone		
Range	[mm]	7...150; (white paper 200 x 200 mm 90% remission)
Range on white object (90 % remission)	[mm]	7...150
Range on grey object (18 % remission)	[mm]	7...55
Range on black object (6 % remission)	[mm]	7...36
Range adjustable		yes
Diameter of the smallest detectable object	[mm]	0.8
Max. light spot diameter	[mm]	0.8
Background suppression available		yes
Operating conditions		
Ambient temperature	[°C]	-10...60
Protection		IP 67
Tests / approvals		
EMC		EN 60947-5-2
Laser protection class		1
Notes on laser protection		Caution: laser light
		laser class: 1
		EN / IEC60825-1:2007
		EN / IEC60825-1:2014
		Complies with 21 CFR 1040 except for deviations pursuant to Laser Notice No. 50, dated June 2007.
MTTF	[years]	501
Mechanical data		
Weight	[g]	27.75
Housing		rectangular
Dimensions	[mm]	35 x 11 x 24
Materials		housing: ABS; fixture: diecast zinc; LED window: SEPS; pushbutton: SEPS
Lens material		PMMA
Lens alignment		side lens

OJ5058

Laser diffuse reflection sensor

OJHLFPKG/SO/AS

Displays / operating elements		
Display	switching status	1 x LED, yellow
	operation	1 x LED, green
Electronic lock	yes	
Accessories		
Items supplied	Basic clip: 1, E20964	
	screws: 2 x M3 x 16	
	spring washers: 2	
	Nuts: 2	
Remarks		
Remarks	operating voltage "supply class 2" according to cULus	
Pack quantity	1 pcs.	

Electrical connection

Connector: 1 x M8; coding: A



Connection

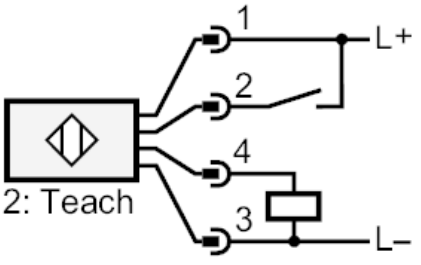

2	Teach

OJ5058

Laser diffuse reflection sensor

OJHLFPKG/SO/AS

Diagrams and graphs

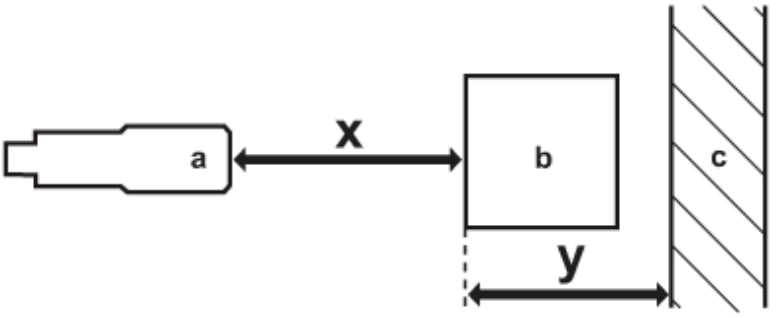

a: sensor

b: object

c: background

x: distance sensor/object [mm]

y: min. distance object/background [mm]

accuracy graph

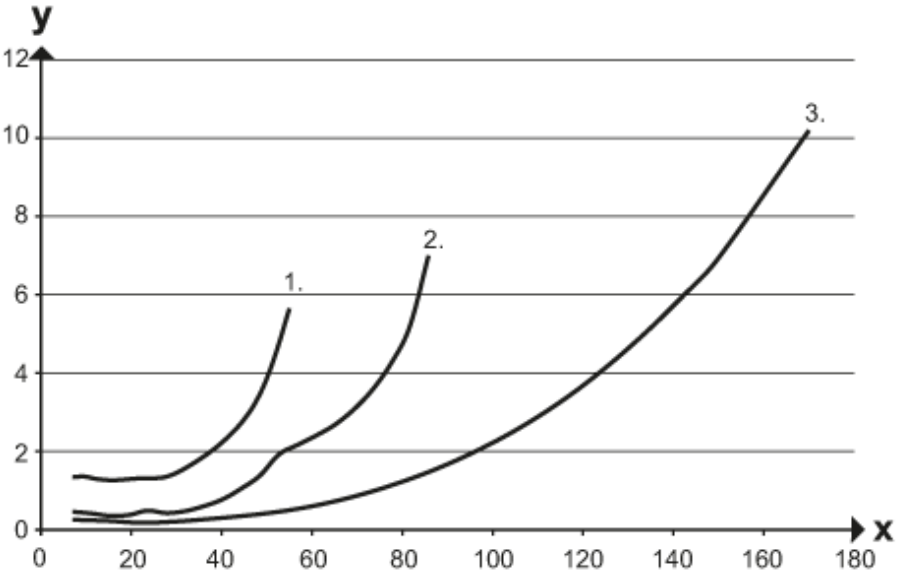

x: distance sensor/object [mm]

y: min. distance object/background [mm]

1 = object black (6 % remission) , background white (90 % remission)

2 = object grey (18 % remission) , background white (90 % remission)

3 = object white (90 % remission) , background white (90 % remission)