268 HANDHELD CASES
292 UNIVERSAL ENCLOSURES
318 HEAVY DUTY AND ELECTRICAL ENCLOSURES
342 DESKTOP AND INSTRUMENT CASES
348 DEVELOPMENT BOARD ENCLOSURES
367 ROOM SENSOR ENCLOSURES
370 CUSTOM SIZED ENCLOSURES

2910 series plastic handheld enclosures

Product overview

Functional hand-held ABS cases with recessed lid and a battery compartment.

- Lid and base moulded in high grade ABS
- Lid secured by four M3 machine screws
- Snap-on battery compartment lid
- Battery compartment with space for two AA, AAA or one PP3 battery
- PCB pillars in base
- Recess in lid for membrane keypads or overlays
- 2910 series has been designed to meet the requirements of IP54

CHHMC0





SPECIFICATION	
Materials	Base and lid and battery lid in high grade ABS UL94-V0
Operating temperature	Resistant to temperatures of up to 80°C
Protection class	2910 series has been designed to meet the requirements of IP54
Standard colours	Light grey similar to RAL 7035 or black similar to RAL 9004
Standard unit includes	Base and lid Battery compartment lid 4 x M3 machine screws 4 x self-tapping PCB screws

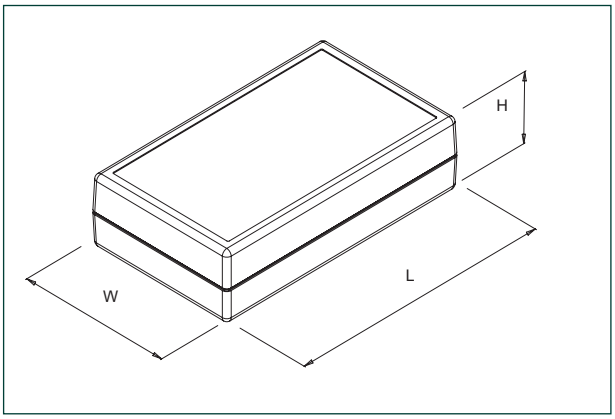

BLACK	GREY	LENGTH	WIDTH	HEIGHT
CHHMC01BK	CHHMC01GY	105mm	61mm	28mm
CHHMC02BK	CHHMC02GY	145mm	80mm	34mm

KEY FEATURES

High grade ABS | Battery compartment | PCB pillars





+44 (0)1638 716101 | sales@camdenboss.com | www.camdenboss.com

We operate a constant improvement policy, our products are subject to change without notice.

Vers 1

bsi. ISO 9001 Quality Management FM 28614 ISO 14001 Environmental Management EMS 613558