BExL15 Explosion Proof PA Loudspeakers 15W

The flameproof BExL15 PA loudspeakers are suitable for Zone 1, 2, 21 & 22 applications. Approved to IECEx, ATEX, Ex EAC and INMETRO standards.

113dB sound level output – 15W rated.
The BEx range features enclosures manufactured from corrosion proof, marine grade copper free LM6 aluminium with chromate and powder coat finish.
An independent test report is available on request, or online, detailing the leading performance of the BEx loudspeaker range.

Features

- Marine grade, corrosion proof, LM6 aluminium enclosure.
- Ingress protection IP66/67
- Stainless steel fixings
- Dual M20 cable entries – adaptors available.
- Stopping plug included.
- Very large termination area.
- Ratchet adjustable stainless steel 'U' bracket.
- 100V and 70V line versions.
- 8 Ohm and 16 Ohm low impedance versions.
- Multiple tappings from 15W to 1W.
- Wide frequency response and angle of dispersion.



Approvals

- IECEx KEM 10.0003X
- ATEX KEMA 99ATEX6312X
- TR-CU Ex EAC certificate: RU C-GB.AA71.B.00109
- INMETRO certificate: 10-IEx-0009

Coding

- II 2G Ex d IIB T4 Ta -50° to +70°C
- II 2G Ex d IIC T4 Ta -50° to +55°C
- II 2D Ex tb IIIC T100°C Db Ta -50°C to +55°C
- II 2D Ex tb IIIC T115°C Db Ta -50°C to +70°C

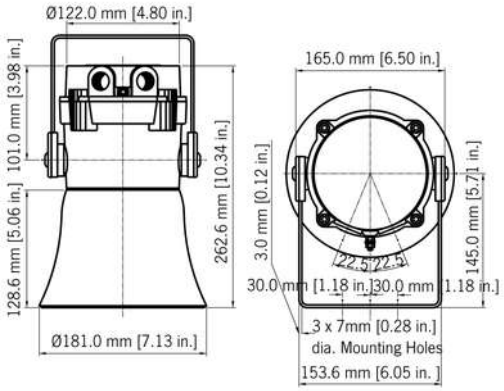

Specification

SPL:	102dB +/-3dB @ 1w @ 1m (Pink) 113dB +/-3dB @ 15w @ 1m (Rated)
Rated power:	15 Watts RMS
70v line tappings:	15w / 7.5w / 3w / 1w (z=336.67 Ohms /653.33 Ohms / 1.6k Ohms / 4.9k Ohms)
100v line tappings:	15w / 7.5w / 3w / 1w (z=666.87 Ohms /1.34k Ohms / 3.34k Ohms / 10k Ohms)
Low impedence:	8 Ohm or 16 Ohm
Dispersion:	120° @ 1kHz & 32° @ 4kHz
Frequency range:	400Hz to 8000 Hz
DC Line monitoring:	2.2µF Capacitor (Transformer) 470µF Capacitor (Low impedance)
Ingress protection:	IP66/67
Enclosure matl:	Marine grade copper free LM6 Aluminium
Enclosure finish:	Chromate & powder coated finish – anti-corrosion.
Colour:	RAL3000 Red Grey RAL7038 Special – available on request
BExL15 flare:	High impact UL94 V0 & 5VA FR ABS
Cable entries:	Dual M20 ISO (one stopping plug inc)
Terminals:	0.5 – 2.5mm² (20-14 AWG)
Relative humidity:	95% – Additional tropicalisation is recommended for applications where both high relative humidity and high ambient temperatures exist
Weight:	70/100V line: 3.45kg/7.59lbs Low imp.: 3.10kg/6.82lbs

Part Codes

Version:	Part code:	
Product type:	BExL15	Explosion proof PA Loudspeaker
Type:	DF	Ex d, Flare re-entrant horn
Input:	V100	100V Line Transformer
	V070	70V Line Transformer
	R016	16 Ohm Low Impedance
	R008	8 Ohm Low Impedance
Cable Entry Type: [e]	A	2 x M20x1.5mm
	B	2 × 1/2" NPT – adaptors
	C	2 × 3/4" NPT – adaptors
	D	2 x M25x1.5mm – adaptors
	E	1 × 1/2" NPT – adaptor
	F	1 × 3/4" NPT – adaptor
	G	1 x M25x1.5mm – adaptor
Adaptor/Stopping plug material: [m]	B	Brass
	N	Nickel Plated
	S	Stainless Steel
Bracket matl & tag: [s]	1	A2 304 Stainless Steel
	2	A4 316 Stainless Steel
	3	A2 304 St/St with Equip. Tag
	4	A4 316 St/St with Equip. Tag
Product version: [v]	A1	Default – IECEx, ATEX, Ex EAC & INMETRO
Enclosure colour: [x]	R	Red RAL3000
	G	Grey RAL7038
	S	Special – contact E2S
Accessories:	SP65-0001-A2	Pole Mount Bracket Kit 2" St/St A2 (304)
	SP65-0001-A4	Pole Mount Bracket Kit 2" St/St A4 (316)
	SP65-0003-A2	Sunshade – St/St A2 (304)
	SP65-0003-A4	Sunshade – St/St A4 (316)

No liability is accepted for any consequence of the use of this document. The technical specification of this unit is subject to change without notice due to our policy of continual product development. All dimensions are approximate. This unit is sold subject to our standard conditions of sale, a copy of which is available on request.