Double-Ended Cordsets

# BCC M415-M415-3A-313-PX0534-010
# Order Code: BCC09FZ

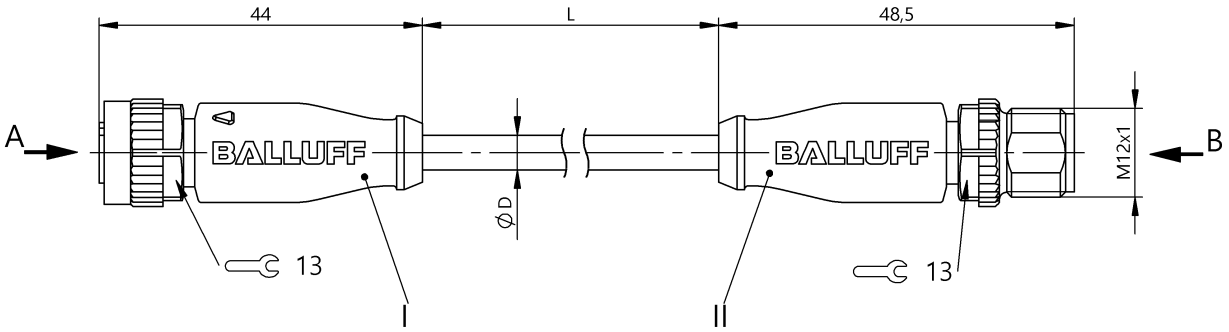


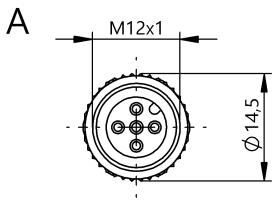


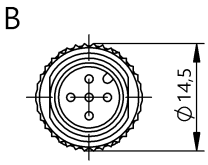


## Basic features

| | |
|---|---|
| **Approval/Conformity** | CE<br>EAC<br>WEEE |

## Electrical connection

| | |
|---|---|
| **Bending radius min., fixed cable** | 5 x D |
| **Bending radius min., flexible cable** | 10 x D |
| **Cable** | PUR black, 1 m, drag chain compatible |
| **Cable diameter D** | 5.00 mm ±0.20 mm |
| **Cable, bending cycles min.** | 2 mil. |
| **Conductor cross-section** | 0.34 mm² |
| **Connection 1** | M12x1-Female, Straight, 5-pin, A-coded |
| **Connection 2** | M12x1-Male, Straight, 5-pin, A-coded |
| **Number of conductors** | 5 |
| **System** | Molded/Molded |

## Electrical data

| | |
|---|---|
| **Operating voltage Ub** | 60 VDC / 60 VAC |
| **Rated current (40 °C)** | 4.0 A |

## Environmental conditions

| | |
|---|---|
| **Cable temperature UL max., fixed routing** | 80 °C |
| **Cable temperature UL max., flexible routing** | 80 °C |
| **Cable temperature, drag chain** | -25...60 °C |
| **Cable temperature, fixed routing** | -50...90 °C |
| **Cable temperature, flexible routing** | -25...90 °C |
| **IP rating** | IP67, IP68, IP69K/IP67, IP68, IP69K |

## Interface

| | |
|---|---|
| **Switching output** | Complementary |

## Material

| | |
|---|---|
| **Cable jacket, material** | PUR |
| **Material contact carrier** | PUR/PUR |
| **Material contacts** | Bronze/Brass |
| **Material cover nut** | Die-cast zinc/Die-cast zinc |
| **Material grip** | PUR/PUR |

## Mechanical data

| | |
|---|---|
| **Acceleration max., drag chain** | 5 m/s² |
| **Cable jacket, color** | black |
| **Cable length L** | 1.00 m |
| **Cable properties** | drag chain compatible |
| **Horizontal travel permitted, drag chain** | 5 m |
| **Tightening torque pigtail** | 0.6 Nm/0.6 Nm |
| **Traverse speed max., drag chain** | 200 m/min |
| **Vertical travel permitted, drag chain** | 5 m |

# BCC M415-M415-3A-313-PX0534-010
# Order Code: BCC09FZ

## Remarks

Cable construction acc. to UL-AWM Style 20549
Halogen-free per DIN VDE 0472 Part 815
Silicone-free
Flame-retarding acc. to IEC 60332-2
Enclosure rating per IEC 60529 or 20653, only in screwed state with the associated mating piece.

## Connector Drawings

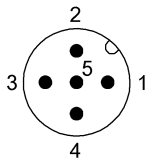


II

PIN 1: brown
PIN 2: white
PIN 3: blue
PIN 4: black
PIN 5: green/yellow

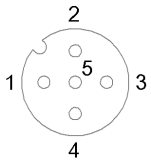


I

PIN 1: brown
PIN 2: white
PIN 3: blue
PIN 4: black
PIN 5: green/yellow

## Wiring Diagrams

